E

DIRECTIONAL CONTROLS

Solenoid Operated Directional Valves ..... Page 331

Solenoid Controlled Pilot Operated Directional Valves ..... Page 331

"G" Series Shockless Type Directional Valves ..... Page 331

Pilot/Manually/Mechanically Operated Directional Valves ..... Page 331

Poppet Type Directional Valves ..... Page 451

Check/Pilot Controlled Check Valves ..... Page 497

Directional Valves

These valve are used for shifting oil flow direction of hydraulic circuit and for actuator starting/stopping as well as the operating direction shifting of actuator.

Solenoid Operated Directional Valves

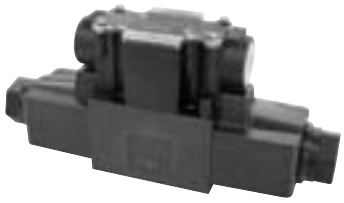

Solenoid Controlled Pilot Operated Directional Valves

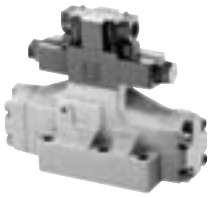

"G" Series Shockless Type Directional Valves

Pilot/Manually/Mechanically Operated Directional Valves

Poppet Type Directional Valves

Check/Pilot Controlled Check Valves

Hydraulic Fluids

1. Type of Fluids

Any type of hydraulic fluid, listed in the table below can be used.

Type of Fluids	Remarks
Petroleum Base Oils	Use fluids equivalent to ISO VG32 or VG46.
Synthetic Fluids [1)]	Use phosphate ester or polyol ester type. When phosphate ester type fluid is to be used, prefix "F-" to the model number because a special seal (fluororubber) will be used.
Water Containing Fluids	Use water-glycol fluids or W/O emulsion type fluids.

Notes 1: Not applicable with G-DSG and G-DSHG series valves.
2: For two types of manually operated directional valves, DMT-$\frac{06}{06X}$ and DMT-$\frac{10}{10X}$, only petroleum base oils and polyol ester type fluids are available.
3: Water-glycol fluids cannot be used for two types of solenoid operated poppet type two-way valves; CDST-03✻ and CDSG-03 types.
4: For use with hydraulic fluids other than those listed above, please consult your Yuken representatives is advance.

2. Recommended Viscosity and Oil Temperatures

Use hydraulic fluids which satisfy the both recommended viscosity and oil temperatures given in the table below.

Name	Viscosity	Oil Temperature
DSG-005 series Solenoid Operated Directional Valves	20 – 200 mm²/s (100 – 900 SSU)	–15 – +60°C (5 – 140°F)
Solenoid Operated Directional Valves Solenoid Controlled Pilot Operated Directional Valves Poppet Type Solenoid Operated Directional Valves Multi Purpose Control Valves Solenoid Operated Poppet Type Two-Way Valves Pilot Controlled Directional Valves Manually Operated Directional Valves Mechanically Operated Directional Valves Check Valves Pilot Controlled Check Valves	15 – 400 mm²/s (80 – 1800 SSU)	–15 – +70°C (5 – 160°F)
G Series Shockless Type Solenoid Operated Directional Valves (Shifting Time Adjustable)	15 – 200 mm²/s (80 – 900 SSU)	–15 – +60°C (5 – 140°F)

3. Control of Contamination

Due caution must be paid to maintaining control over contamination of the hydraulic fluids which may otherwise lead to breakdowns and shorter the life of the valve. Please maintain the degree of contamination within NAS 1638-Grade 12. Use 25 µm or finer line filter (In case of DSG-005 series Solenoid Operated Directional Valves, NAS1638-Grade 11. Use 20 µm or finer line filter).

Water-proof, dust-proof and vibration-resistance

There properties are in compliance with the following standards.
(The marking of ○ indicates compliance)

Item	Standard	Type	Description		Compliance					
					DSG-005	(S-/T-/L-)DSG-01 DSHG-01 DSHG-03 (S-)DSHG-04 (S-)DSHG-06 (S-)DSHG-10	E-DSG-01 (S-/E-/T-/L-) DSG-03	G-DSG-01 G-DSG-03 G-DSHG-04 G-DSHG-06	DSLG DSLHG DSP✻	CDS✻
★2 Water-proof	**JIS F8001** Water-proof test for marine electric appliance	Class 1 water spray	Drip-proof construction		○	○	○	○	○	○
		Class 2 water spray	Froth-roof construction		×	○	○	○	○	○
	JIS D0203 Damp-proof and Water-proof test for automobile parts	Damp-proof test M1	Test to examine damp-resistance of parts		×	○	○	○	○	○
		Damp-proof test M2	Test to examine functions of part under high temperature and high humidity		×	○	○	○	○	○
		Splash-proof test R1	Test to examine functions of parts which are likely to be exposed to water splash.		○	○	○	○	○	○
		Splash-proof test R2	Test to examine functions of parts which are indirectly exposed to stormy weather or water splash.		×	○	○	○	○	○
	JIS C0920 Water-proof test for electro-mechanical parts an wiring materials	Drip-proof type	Not affected by water dropping at vertical angle of 15 degrees or less.		○	○	○	○	○	○
		Rain-proof type	Not affected by rain fall at vertical angle of 60 degrees or less.		×	○	○	○	○	○
		Froth-proof type	Not affected by water drip from any dirction.		×	○	○	○	○	○
		Jet-flow proof type	Not affected by jet flow from any direction.		×	○	×	×	×	×
	(I.E.C) PUBL. 529	Protection Class 2: Drip-proof type (2)	Not affected by water drip falling at vertical angle of 15 degrees or less.		○	○	○	○	○	○
		Protection Class 3: Rain-proof type	Not affected by rain falling at vertical angle of 60 degrees or less.		×	○	○	○	○	○
		Protection Class 4: Froth-proof type	Not affected by water drip from any direction.		×	○	○	○	○	○
		Protection Class 5: Jet-flow proof type	Not affected by jet flow from any direction.		×	○	×	×	×	×
Dust-proof	(I.E.C) PUBL. 529	Protection Class 6	Fully protected from entry of dust.		○	○	○	○	○	○
Vibration-resistance	**JIS C0911** Vibration test for small electric appliances	Resonace test (IC)	Vibration range: 7-59.5 Hz Duplex amplitude: 0.1 mm		×	○	○	○	○	○
		Fixed frequency resistance test (IIC)	Frequence: 20 Hz	Grade 1: duplex amplitude-0.5 mm	×	○	○	○	○	○
				Grade 2: duplex amplitude-1.2 mm	×	○(2D✻)★1	○(2D✻)★1	○ ★1	○	○
				Grade 3: duplex amplitude-1.8 mm	×	○(2D✻)★1	○(2D✻)★1	○ ★1	○	○
				Grade 4: duplex amplitude-2.4 mm	×	○(2D✻)★1	○(2D✻)★1	○ ★1	○	○
		Variable frequency resistance test (IIIC)	Frequency range: 7-59.5 Hz	Grade 1: duplex amplitude-0.3 mm	×	○(2D✻)★1	○(2D✻)★1	○ ★1	○	○
				Grade 2: duplex amplitude-0.5 mm	×	○(2D✻)★1	○(2D✻)★1	○ ★1	○	×
				Grade 3: duplex amplitude-0.75 mm	×	○(2D✻)★1	○(2D✻)★1	○ ★1	○	×
	JIS D1601 Vibration test for automobile parts	Class 1: mainly for parts of passenger car	Grade A: Parts mounted on spring of body or chassis having relatively low vibration.		×	○(2D✻)★1	○(2D✻)★1	○	○	×
			Grade B: Parts mounted on spring of body or chassis having relatively low vibration.		×	○(2D✻)★1	○(2D✻)★1	○	○	×
			Grade C: Parts mounted in engine having relatively low vibration		×	○(2D✻)★1	○(2D✻)★1	×	○	×

★1 : No-spring detented type (2D✻) and No-spring type (2N✻) can be used when energised continous for position holding.
★2 : For outdoor use, protect equipment with a cover, etc., to prevent direct exposure to water.

Solenoid Operated Directional Valves
Solenoid Controlled Pilot Operated Directional Valves
"G" Series Shockless Type Directional Valves
Pilot / Manually / Mechanically Operated Directional Valves

Valve Type	Graphic Symbols	Max. Operating Pressure MPa (PSI)	Maximum Flow (U.S.GPM / L/min)	Page
Solenoid Operated Directional Valves		25 (3600)	DSG−005	336
		16 (2320)	L−DSG−01	344
		25 (3600)	S−DSG−01	
		35 (5080)	DSG−01	
		16 (2320)	L−DSG−03	361
		25 (3600)	S−DSG−03	
		31.5 (4580)	DSG−03	
Low Wattage (5W) Type Dolenoid Operated Directional Valves		16 (2320)	E−DSG−01	378
			E−DSG−03	
Electronic Relay Incorporated Solenoid Operated Directional Valves		25 (3600)	T−S−DSG−01	379
		35 (5080)	T−DSG−01	
		25 (3600)	T−S−DSG−03	379
		31.5 (4580)	T−DSG−03	
Solenoid Controlled Pilot Operated Directional Valve		21 (3050)	DSHG−01	381
		25 (3600)	DSHG−03	
		31.5 (4580)	DSHG−04/S−DSHG−04	
			DSHG−06/S−DSHG−06	
			DSHG−10/S−DSHG−10	
"G" Series Shockless Type Solenoid Operated Directional Valves		25 (3600)	G−DSG−01	412
			G−DSG−03	
"G" Series Shockless Type Solenoid Controlled Pilot Operated Directional Valves		25 (3600)	G−DSHG−04	418
			G−DSHG−06	
Pilot Operated Directional Valves		31.5 (4580)	DHG−04 06 10	423
Manually Operated Directional Valves		21 (3050)	Threaded Connection (DMT) 03 06 10	429
		31.5 (4580)	Sub-plate connection (DMG) 01 03 04 06 10	
Mechanically Operated Directional Valves		7 (1020)	Rotary (DR T/G) 02	441
		25 (3600)	Cam Operated (DC T/G) 01 03	

Spool Types

Spool types are classified to the condition of flow at the neutral position.

Spool Type	Graphic Symbols	Schematic Drawing (Centre Position)	Functions and Applications
2 (Closed Centre All Ports)	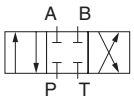	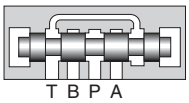	Holds pump pressure and cylinder position at neutral. Care should be paid if used as a 2-position type because shock occurs when each port is blocked in transit.
3 (Open Centre All Ports)	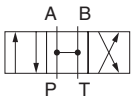	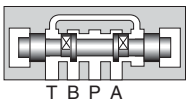	Pump can be unloaded and actuator is floating at neutral. If a 2-position type is used, shock is reduced as each ports is released to tank in transit.
4 (Open Centre A, B&T)	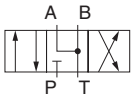	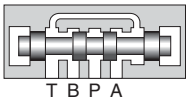	Pump pressure is held and actuator is floated at neutral. 2-position type is used when system pressure is required to be held in transit. Shock during transit is less compared to spool type “2”.
40 (Open Centre A, B&T Restricted Flow)	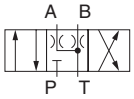	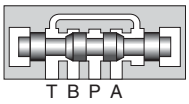	In a variation of spool type “4”, a restrictor is provided in A-T and B-T ports. Making it faster at stopping the actuator.
5 (Open Centre P, A&T)	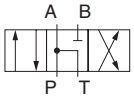	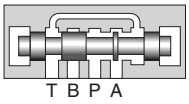	It can be used when a pump is unloading at neutral and actuator is halted at one way flow.
6 (Open Centre P&T Closed Crossover)	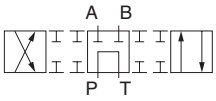	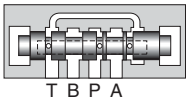	Pump is unloading and actuator position held at neutral. Suitable for series operation.
60 (Open Centre P&T Open Crossover)	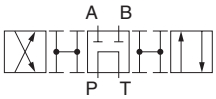	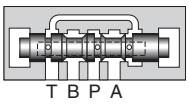	It is a variation of spool type “6”. Shock is reduced as each port is released to tank on transit.
7 (Open Centre All Ports Restricted Flow)	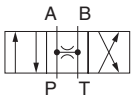	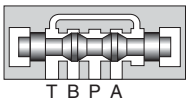	Mainly used as a 2-position type. Shock is reduced on transit.
8 (2-Way)	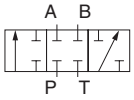	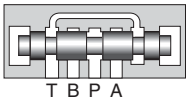	Pump pressure and cylinder position is held at neutral in the same way as spool type “2”. It is used as 2 way type.
9 (Open Centre P, A&B)	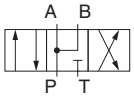	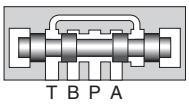	Regenerative circuit is provided at neutral.
10 (Open Centre B&T)	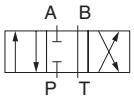	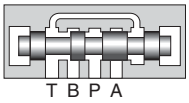	Prevent actuator from one direction drift by leakage of P port at neutral.
11 (Open Centre P&A)	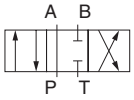	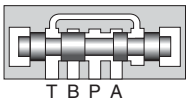	Halt actuator movement positively at B, T ports blocked P, A ports connected at neutral.
12 (Open Centre A&T)	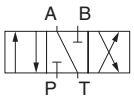	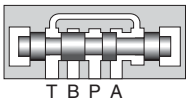	Prevent actuator from one direction drift by leakage of P port at neutral.

Mounting Surface

Mounting surface dimensions conform to ISO 4401, Hydraulic fluid power-Four-Port directional control valves-Mounting surfaces.

Model Numbers	ISO Code of Mounting Surface
(S–, L–, E–, T–, G–) DSG–01 DSHG–01 DMG–01 DCG–01	ISO 4401–AB–03–4–A
(S–, L–, E–, T–, G–) DSG–03 DMG–03 DCG–03	ISO 4401–AC–05–4–A
DSHG–03	ISO 4401–AC–05–4–A*
(S–, G–) DSHG–04 DHG–04 DMG–04	ISO 4401–AD–07–4–A
(S–, G–) DSHG–06 DHG–06 DMG–06	ISO 4401–AE–08–4–A
(S–) DSHG–10 DHG–10 DMG–10	ISO 4401–AF–10–4–A

* The main port conform to the ISO 4401–AC–05–4–A.
The pilot and drain ports is sccordance with the ISO original draft.

Interchangeability in Installation between Current and New Design

Model change has been made on the following product.
The difference between current and new design has been described on the paragraph of "Interchangeability in Installation between Current and New Design." Refer to relevant pages on each series.

Name	Model Numbers		Interchangeability in Installation	Related Page	Major Changes
	Currrent	New			
DSG–005 Series Solenoid Operated Directional Valves	DSG–005–∗∗∗–∗–30/3090	DSG–005–∗∗∗–∗–40/4090 DSG–005–∗∗∗–∗–N/N1–40/4090	Yes	—	● High Flow ● Low Pressure Drop ● Din-connector type solenoid in addition
DSG–01 Series Solenoid Operated Directional Valves	(S–, L–, T–) DSG–01–∗∗∗–∗–60/6090	(S–, L–, T–) DSG–01–∗∗∗–∗–70/7090	Yes	357	● High Pressure and High Flow ● Low Pressure Drop
1/8,3/8 Solenoid Controlled Pilot Operated Directional Valves	DSHG–01–∗∗∗–∗–13/1390 DSHG–03–∗∗∗–∗–13/1390	DSHG–01–∗∗∗–∗–14/1490 DSHG–03–∗∗∗–∗–14/1490	Yes	—	● Pilot valve has been changed from DSG-01, 60 design to 70 design.
1/2 Solenoid Controlled Pilot Operated Directional Valves	(S–) DSHG–04–∗∗∗–∗–51/5190	(S–) DSHG–04–∗∗∗–∗–52/5290	Yes	—	● Pilot valve has been changed from DSG-01, 60 design to 70 design.
3/4,1–1/4 Solenoid Controlled Pilot Operated Directional Valves	(S–) DSHG–06–∗∗∗–∗–52/5290 (S–) DSHG–10–∗∗∗–∗–42/4290	(S–) DSHG–06–∗∗∗–∗–53/5390 (S–) DSHG–10–∗∗∗–∗–43/4390	Yes	—	● Pilot valve has been changed from DSG-01, 60 design to 70 design.

Solenoid Operated / Solenoid Controlled Operated Directional Valves

WIDE RANGE OF MODELS – Choose the optimum valve to meet your needs from a largeselection available.

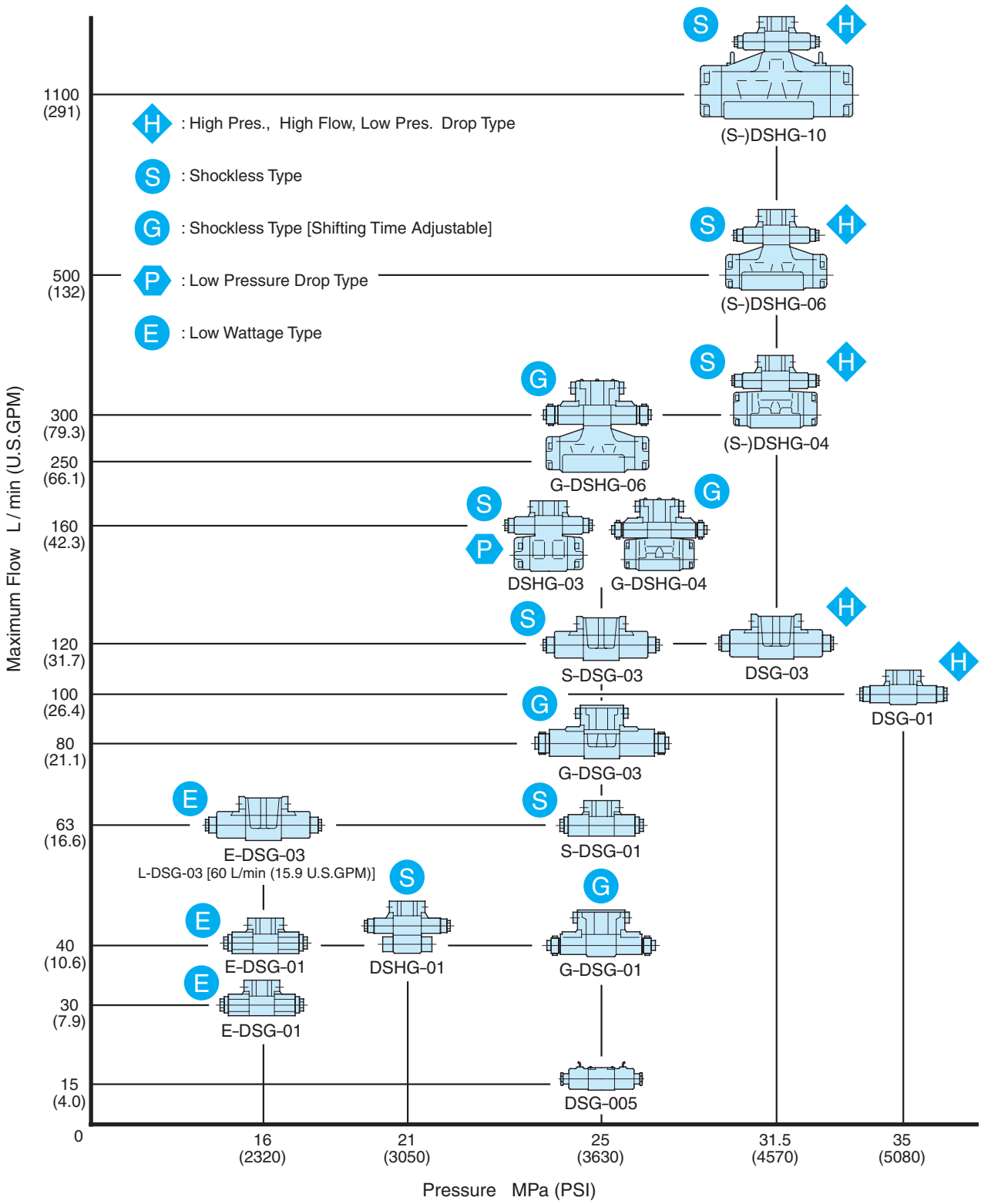

Instructions

Mounting

DSG-005	No mounting restrictions for any model.	
∗-DSG-01 ∗-DSG-03	No-spring detented models not energised continuously must be installed so that the spool axis L-L' is horizontal. Otherwise there is no mounting restrictions.	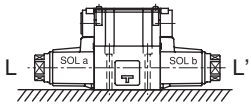 ∗-DSG-01/03
DSHG-01 DSHG-03 (S-) DSHG-04 (S-) DSHG-06 (S-) DSHG-10	No-spring models not energised continuously must be installed so that the spool axis L-L' is horizontal. Otherwise there is no mounting restrictions.	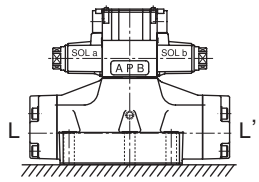 ∗-DSHG

Energisation

1. No-Spring Type
   One of two solenoids should be energised continuously to avoid malfunction.
2. On double solenoid valves do not energise both at the same time as it will result in coils burning out.

Valve Tank Port

Avoid connecting the valve tank port to a line with possible surge pressure.
Piping end of tank line should be submerged in oil.

Pilot Drain Port for Solenoid Controlled Pilot Operated Valve

Avoid connecting the valve pilot drain port to a line with possible surge pressure.
Piping end of drain should be submerged in oil.

Shockless Type

In order to benefit from a shockless operation, it is necessary to fill the tank line with operating oil.
Only after the tank line has been filled with operating oil should the valve be used on a regular basis.

Operating Force be Manual Actuator

Take care as the operating force by the manual actuator increases in proportion to the tank line back pressure. (See the graph right.)

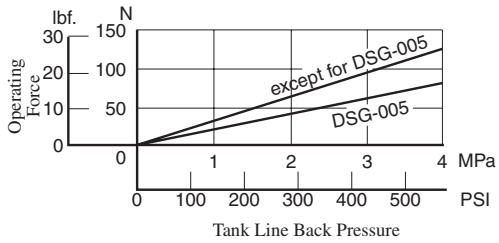

Solenoid

Solenoid connector (DIN connector)

The solenoid connector is in accordance with the international standard ISO 4400 (Fluid power systems and components-Three-pin electrical plug connectors-Characteristics and requirements).

AC Solenoid

50-60 Hz common service solenoids do not require re-wiring when the applied frequency is changed.

DC Solenoid (K-series Solenoid Operated Directional Valve)

These valves differ from conventional DC solenoid operated directional valves and have the following characteristics:

1. The spark between the relay contacts has been eliminated and therefore the valve can be operated by miniature relays.
2. The surge voltage is approximately 10 % of that normally experienced.
3. Time lag on de-energisation is reduced by approximately 50 %.

R type Models with Current Rectifier and DC Solenoid

Specially designed DC solenoid and receptacle (or connector) containing AC-DC rectifier and transient peak suppressor are provided. Connection to be made to AC power source as with conventional AC solenoid. Remarkably high reliability and long life and other advantages including quiet valve operation. No over-heating of coil due to the spool sticking and protection against transient voltage peaks are assured.

RQ type Models with Current rectifier and Quick Return Solenoid

Valve characteristics are identical to R type except for the fast return time of the spool after deenergisation.

Insulation Class of Solenoid

Model numbers	Insulation Class
DSG-005, DSG-01, S-DSG01 L-DSG-01, E-DSG-01, T-DSG-01 DSG-03, S-DSG-03, L-DSG-03 E-DSG-03, T-DSG-03 DSHG-01/03/04/06/10, S-DSHG-04/-06/10	Class H
G-DSG-01, G-DSG-03	Class F

Solenoid Operated Directional Valves, DSG-005 Series

These DSG-005 series solenoid directional valves are the pro-ducts newly developed as a "Mini-series". Compared with DSG-01 series, the valve are much more compactly manufactured but enjoy a maximum operating pressure of 25 MPa (3630 PSI) and a maximum flow rate of 15 L/min (3.96 U.S.GPM), while contributing further to a space saving requirement. Moreover, using wet armature solenoids, the valves ensure the long life.

Flying Lead Wire Type

Plug-in Connector Type

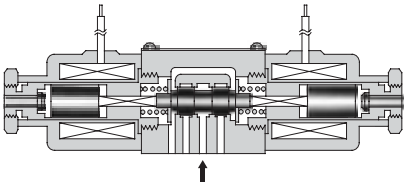

Specifications

Model Numbers	Max. Flow★ L/min (U.S.GPM)	Max. Operating Pressure MPa (PSI)	Max. Tank-Line Back Pressure MPa (PSI)	Max. Changeover Frequency min^{-1} (Cycles/min)	Approx. Mass kg (lbs.)
DSG-005-3C∗-∗-40/4090	15 (3.96)	25 (3630)	7 (1020)	120	0.5 (1.1)
DSG-005-2B∗-∗-40/4090					0.4 (.9)

★ The maximum flow means the limited flow without inducing any abnormality to the operation (changeover) of the valve.
The maximum flow differs according to the type and operating conditions. For details, please refer to the "List of Standard Models and Maximum Flow" on pages 338 to 339.

Solenoid Rating

Electric Source	Coil Type	Frequency (Hz)	Voltage (V)		Current & Power at Rated Voltage		
			Source Rating	Serviceable	Inrush★1 (A)	Holding (A)	Power (W)
AC	A100	50	100	80 – 110	0.36	0.16	—
		60		90 – 120	0.34	0.11	
	A200	50	200	160 – 220	0.18	0.08	
		60		180 – 240	0.17	0.05	
DC ★2	D12	—	12	10.8 – 13.2	—	1.2	15
	D24		24	21.6 – 26.4		0.6	

★1 Inrush current in the above table shows rms values at maximum stroke.
★2 The Plug-in Connector Type DC solenoid has a built-in surge absorber.
The Flying Lead Wire Type has no surge absorber equipped. Install a surge absorber separately.

Model Number Designation

F-	DSG	-005	-3	C	2	-D24	-N	-40	*
Special Seals	Series Number	Valve Size	Number of Valve Position	Spool-Spring Arrangement	Spool Type	Coil Type	Electrical Conduit Connection	Design Number	Design Standard
F: Special Seals for Phosphate Ester Type Fluids (Omit if not required)	**DSG**: Solenoid Operated Directional Valve	**005**	**3**	**C**: Spring Centred	**2, 3 40**	AC **A100, A200** DC **D12, D24**	**None**: Flying Lead Wire Type **N**: Plug-in Connector Type **N1**: Plug-in Connector with Indicator Light	**40**	Refer to ★
			2	**B**: Spring Offset	**2, 3**				

★ Design Standards: None ..... Japanese Standard "JIS" and European Design Standard
90 ..... N. American Design Standard

Sub-plates

Piping Size	Japanese Standard "JIS"		European Design Standard		N. American Design Standard		Approx. Mass kg (lbs.)
	Sub-plate Model Numbers	Thread Size	Sub-plate Model Numbers	Thread Size	Sub-plate Model Numbers	Thread Size	
1/8	DSGM-005X-20	Rc 1/8	DSGM-005X-2080	1/8 BSP.F	DSGM-005X-2090	1/8 NPT	0.8 (1.8)
1/4	DSGM-005Y-20	Rc 1/4	DSGM-005Y-2080	1/4 BSP.F	DSGM-005Y-2090	1/4 NPT	0.8 (1.8)

● Sub-plates are available. Specify the sub-plate model number from the table above. When sub-plates are not used, the mounting surface should have a good machined finish.

Mounting Bolts

Four socket head cap screws in the table below are included.

Descriptions	Soc. Hd. Cap Screw (4 Pcs.)	Tightening Torque
Japanese Standard "JIS" European Design Standard	M4 × 35 Lg.	2.5 - 3.5 Nm (22.1 - 31.0 in. lbs.)
N. American Design Standard	No. 8-32 UNC × 1-3/8 Lg.	

Typical Changeover Time (Example)

Changeover time varies according to oil viscosity, spool type and hydraulic circuit.

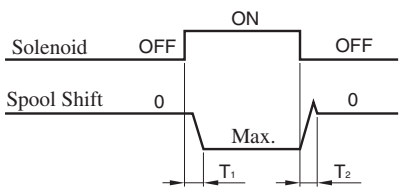

[Test Conditions]
Pressure: 16 MPa (2320 PSI)
Flow Rate: 7.5 L/min (1.98 U.S.GPM)
Viscosity: 30 mm²/s (141 SSU)
Voltage: Rated Voltage (After coil temperature rises and saturated)

Direction of Flow: P → A → B → T
P → B → A → T

[Result of Measurement]

Model Numbers	Time ms	
	T_1	T_2
DSG-005-3C2-A*	16	60
DSG-005-3C2-D*	23	40
DSG-005-2B2-A*	14	45
DSG-005-2B2-D*	15	33

List of Standard Models and The Maximum Flow

Models with AC Solenoids : DSG-005-∗∗∗-A∗-40/4090

No. of Valve Position	Spool-Spring Arrangement	Model Numbers	Graphic Symbols	Max. Flow L/min: P→A, B→T / P→B, A→T — Working Pressure MPa				P→A [Port "B" Blocked] — Working Pressure MPa				P→B [Port "A" Blocked] — Working Pressure MPa			
				5	10	16	25	5	10	16	25	5	10	16	25
Three Positions	Spring Centred	DSG-005-3C2		15	15	15	15	15(14) 15(12)	15(7) 12(3)	12(3) 5(1)	4(0.5) 1(0.5)	15(14) 15(12)	15(7) 12(3)	12(3) 5(1)	4(0.5) 1(0.5)
		DSG-005-3C3	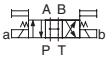	12	12	12	12	15	15	15	15	15	15	15	15
		DSG-005-3C40		15	15	15	15	15(14) 15(10)	15(6) 12(5)	12(2) 5(2)	4(0.5) 1(0.5)	15(14) 15(10)	15(6) 12(5)	12(2) 5(2)	4(0.5) 1(0.5)
Two Positions	Spring Offset	DSG-005-2B2		14	14	14	14	2	1	1	1	15(14) 15(14)	15(10) 14(9)	13(5) 8(4)	6(0.5) 4(0.5)
		DSG-005-2B3		13.5	13.5	13.5	13.5	3	3	3	3	15	15(14) 15(14)	15(11) 15(11)	15(9) 15(9)

Notes: 1. The relation between the maximum flow in the table above and the frequency/voltage (within the serviceable voltage) is as shown below.

(Example)

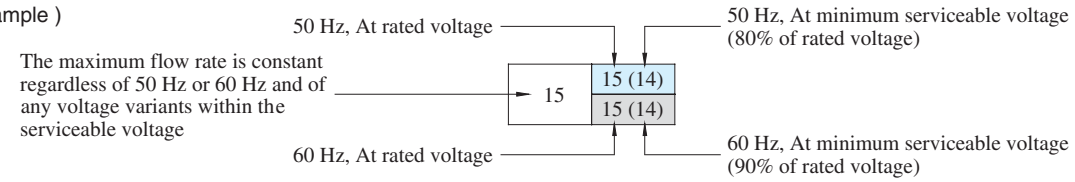

Models with DC Solenoids : DSG-005-∗∗∗-D∗-40/4090

No. of Valve Position	Spool-Spring Arrangement	Model Numbers	Graphic Symbols	Max. Flow L/min: P→A, B→T / P→B, A→T — Working Pressure MPa				P→A [Port "B" Blocked] — Working Pressure MPa				P→B [Port "A" Blocked] — Working Pressure MPa			
				5	10	16	25	5	10	16	25	5	10	16	25
Three Positions	Spring Centred	DSG-005-3C2		15	15	15	15	15 12	8 5	5 3	3 2	15 12	8 5	5 3	3 2
		DSG-005-3C3		15	15	15	15	15	15	15	15	15	15	15	15
		DSG-005-3C40	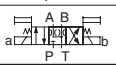	15	15	15	15	15	13 9	8 5.5	5 3.5	15	13 9	8 5.5	5 3.5
Two Positions	Spring Offset	DSG-005-2B2		14	14	14	14	8.5	4.5	6.5	6.5	15	15 11	11 7.5	9 5.5
		DSG-005-2B3		13.5	13.5	13.5	13.5	8	7	8	9	15	15	15	13.5 10.5

Notes: 1. The relation between the maximum flow in the table above and the voltage (within the serviceable voltage) is as shown below.

(Example)

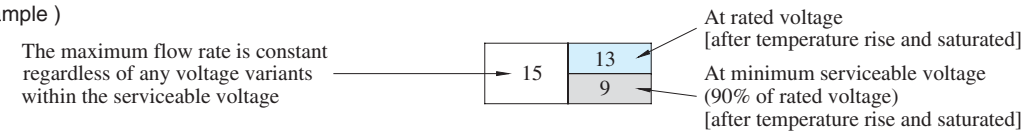

List of Standard Models and The Maximum Flow

Models with AC Solenoids : DSG-005-∗∗∗-A∗-40/4090

No. of Valve Position	Spool-Spring Arrangement	Model Numbers	Graphic Symbols	Max. Flow U.S.GPM: P→A→B→T, P→B→A→T				P→A [Port "B" Blocked]				P→B [Port "A" Blocked]			
				Working Pressure PSI				Working Pressure PSI				Working Pressure PSI			
				730	1450	2320	3630	730	1450	2320	3630	730	1450	2320	3630
Three Positions	Spring Centred	DSG-005-3C2	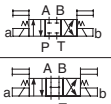	4.0	4.0	4.0	4.0	4.0(3.7) 4.0(3.2)	4.0(1.9) 4.0(.8)	3.2(.8) 1.3(.3)	1.1(.1) .3(.1)	4.0(3.7) 4.0(3.2)	4.0(1.9) 3.2(.8)	3.2(.8) 1.3(.3)	1.1(.1) .3(.1)
		DSG-005-3C3	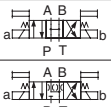	3.2	3.2	3.2	3.2	4.0	4.0	4.0	4.0	4.0	4.0	4.0	4.0
		DSG-005-3C40	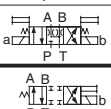	4.0	4.0	4.0	4.0	4.0(3.7) 4.0(2.6)	4.0(1.6) 3.2(1.3)	3.2(.5) 1.3(.5)	1.1(.1) .3(.1)	4.0(3.7) 4.0(2.6)	4.0(1.6) 3.2(1.3)	3.2(.5) 1.3(.5)	1.1(.1) .3(.1)
Two Positions	Spring Offset	DSG-005-2B2	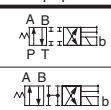	3.7	3.7	3.7	3.7	.5	.3	.3	.3	4.0(3.7) 4.0(3.7)	4.0(2.6) 3.7(2.4)	3.4(1.3) 2.1(1.1)	1.6(.1) 1.1(.1)
		DSG-005-2B3	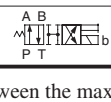	3.6	3.6	3.6	3.6	.8	.8	.8	.8	4.0	4.0(3.7) 4.0(3.7)	4.0(2.9) 4.0(2.9)	4.0(2.4) 4.0(2.4)

Notes: 1. The relation between the maximum flow in the table above and the frequency/voltage (within the serviceable voltage) is as shown below.

(Example)

The maximum flow rate is constant regardless of 50 Hz or 60 Hz and of any voltage variants within the serviceable voltage

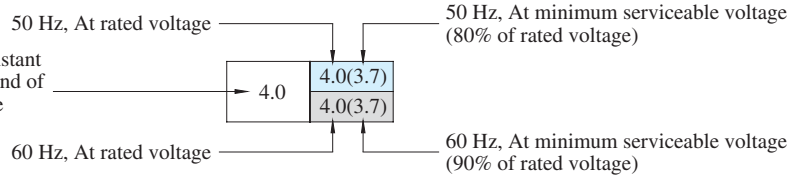

Models with DC Solenoids : DSG-005-∗∗∗-D∗-40/4090

No. of Valve Position	Spool-Spring Arrangement	Model Numbers	Graphic Symbols	Max. Flow U.S.GPM: P→A→B→T, P→B→A→T				P→A [Port "B" Blocked]				P→B [Port "A" Blocked]			
				Working Pressure PSI				Working Pressure PSI				Working Pressure PSI			
				730	1450	2320	3630	730	1450	2320	3630	730	1450	2320	3630
Three Positions	Spring Centred	DSG-005-3C2	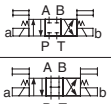	4.0	4.0	4.0	4.0	4.0 3.2	2.1 1.3	1.3 .8	.8 .5	4.0 3.2	2.1 1.3	1.3 .8	.8 .5
		DSG-005-3C3	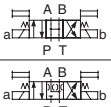	4.0	4.0	4.0	4.0	4.0	4.0	4.0	4.0	4.0	4.0	4.0	4.0
		DSG-005-3C40	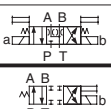	4.0	4.0	4.0	4.0	4.0	3.4 2.4	2.1 1.5	1.3 .9	4.0	3.4 2.4	2.1 1.5	1.3 .9
Two Positions	Spring Offset	DSG-005-2B2	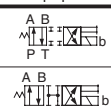	3.7	3.7	3.7	3.7	2.3	1.2	1.7	1.7	4.0	4.0 2.9	2.9 2.0	2.4 1.5
		DSG-005-2B3	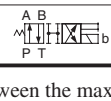	3.6	3.6	3.6	3.6	2.1	1.9	2.1	2.4	4.0	4.0	4.0	3.6 2.8

Notes: 1. The relation between the maximum flow in the table above and the voltage (within the serviceable voltage) is as shown below.

(Example)

The maximum flow rate is constant regardless of any voltage variants within the serviceable voltage

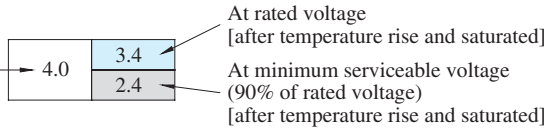

Pressure Drop

Pressure drop curves based on viscosity of 30 mm²/s (141 SSU) and specific gravity of 0.850.

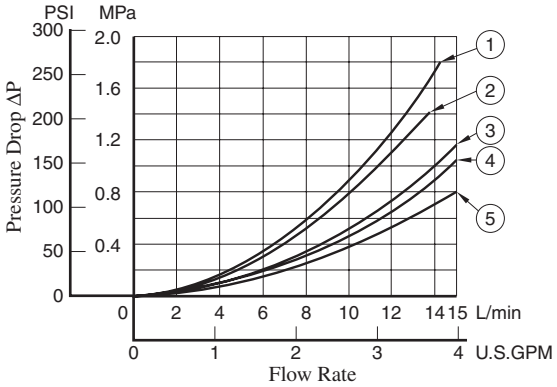

Model Numbers	Pressure Drop Curve Numbers				
	P → A	B → T	P → B	A → T	P → T
DSG-005-3C2	④	④	④	④	—
DSG-005-3C3	⑤	⑤	⑤	⑤	③
DSG-005-3C40	④	④	④	④	—
DSG-005-2B2	①	①	④	④	—
DSG-005-2B3	②	②	④	④	—

● For any other viscosity, multiply the factors in the tabele below.

Viscosity	mm²/s	15	20	30	40	50	60	70	80	90	100
	SSU	77	98	141	186	232	278	324	371	417	464
Factor		0.84	0.91	1.00	1.07	1.14	1.19	1.24	1.28	1.32	1.35

● For any other specific gravity (G'), the pressure drop (ΔP) may be obtained from the formula below.

$$\Delta P' = \Delta P\ (G'/0.850)$$

Flying Lead Wire Type

● Spring Centred: DSG-005-3C∗-A∗/D∗-40/4090

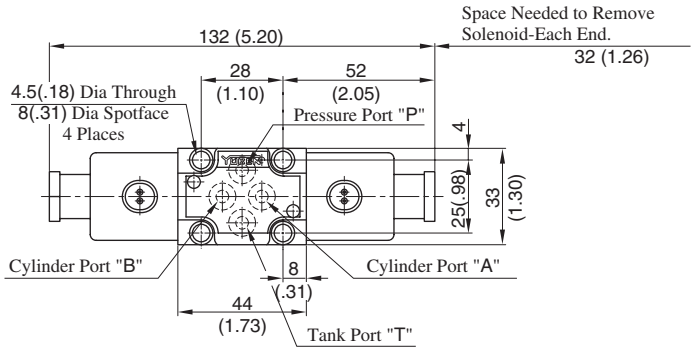

● Spring Offset:
DSG-005-2B∗-A∗/D∗-40/4090

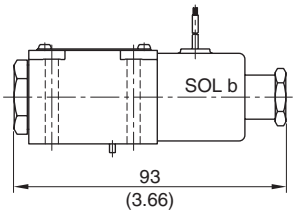

● For other dimensions, refer to "Spring Centred" type.

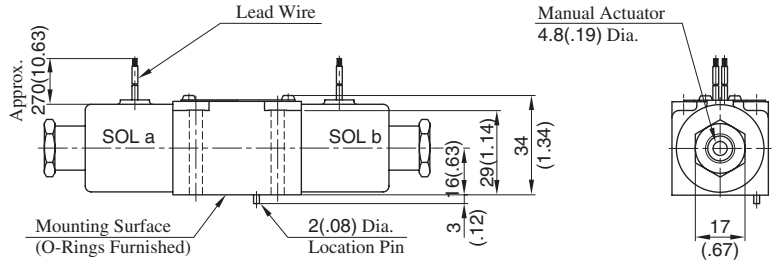

DIMENSIONS IN MILLIMETRES (INCHES)

DIN Connector Type / DIN Connector with Indicator Light

● Spring Centred: DSG-005-3C∗-A∗/D∗-N/N1-40/4090

● Spring Offset: DSG-005-2B∗-A∗/D∗-N/N1-40/4090

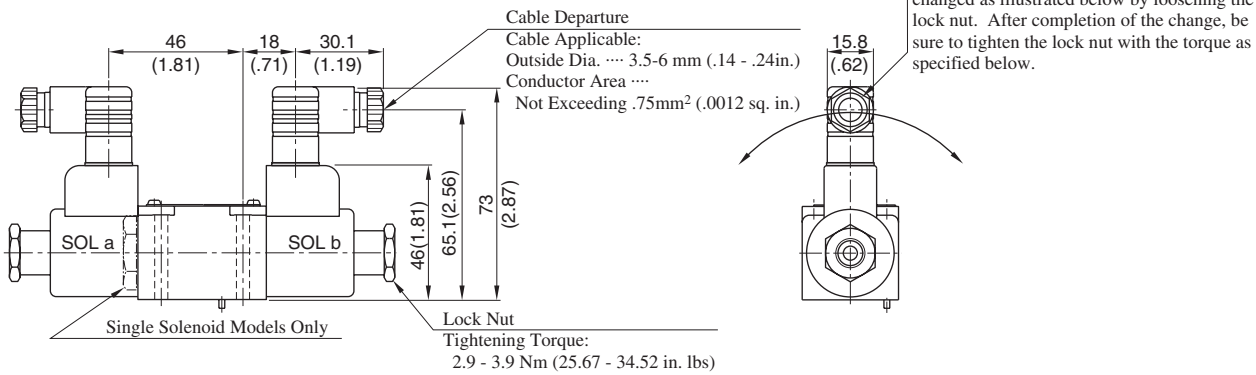

● For other dimensions, refer to "Flying Lead Wire Type".

DIMENSIONS IN MILLIMETRES (INCHES)

■Sub-plates: DSGM-005∗-20/2080/2090

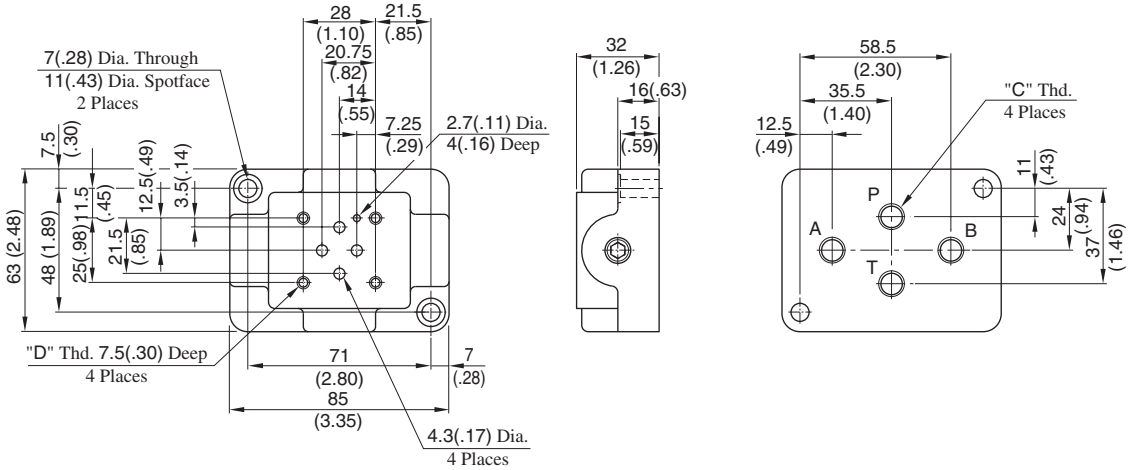

Sub-plate Model Numbers	Piping Size "**C**" Thd.	"**D**" Thd.
DSGM-005X-20	Rc 1/8	M4
DSGM-005X-2080	1/8 BSP. F	
DSGM-005X-2090	1/8 NPT	No. 8-32 UNC
DSGM-005Y-20	Rc 1/4	M4
DSGM-005Y-2080	1/4 BSP. F	
DSGM-005Y-2090	1/4 NPT	No. 8-32 UNC

List of Seals, Solenoid Ass'y, Coil and Connector Ass'y

DSG-005-∗∗∗-∗-40/4090

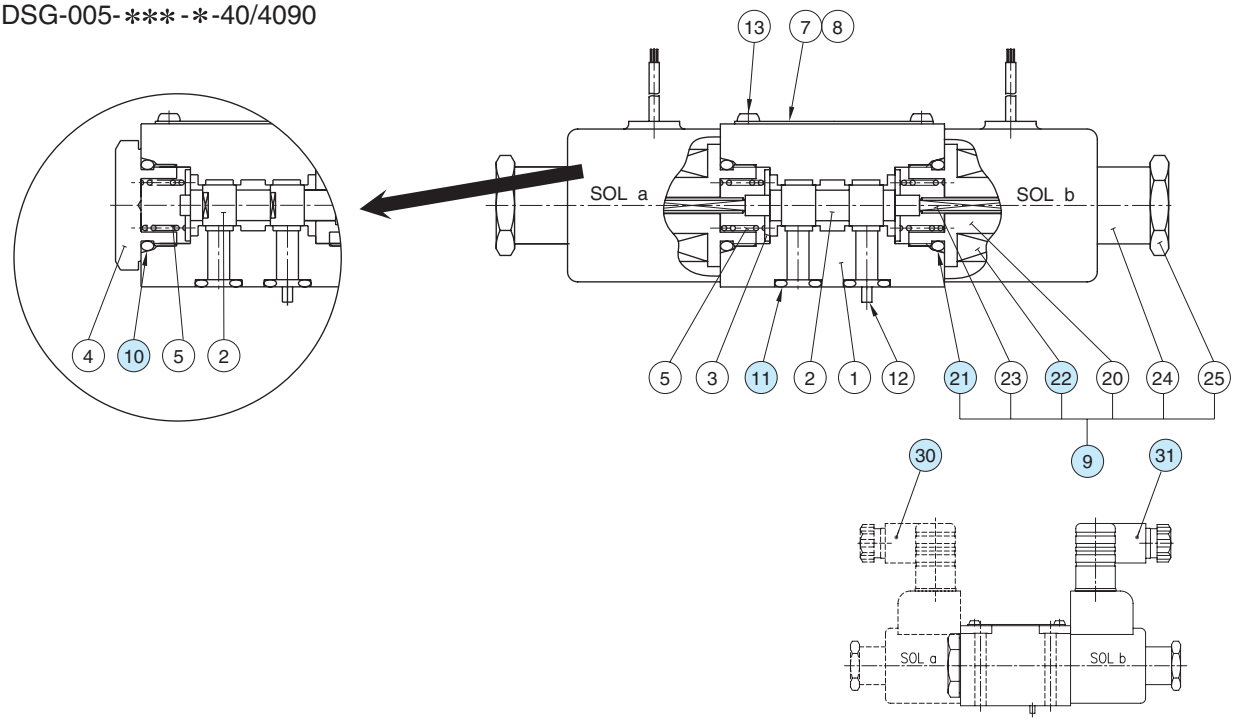

List of Seals

Item	Name of Parts	Part Numbers	Qty.		Remarks
			3C∗	2B∗	
10	O-Ring	SO-NB-P14	—	1	
11	O-Ring	SO-NB-P6	4	4	
21	O-Ring	SO-NB-P14	2	1	Included in Solenoid Ass'y

Note: When ordering seals, please specify the seal kit number "KS-DSG-005-40".

Solenoid Ass'y, Coil and Connector Ass'y No.

Valve Model Number	⑨ Solenoid Ass'y No.	㉒ Coil No.	㉚ Connector Ass'y Part No.	㉛ Connector Ass'y Part No.	Remarks
DSG-005-∗∗∗-A100	SA05-100-40	C-SA05-100-40	——	——	Flying Lead Wire Type
DSG-005-∗∗∗-A200	SA05-200-40	C-SA05-200-40			
DSG-005-∗∗∗-D12	SD05-12-40	C-SD05-12-40			
DSG-005-∗∗∗-D24	SD-05-24-40	C-SD-05-24-40			
DSG-005-∗∗∗-A100-N	SA05-100-N-40	C-SA05-100-N-40	TK290058-7	TK290058-7	Plug-in Connector Type
DSG-005-∗∗∗-A200-N	SA05-200-N-40	C-SA05-200-N-40			
DSG-005-∗∗∗-D12-N	SD05-12-N-40	C-SD05-12-N-40			
DSG-005-∗∗∗-D24-N	SD-05-24-N-40	C-SD-05-24-N-40			
DSG-005-∗∗∗-A100-N1	SA05-100-N-40	C-SA05-100-N-40	TK290378-9	TK290378-9	Plug-in Connector with Indicator Light
DSG-005-∗∗∗-A200-N1	SA05-200-N-40	C-SA05-200-N-40	TK290379-7	TK290379-7	
DSG-005-∗∗∗-D12-N1	SD05-12-N-40	C-SD05-12-N-40	TK290089-2	TK290089-2	
DSG-005-∗∗∗-D24-N1	SD-05-24-N-40	C-SD-05-24-N-40	TK290090-0	TK290090-0	

1/8 Solenoid Operated Directional Valves, DSG-01 Series

These are Solenoid Operated Directional Valves of high pressure, high flow and low pressure drop, the features of which can be materialized by employing a powerful wet type solenoid and the rational flow channel design.

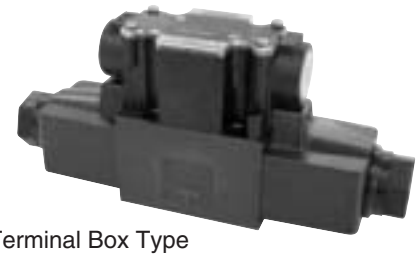

Terminal Box Type

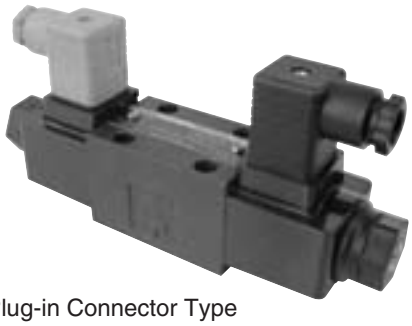

Plug-in Connector Type

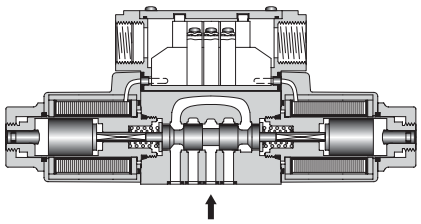

- **High Pressure & High Flow Rate**
  In comparison to our existing lines, both the pressure and flow of these valves are much increased.
  - Max. Operating Pressure: approx. 10 % increased [31.5→35 MPa (4570 →5080 PSI)]
  - Max. T-Line Back Pressure: approx. 30 % increased [16→21 MPa (2320 →3050 PSI)]
  - Max. Flow Rate: approx. 60 % increased [63→100 L/min (16.64 →26.42 U.S.GPM)]
- **Low Pressure Drop**
  The pressure drop of these valves is reduced by 10 % from 1.0 to 0.9 MPa (145 to 131 PSI), in comparison to our existing lines*; the valves effectively reduce the energy consumption of the unit.
  {* At Flow Rate: 60 L/min (15.9 U.S.GPM), Spool Type: 3C2 (P→A)}
- **Compact & Small Mass**
  Despite of high pressure, high flow and low pressure drop, these valve bodies are compact and lightweight with DC double solenoids; the overall length and mass are reduced from 210 to 205 mm (8.26 to 8.07 inch) and from 2.2 to 1.85 kg (4.85 to 4.08 lbs), respectively.
- **Shockless type available**
  In addition to the standard valves for high pressure and high flow, a shockless type capable of minimizing noise and vibration in piping during spool changeover is also available.
- **Stable Operation**
  Due to the powerful magnetic and spring force of the solenoids, these valves exhibit a high tolerance to contaminants and especially stable operation.
- **IP65-equivalent high dust- and water-proof**
  These valves demonstrate excellent dust- and water-proof characteristics, in compliance with I. E. C. Pub. 529. IP65 and JIS C 0920 IP65 (dust- and jet-proof type).
- **Usable in products of various standards**
  These standard valves are CE certified for installation in equipment overseas.
  UL/CSA certified products are also available.

Specifications

Valve Type	Model Numbers	Max. Flow★2 L/min (U.S.GPM)	Max. Operating Pressure MPa (PSI)	Max. T-Line Back Pressure MPa (PSI)	Max. Changeover Frequency Cycle/min {min⁻¹}	Mass kg (lbs.)
Standard Type	DSG-01-3C∗-∗-70/7090	100 (26.4)	35 (5080)	21 (3050)	300 (R Type Sol. Only 120)	1.85 (4.08)
	DSG-01-2D2-∗-70/7090					
	DSG-01-2B∗-∗-70/7090					1.4(3.09)
Shockless Type	S-DSG-01-3C∗-∗-70/7090	63 (16.6)	25 (3630)	21 (3050)	120	1.85(4.08)
	S-DSG-01-2B2-∗-70/7090					1.4(3.09)
Low Wattage(14W) Type ★1	L-DSG-01-3C∗-∗-70/7090	40 (10.6)	16 (2320)	16 (2320)	300 (R Type Sol. Only 120)	1.85 (4.08)
	L-DSG-01-2D2-∗-70/7090					
	L-DSG-01-2N∗-∗-70/7090					
	L-DSG-01-2B∗∗-∗-70/7090					1.4(3.09)

★ 1. For details of L-DSG-01, please contact us.
★ 2. Maximum flow indicates a ceiling flow depends on the type of spool and operating condition, refer to the List of Spool Functions on pages 347 to 351 for details.

Sub-plate

Piping Size	Japanese Standard "JIS "		European Design Standard		N.American Design Standard		Approx. Mass kg (lbs.)
	Sub-plate Model Numbers	Thread Size	Sub-plate Model Numbers	Thread Size	Sub-plate Model Numbers	Thread Size	
1/8	DSGM-01-31	Rc 1/8	DSGM-01-3180	1/8 BSP.F	DSGM-01-3190	1/8 NPT	0.8 (1.8)
1/4	DSGM-01X-31	Rc 1/4	DSGM-01X-3180	1/4 BSP.F	DSGM-01X-3190	1/4 NPT	0.8 (1.8)
3/8	DSGM-01Y-31	Rc 3/8	—	—	DSGM-01Y-3190	3/8 NPT	0.8 (1.8)

● Sub-plates are available. Specify the sub-plate model number from the table above.
When sub-plates are not used, the mounting surface should have a good machined finish.

Mounting Bolt

For socket head cap screws in the table below are included.

Descriptions	Soc. Hd. Cap Screw (4 pcs.)	Tightening Torque
Japanese Standard "JIS" European Design Standard	M5 × 45 Lg.	5 - 7 Nm (43 - 60 in. 1bs.) [Applicable to working pressure more than 25 MPa (3630 PSI): 6 - 7 Nm (52 - 60 in. 1bs.)]
N. American Design Standard	No. 10-24 UNC × 1-3/4 Lg.	

Solenoid Ratings

Valve Type	Electric source	Coil Type	Frequency (Hz)	Voltage (V)		Current & Power at Rated Voltage		
				Source Rating	Serviceable Range	Inrush (A)★2	Holding (A)	Power (W)
Standard Type Shockless Type	AC★1	A100	50	100	80 - 110	2.42	0.51	—
			60	100	90 - 120	2.14	0.37	
				110		2.35	0.44	
		A120	50	120	96 - 132	2.02	0.42	
			60		108 - 144	1.78	0.31	
		A200	50	200	160 - 220	1.21	0.25	
			60	200	180 - 240	1.07	0.19	
				220		1.18	0.22	
		A240	50	240	192 - 264	1.01	0.21	
			60		216 - 288	0.89	0.15	
	DC (K Series)	D12	—	12	10.8 - 13.2	—	2.45	29
		D24		24	21.6 - 26.4		1.23	
		D48		48	43.2 - 52.8		0.61	
	AC → DC Rectified (R)	R100	50/60	100	90 - 110	—	0.33	29
		R200		200	180 - 220		0.16	

★1. AC solenoid is not available in shockless type.
R type models with built-in current rectifier is recommended for shockless operation with AC power.
★2. Inrush current in the above table show rms values at maximum stroke.
★3. There are more coil types other than the above. For details, please make inquiries.

The coil type numbers in the shaded column are handled as opotinal extras. In case these coils are required to be chosen, please confirm the time of delivery with us before ordering.

Options

● Push Button with Lock Nut

Can be used for manual changeover of spool. The push button can be locked in the pressed condition.

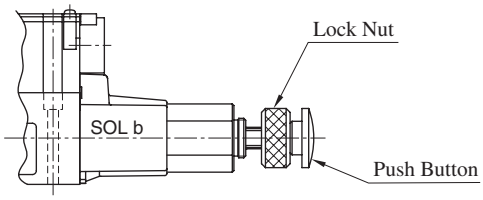

● Plug-in Connector with Solenoid Indicator Light

These are the indicator light incorporated plug-in connector type solenoids. Energisation or de-energisation of the solenoid can be easily identified with the incorporated indicator light.

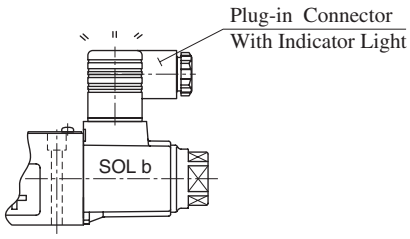

Model Number Designation

F-	S-	DSG	- 01	-2	B	2	A	-D24	-C	-N	-70	*	-L
Special Seals	Shockless Type	Series Number	Valve Size	Number of Valve Positions	Spool-Spring Arrangement	Spool Type	Special Two Position Valve (Omit if not required)	Coil Type	Manual Override	Electrical Conduit Connection	Design Number	Design Standard	Models with Reverse Mtg. of Solenoid (Omit if not required)
F: For Phosphate Ester Type Fluids (Omit if not required	**None**: Standard Type	**DSG**: Solenoid Operated Directional Valve	**01**	**3**: Three Positions	**C**: Spring Centred	**2, 3 4, 40 60, 9 10, 11 12**	—	AC: **A100** **A120** **A200** **A240** DC: **D12** **D24** **D48** R: (AC→DC) **R100** **R200**	**None**: Manual Override Pin	**None**: Terminal Box Type	**70**	**None**: Japanese Std. "JIS" **90**: N.American Design Std.	—
				2: Two Positions	**D**: No-Spring Detented	**2**	—						
					B: Spring Offset	**2 3 8**	**A**★1 **B**★1		**C**: Push Button and Lock Nut (Option)	**N**: Plug-in Connector Type **N1**★2: Plug-in Connector Type with Indicator Light (Option)		**None**: Japanese Std. "JIS" and European Design Std. **90**: N. American Design Std.	**L**
	S: Shockless Type			**3**: Three Positions	**C**: Spring Centred	**2 4**	—	DC: **D12** **D24** **D48** R: (AC→DC) **R100** **R200**					—
				2: Two Positions	**B**: Spring Offset	**2**							**L**

★1. In case of the special two position valve, please refer to page 352 for details.
★2. N1 is not available for R type solenoids.

In the table above, the symbols or numbers highlighted with shade represent the optional extras. The valves with model number having such optional extras are handles as options, therefore, please confirm the time of delivery with us before ordering.

■ List of Standard Models and The Maximum Flow

● Models with AC Solenoids: DSG-01-∗∗∗-A∗

No. of Valve Positions	Spool-Spring Arrangement	Model Numbers	Graphic Symbols	Max. Flow L/min: P → A → B → T, P → B → A (Working Pressure MPa)					P → A [Port "B" Blocked] (Working Pressure MPa)					P → B [Port "A" Blocked] (Working Pressure MPa)				
				10	16	25	31.5	35	10	16	25	31.5	35	10	16	25	31.5	35
Three Positions	Spring Centred	DSG-01-3C2		100	100	100	100	100	100(43) 57(38)	100(41) 53(31)	80(21) 29(17)	60(17) 19(10)	38(15) 13(9)	100(43) 57(38)	100(41) 53(31)	80(21) 29(17)	60(17) 19(10)	38(15) 13(9)
		DSG-01-3C3		100(80) 90(63)	100(80) 90(63)	100(80) 90(63)	100(77) 90(63)	100(77) 90(63)	70(46) 45(30)	70(46) 45(30)	70(46) 45(30)	70(46) 45(30)	70(46) 45(30)	70(46) 45(30)	70(46) 45(30)	70(46) 45(30)	70(46) 45(30)	70(46) 45(30)
		DSG-01-3C4		90	90	90 90(26)	90(22) 43(14)	35(18) 30(11)	100(38) 50(31)	76(28) 38(20)	67(15) 20(10)	57(10) 16(7)	35(7) 12(5)	100(38) 50(31)	76(28) 38(20)	67(15) 20(10)	57(10) 16(7)	35(7) 12(5)
		DSG-01-3C40		85 80	85 80	85 80(30)	80(40) 63(15)	80(22) 25(10)	85(40) 70(26)	85(35) 50(24)	85(24) 32(16)	60(16) 22(13)	55(12) 18(10)	85(40) 70(26)	85(35) 50(24)	85(24) 32(16)	60(16) 22(13)	55(12) 18(10)
		DSG-01-3C60★		43(23) 40(23)	43(23) 40(23)	42(23) 38(23)	42(23) 36(23)	42(23) 35(23)	54(32) 48(30)	54(32) 47(30)	52(32) 47(30)	52(32) 47(30)	52(32) 47(30)	54(32) 48(30)	54(32) 47(30)	52(32) 47(30)	52(32) 47(30)	52(32) 47(30)
		DSG-01-3C9		100	100	100	100	100	20	15	10	10	8	20	15	10	10	8
		DSG-01-3C10◆		100	100 100(70)	100(63) 80(20)	100(33) 70(20)	100(27) 40(19)	100(50) 100(37)	100(37) 55(25)	100(20) 29(14)	78(16) 20(11)	62(13) 15(10)	100(50) 100(37)	100(37) 55(25)	100(20) 29(14)	78(16) 20(11)	62(13) 15(10)
		DSG-01-3C11◆		100	100	100	100	100	23	20	13	10	5	100(65) 70(50)	85(52) 57(40)	72(45) 50(25)	65(34) 43(19)	60(27) 35(18)
		DSG-01-3C12◆		100	100 100(70)	100(63) 80(20)	100(33) 70(20)	100(27) 40(19)	100(50) 100(37)	100(37) 55(25)	100(20) 29(14)	78(16) 20(11)	62(13) 15(10)	100(50) 100(37)	100(37) 55(25)	100(20) 29(14)	78(16) 20(11)	62(13) 15(10)
Two Positions	No-Spring Detented	DSG-01-2D2		80	80	80	80	80	45	45	45(21) 36(18)	45(16) 28(13)	38(13) 22(12)	50	50(45) 50(45)	50(42) 50(42)	45(40) 45(40)	45(40) 45(40)
	Spring Offset	DSG-01-2B2		85	85	85	85	85	20	16	16	15	13	85(63) 85(30)	80(50) 60(33)	63(40) 50(28)	44(32) 40(28)	44(32) 40(28)
		DSG-01-2B3		70	70	70	70	70	50	50	50	50	50	80(70) 70(48)	80(70) 70(48)	80(70) 70(48)	80(70) 70(48)	80(70) 70(48)
		DSG-01-2B8		—	—	—	—	—	26	17	13	11	10	80(50) 35(20)	70(40) 23(15)	60(20) 15(8)	45(10) 10(5)	30(10) 7(5)

Notes: 1. The relation between the maximum flow in the table above and the frequency/voltage (within the serviceable voltage) is as shown below.

(Example)

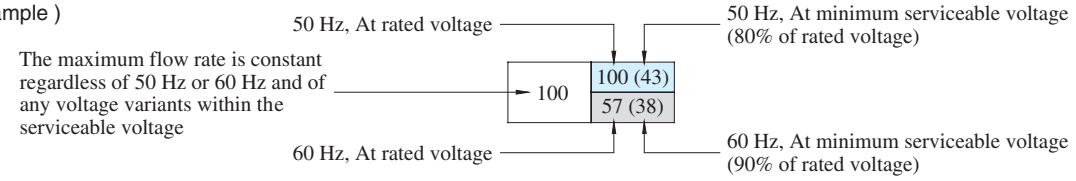

2. For the maximum flow rate in P → T of the valves with a ★ mark, please see page 351.

The valve models with a ◆ mark are handled as Options. If you choose such valves, check the time of delivery beforehand.

■ List of Standard Models and The Maximum Flow

● Models with DC or R Type Solenoids: DSG-01-∗∗∗-D∗/R∗

No. of Valve Positions	Spool-Spring Arrangement	Model Numbers	Graphic Symbols	Max. Flow L/mi														
				P → A → B → T; P → B → A					P → A [Port "B" Blocked]					P → B [Port "A" Blocked]				
				Working Pressure MPa					Working Pressure MPa					Working Pressure MPa				
				10	16	25	31.5	35	10	16	25	31.5	35	10	16	25	31.5	35
Three Positions	Spring Centred	DSG-01-3C2		100	100	100	100	100	100	45	28	25	22	100	45	28	25	22
									55	35	23	19	17	55	35	23	19	17
		DSG-01-3C3		100	100	100	100	100	78	78	78	78	75	78	78	78	78	75
				80	80	80	80	80	70	70	70	70	70	70	70	70	70	70
		DSG-01-3C4		90	90	90	50	38	100	58	38	31	29	100	58	38	31	29
						42	26	20	62	48	30	25	23	62	48	30	25	23
		DSG-01-3C40		85	85	65	40	33	85	52	30	26	24	85	52	30	26	24
						45	30	26	65	36	25	21	19	65	36	25	21	19
		DSG-01-3C60 ★		50	50	50	50	50	66	66	66	66	66	66	66	66	66	66
				41	41	41	41	41	58	58	58	58	58	58	58	58	58	58
		DSG-01-3C9		100	100	100	100	100	20	15	10	10	8	20	15	10	10	8
		DSG-01-3C10 ◆		85	85	85	80	40	100	56	36	28	24	100	56	36	28	24
						35	23	20	74	43	28	20	19	74	43	28	20	19
		DSG-01-3C11 ◆		100	100	100	100	100	23	20	13	10	5	100	60	40	36	32
														85	46	32	28	24
		DSG-01-3C12 ◆		85	85	85	80	40	100	56	36	28	24	100	56	36	28	24
						35	23	20	74	43	28	20	19	74	43	28	20	19
Two Positions	No-Spring Detented	DSG-01-2D2		75	75	75	75	75	45	45	40	30	27	50	50	50	45	45
				70	70	70	70	70			30	25	22		45	42	40	40
	Spring Offset	DSG-01-2B2		80	80	80	80	80	20	16	16	15	13	46	31	24	22	22
														32	23	19	18	18
		DSG-01-2B3		70	70	70	70	70	50	50	50	50	50	75	75	75	75	75
														65	65	65	65	65
		DSG-01-2B8		—	—	—	—	—	26	17	13	11	10	53	35	23	19	17
														35	30	17	13	12

Notes: 1. The relation between the maximum flow in the table above and the voltage (within the serviceable voltage) is as shown below.

(Example)

The maximum flow rate is constant regardless of any voltage variants within the serviceable voltage → 100

100	At rated voltage [after temperature rise and saturated]
55	At minimum serviceable voltage (90% of rated voltage) [after temperature rise and saturated]

2. For the maximum flow rate in P → T of the valves with a ★ mark, please see page 351.

The valve models with a ◆ mark are handled as Options. If you choose suce valves, check the time of delivery beforehand.

List of Standard Models and The Maximum Flow

Models with AC Solenoids: DSG-01-∗∗∗-A∗

No. of Valve Positions	Spool-Spring Arrangement	Model Numbers	Graphic Symbols	Max. Flow U.S.GPM: P → A, P → B, A → B, B → A, A → T, B → T					P → A [Port "B" Blocked]					P → B [Port "A" Blocked]				
				Working Pressure PSI					Working Pressure PSI					Working Pressure PSI				
				1450	2320	3630	4570	5080	1450	2320	3630	4570	5080	1450	2320	3630	4570	5080
Three Positions	Spring Centred	DSG-01-3C2		26.4	26.4	26.4	26.4	26.4	26.4(11.4) 15.1(10.0)	26.4(10.8) 14.0(8.2)	21.1(5.6) 7.7(4.5)	15.9(4.5) 5.0(2.6)	10.0(4.0) 3.4(2.4)	26.4(11.4) 15.1(10.0)	26.4(10.8) 14.0(8.2)	21.1(5.6) 7.7(4.5)	15.9(4.5) 5.0(2.6)	10.0(4.0) 3.4(2.4)
		DSG-01-3C3		26.4(21.1) 23.8(16.6)	26.4(21.1) 23.8(16.6)	26.4(21.1) 23.8(16.6)	26.4(21.1) 23.8(16.6)	26.4(21.1) 23.8(16.6)	18.5(12.2) 11.9(7.9)	18.5(12.2) 11.9(7.9)	18.5(12.2) 11.9(7.9)	18.5(12.2) 11.9(7.9)	18.5(12.2) 11.9(7.9)	18.5(12.2) 11.9(7.9)	18.5(12.2) 11.9(7.9)	18.5(12.2) 11.9(7.9)	18.5(12.2) 11.9(7.9)	18.5(12.2) 11.9(7.9)
		DSG-01-3C4		23.8	23.8	23.8 23.8(6.9)	23.8(5.8) 11.4(3.7)	9.2(4.8) 7.9(2.9)	26.4(10.0) 13.2(8.2)	20.1(17.4) 10.0(5.3)	17.7(4.0) 5.3(2.6)	15.1(2.6) 4.2(1.9)	9.2(1.8) 3.2(1.3)	26.4(10.0) 13.2(8.2)	20.1(7.4) 10.0(5.3)	17.7(4.0) 5.3(2.6)	15.1(2.6) 4.2(1.9)	9.2(1.8) 3.2(1.3)
		DSG-01-3C40		22.5 21.1	22.5 21.1	22.5 21.1(7.9)	21.1(10.6) 16.6(4.0)	21.1(5.8) 6.6(2.4)	22.5(10.6) 18.5(6.9)	22.5(9.3) 13.2(6.3)	22.5(6.3) 8.5(4.2)	15.9(4.2) 5.8(3.4)	14.5(3.2) 4.8(2.6)	22.5(10.6) 18.5(6.9)	22.5(9.3) 13.2(6.3)	22.5(6.3) 8.5(4.2)	15.9(4.2) 5.8(3.4)	14.5(3.2) 4.8(2.6)
		DSG-01-3C60★		11.4(6.1) 10.6(6.1)	11.4(6.1) 10.6(6.1)	11.1(6.1) 10.0(6.1)	11.1(6.1) 9.5(6.1)	11.1(6.1) 9.2(6.1)	14.2(8.4) 12.7(7.9)	14.2(8.4) 12.4(7.9)	13.7(8.4) 12.4(7.9)	13.7(8.4) 12.4(7.9)	13.7(8.4) 12.4(7.9)	14.2(8.4) 12.7(7.9)	14.2(8.4) 12.4(7.9)	13.7(8.4) 12.4(7.9)	13.7(8.4) 12.4(7.9)	13.7(8.4) 12.4(7.9)
		DSG-01-3C9		26.4	26.4	26.4	26.4	26.4	5.3	4.0	2.6	2.6	2.1	5.3	4.0	2.6	2.6	2.1
		DSG-01-3C10◆		26.4	26.4 26.4(18.5)	26.4(16.6) 21.1(5.3)	26.4(8.7) 18.5(5.3)	26.4(7.1) 10.6(5.0)	26.4(13.2) 26.4(9.8)	26.4(9.8) 14.5(6.6)	26.4(5.3) 7.7(3.7)	20.6(4.2) 5.3(2.9)	16.4(3.4) 4.0(2.6)	26.4(13.2) 26.4(9.8)	26.4(9.8) 14.5(6.6)	26.4(5.3) 7.7(3.7)	20.6(4.2) 5.3(2.9)	16.4(3.4) 4.0(2.6)
		DSG-01-3C11◆		26.4	26.4	26.4	26.4	26.4	6.1	5.3	3.4	2.6	1.3	26.4(17.2) 18.5(13.2)	22.5(13.7) 15.1(10.6)	19.0(13.7) 13.2(6.6)	17.2(9.0) 11.4(5.0)	15.9(7.1) 9.2(4.8)
		DSG-01-3C12◆		26.4	26.4 26.4(18.5)	26.4(16.6) 21.1(5.3)	26.4(8.7) 18.5(5.3)	26.4(7.1) 10.6(5.0)	26.4(13.2) 26.4(9.8)	26.4(9.8) 14.5(6.6)	26.4(5.3) 7.7(3.7)	20.6(4.2) 5.3(2.9)	16.4(3.4) 4.0(2.6)	26.4(13.2) 26.4(9.8)	26.4(9.8) 14.5(6.6)	26.4(5.3) 7.7(3.7)	20.6(4.2) 5.3(2.9)	16.4(3.4) 4.0(2.6)
Two Positions	No-Spring Detented	DSG-01-2D2		21.1	21.1	21.1	21.1	21.1	11.9	11.9	11.9(5.6) 9.5(4.8)	11.9(4.2) 7.4(3.4)	10.0(3.4) 5.8(3.2)	13.2	13.2(11.9) 13.2(11.9)	13.2(11.1) 13.2(11.1)	11.9(10.6) 11.9(10.6)	11.9(10.6) 11.9(10.6)
	Spring Offset	DSG-01-2B2		22.5	22.5	22.5	22.5	22.5	5.3	4.2	4.2	4.0	3.4	22.5(16.6) 22.5(7.9)	21.1(13.2) 15.9(8.7)	16.6(10.6) 13.2(7.4)	11.6(8.5) 10.6(7.4)	11.6(8.5) 10.6(7.4)
		DSG-01-2B3		18.5	18.5	18.5	18.5	18.5	13.2	13.2	13.2	13.2	13.2	21.1(18.5) 18.5(12.7)	21.1(18.5) 18.5(12.7)	21.1(18.5) 18.5(12.7)	21.1(18.5) 18.5(12.7)	21.1(18.5) 18.5(12.7)
		DSG-01-2B8		—	—	—	—	—	6.9	4.5	3.4	2.9	2.6	21.1(13.2) 9.2(5.3)	18.5(10.6) 6.1(4.0)	15.9(5.3) 4.0(2.1)	11.9(2.6) 2.6(1.3)	7.9(2.6) 1.9(1.3)

Notes: 1. The relation between the maximum flow in the table above and the frequency/voltage (within the serviceable voltage) is as shown below.

(Example)

The maximum flow rate is constant regardless of 50 Hz or 60 Hz and of any voltage variants within the serviceable voltage

50 Hz, At rated voltage

50 Hz, At minimum serviceable voltage (80% of rated voltage)

26.4 | 26.4(11.4) / 15.1(10.0)

60 Hz, At rated voltage

60 Hz, At minimum serviceable voltage (90% of rated voltage)

2. For the maximum flow rate in P → T of the valves with a ★ mark, please see page 351.

The valve models with a ◆ mark are handled as Options. If you choose such valves, check the time of delivery beforehand.

List of Standard Models and The Maximum Flow

Models with DC or R Type Solenoids: DSG-01-∗∗∗-D∗/R∗

No. of Valve Positions	Spool-Spring Arrangement	Model Numbers	Graphic Symbols	Max. Flow U.S.GPM														
				P → A → B → T; P → B → A					P → A [Port "B" Blocked]					P → B [Port "A" Blocked]				
				Working Pressure PSI					Working Pressure PSI					Working Pressure PSI				
				1450	2320	3630	4570	5080	1450	2320	3630	4570	5080	1450	2320	3630	4570	5080
Three Positions	Spring Centred	DSG-01-3C2		26.4	26.4	26.4	26.4	26.4	26.4	11.9	7.4	6.6	5.8	26.4	11.9	7.4	6.6	5.8
									14.5	9.3	6.1	5.0	4.5	14.5	9.3	6.1	5.0	4.5
		DSG-01-3C3		26.4	26.4	26.4	26.4	26.4	20.6	20.6	20.6	20.6	19.8	20.6	20.6	20.6	20.6	19.8
				21.1	21.1	21.1	21.1	21.1	18.5	18.5	18.5	18.5	18.5	18.5	18.5	18.5	18.5	18.5
		DSG-01-3C4		23.8	23.8	23.8	13.2	10.0	26.4	15.3	10.0	8.2	7.7	26.4	15.3	10.0	8.2	7.7
						11.1	6.9	5.3	16.4	12.7	7.9	6.6	6.1	16.4	12.7	7.9	6.6	6.1
		DSG-01-3C40		22.5	22.5	17.2	10.6	8.7	22.5	13.7	7.9	6.9	6.3	22.5	13.7	7.9	6.9	6.3
						11.9	7.9	6.9	17.2	9.5	6.6	5.6	5.0	17.2	9.5	6.6	5.6	5.0
		DSG-01-3C60 ★		13.3	13.3	13.3	13.3	13.3	17.4	17.4	17.4	17.4	17.4	17.4	17.4	17.4	17.4	17.4
				10.8	10.8	10.8	10.8	10.8	15.3	15.3	15.3	15.3	15.3	15.3	15.3	15.3	15.3	15.3
		DSG-01-3C9		26.4	26.4	26.4	26.4	26.4	5.3	4.0	2.6	2.6	2.1	5.3	4.0	2.6	2.6	2.1
		DSG-01-3C10 ◆		22.5	22.5	22.5	21.1	10.6	26.4	14.8	9.5	7.4	6.3	26.4	14.8	9.5	7.4	6.3
						9.2	6.1	5.3	19.6	11.4	7.4	5.3	5.0	19.6	11.4	7.4	5.3	5.0
		DSG-01-3C11 ◆		26.4	26.4	26.4	26.4	26.4	6.1	5.3	3.4	2.6	1.3	26.4	15.9	10.6	9.5	8.5
														22.5	12.2	8.5	7.4	6.3
		DSG-01-3C12 ◆		22.5	22.5	22.5	21.1	10.6	26.4	14.8	9.5	7.4	6.3	26.4	14.8	9.5	7.4	6.3
						9.2	6.1	5.3	19.6	11.4	7.4	5.3	5.0	19.6	11.4	7.4	5.3	5.0
Two Positions	No-Spring Detented	DSG-01-2D2		19.8	19.8	19.8	19.8	19.8	11.9	11.9	10.6	7.9	7.1	13.2	13.2	13.2	11.9	11.9
				18.5	18.5	18.5	18.5	18.5			7.9	6.6	5.8		13.2	11.1	10.6	10.6
	Spring Offset	DSG-01-2B2		21.1	21.1	21.1	21.1	21.1	5.3	4.2	4.2	4.0	3.4	12.2	8.2	6.3	5.8	5.8
														8.5	6.1	5.0	4.8	4.8
		DSG-01-2B3		18.5	18.5	18.5	18.5	18.5	13.2	13.2	13.2	13.2	13.2	19.8	19.8	19.8	19.8	19.8
														17.2	17.2	17.2	17.2	17.2
		DSG-01-2B8		—	—	—	—	—	6.9	4.5	3.4	2.9	2.6	14.0	9.2	6.1	5.0	4.5
														9.3	7.9	4.5	3.4	3.2

Notes: 1. The relation between the maximum flow in the table above and the voltage (within the serviceable voltage) is as shown be low.

(Example)

The maximum flow rate is constant regardless of any voltage variants within the serviceable voltage → 26.4

26.4
14.5

At rated voltage [after temperature rise and saturated]

At minimum serviceable voltage (90% of rated voltage) [after temperature rise and saturated]

2. For the maximum flow rate in P → T of the valves with a ★ mark, please see page 351.

The valve models with a ◆ mark are handled as Options. If you choose suce valves, check the time of delivery beforehand.

Maximum Flow of Centre By-Pass

In valve type 3C60, in case where the actuator is put on in between the cylinder ports A and B as illustrated below and where the actuator moves and suspended at its stroke end and where the valve is then shifted to the neutral position in the suspended state of the actuator, the maximum flow rates available are those as shown as the table below regardless of any voltage in the range of serviceable valtage.

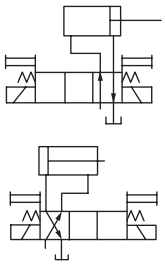

Mode Numbers	Graphic Symbol	Max. Flow L/min (U.S.GPM)				
		10 MPa (1450 PSI)	16 MPa (2320 PSI)	25 MPa (3630 PSI)	31.5 MPa (4570 PSI)	35 MPa (5080 PSI)
DSG-01-3C60-A∗/D∗/R∗	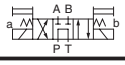	55 (14.5)	44 (11.6)	30 (7.9)	26 (6.9)	22 (5.8)

List of Shockless Models and The Maximum Flow

● Models with DC or R Type Solenoids: S-DSG-01-∗∗∗-D∗/R∗

No. of Valve Positions	Spool-Spring Arrangement	Model Numbers	Graphic Symbol	Max. Flow L/min (U.S.GPM)								
				P → A → B → T; P → B → A → T			P → A [Port "B" Blocked]			P → B [Port "A" Blocked]		
				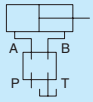								
				Working Pressure MPa (PSI)			Working Pressure MPa (PSI)			Working Pressure MPa (PSI)		
				10 (1450)	16 (2320)	25 (3630)	10 (1450)	16 (2320)	25 (3630)	10 (1450)	16 (2320)	25 (3630)
Three Positions	Spring Centred	S-DSG-01-3C2	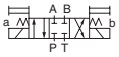	63 (16.6)	63 (16.6)	40 (10.6)	40 (10.6)	32 (8.5)	25 (6.6)	40 (10.6)	32 (8.5)	25 (6.6)
							32 (8.5)	20 (5.3)	16 (4.23)	32 (8.5)	20 (5.3)	16 (4.23)
		S-DSG-01-3C4		60 (15.9)	50 (13.2)	40 (10.6)	40 (10.6)	32 (8.5)	16 (4.2)	40 (10.6)	32 (8.5)	16 (4.2)
					40 (10.6)	20 (5.3)	32 (8.45)	16 (4.23)	12 (3.17)	32 (8.45)	16 (4.23)	12 (3.17)
Two Positions	Spring Offset	S-DSG-01-3B2		50 (13.2)	45 (11.9)	45 (11.9)	30 (7.9)	30 (7.9)	30 (7.9)	60 (15.9)	40 (10.6)	40 (10.6)
				45 (11.9)	40 (10.6)	40 (10.6)						

Notes: 1. The relation between the maximum flow in the table above and the voltage (within the serviceable voltage) is as shown be low.

(Example)

The maximum flow rate is constant regardless of any voltage variants within the serviceable voltage

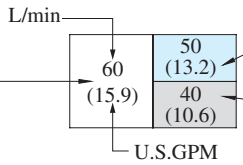

At rated voltage [after temperature rise and saturated]

At minimum serviceable voltage (90% of rated voltage) [after temperature rise and saturated]

Reverse Mounting of Solenoid.

In spring offset type, it is a standard configuration that the solenoid is mounted onto the valve in the SOL b position (side). However, in this particular spool-spring arrangement, the mounting of the solenoid onto the valve in the reverse position -SOL a side- is also available. The graphic symbol for this reverse mounting is as shown below.
As for the valve type 2B∗A and 2B∗B, please refer to the explanation under the heading of "Valves Using Neutral Position and Side Position" given below.

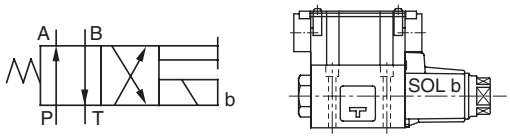

Standard Mtg. of Solenoid

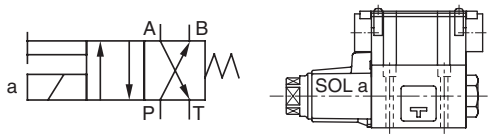

Reverse Mtg. of Solenoid

Valves Using Neutral Position and Side Position. (Special Two position Valve)

Besides the use of the standard 2-position valves aforementioned in the "List of Standard Models and Maximum Flow", the 3-position valves also can be used as the 2-position valves using the two of their three positions. In this case, there are two kinds of the valve available. One is the valve using the neutral position and SOL a position (2B∗A) and another is the valve using the neutral position and SOL b position (2B∗B).

(Example) In case of Spool Type "2"

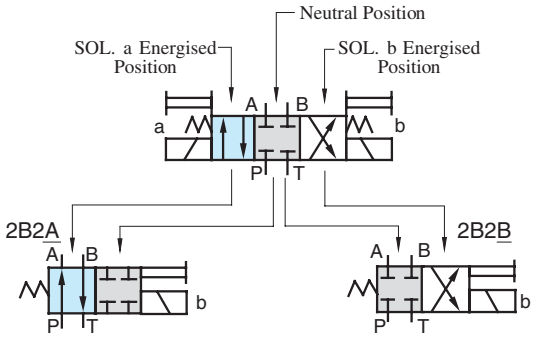

"A": Use of Neutral and SOL. a Energised Position (2B2A)

"B": Use of Neutral and SOL. b Energised Position (2B2B)

Model Numbers	Graphic SymbolsG	
	Standard Mtg. Type	Reverse Mtg. Type
DSG-01-2B∗A	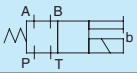	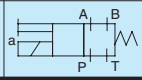
DSG-01-2B2A		——

Model Numbers	raphic Symbols	
	Standard Mtg. Type	Reverse Mtg. Type
DSG-01-2B∗B	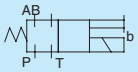	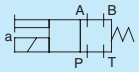
DSG-01-2B2B		——
DSG-01-2B3B		——
DSG-01-2B4B		
DSG-01-2B60B		——
DSG-01-2B10B		——

In the above table, the graphic symbols in mounting type highlighted with shade are optional extra, therefore, please confirm the time of delivery with us before ordering.

Typical Changeover Time

Changeover time varies according to oil viscosity, spool type and hydraulic circuit.

Standard Type (Without Shockless Function)

[Test Conditions]
Pressure: 16 MPa (2320 PSI)
Flow Rate: 31.5 L/min (8.3 U.S.GPM)
Viscosity: 35 mm^2/s (164 SSU)
Voltage: 100 %V
(After coil temprature rises and saturated)

[Result of Measurement]

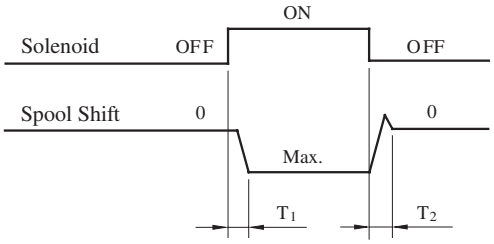

Type	Model Numbers	Time ms	
		T_1	T_2
Standard Type	DSG-01-3C2-A∗	15	23
	DSG-01-3C2-D∗	48	19
	DSG-01-3C2-R∗	50	100

Shockless Type

[Test Circuit and Conditions]

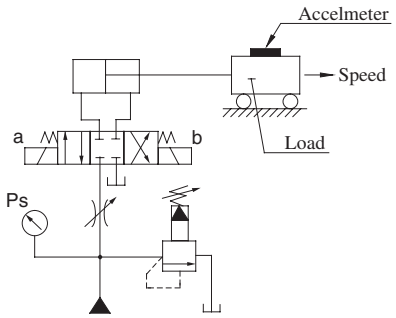

Setting Pressure (Ps): 7 MPa (1020 PSI)
Load (W): 1000 kg (2205 1bs.)
Speed: 8 m/min (26.2 ft./min)
Viscosity: 35 mm^2/s (164 SSU)

[Reaults of Measurement]

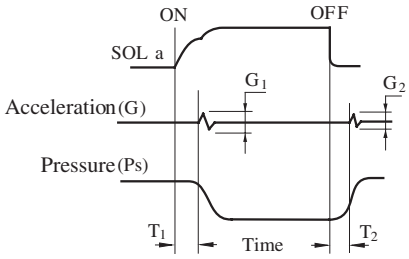

Type	Model Nmbers	Time ms		Acceleration m/s^2 (G)	
		T_1	T_2	G_1	G_2
Shockless Type	S-DSG-01-3C2-D∗	70	30	12 (1.2)	7 (0.7)
Standard Type	DSG-01-3C2-D∗	35	25	18 (1.8)	15 (1.5)

Pressure Drop

Pressure drop curves based on viscosity of 35 mm^2/s (164 SSU) and specific gravity of 0.850.

Standard Type: DSG-01

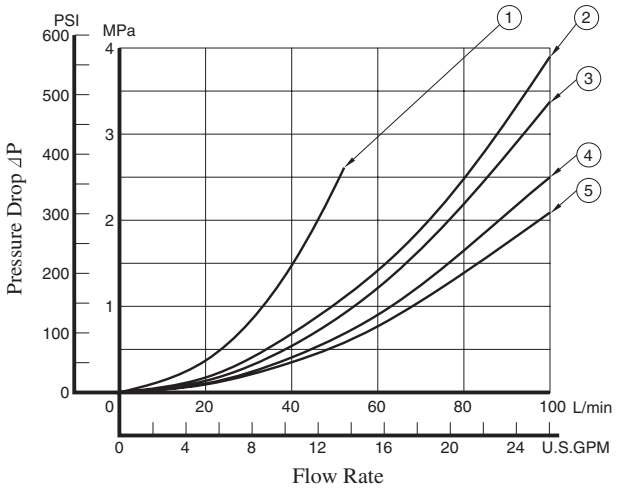

Model Numbers	Pressure Drop Curve Number				
	P→A	B→T	P→B	A→T	P→T
DSG-01-3C2	④	④	④	④	—
DSG-01-3C3	⑤	⑤	⑤	⑤	②
DSG-01-3C4	④	④	④	④	—
DSG-01-3C40	④	④	④	④	—
DSG-01-3C60	①	①	①	①	②
DSG-01-3C9	⑤	③	⑤	③	—
DSG-01-3C10	④	⑤	④	④	—
DSG-01-3C11	④	④	④	④	—
DSG-01-3C12	④	④	④	⑤	—
DSG-01-2D2	⑤	④	⑤	④	—
DSG-01-2B2	⑤	④	⑤	④	—
DSG-01-2B3	⑤	⑤	⑤	⑤	—
DSG-01-2B8	⑤	—	④	—	—

Shockless Type: S-DSG-01

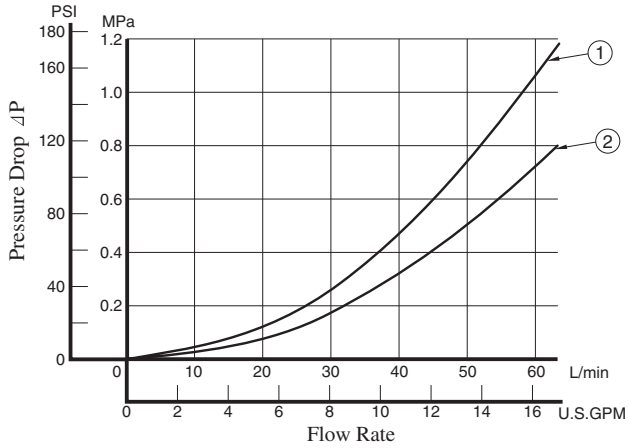

Model Numbers	Pressure Drop Curve Number			
	P→A	B→T	P→B	A→T
S-DSG-01-3C2	①	①	①	①
S-DSG-01-3C4	①	②	①	②
S-DSG-01-2B2	①	①	①	①

- For any other viscosity, multiply the factors in the table below.

Viscosity	mm^2/s	15	20	30	40	50	60	70	80	90	100
	SSU	77	98	141	186	232	278	324	371	417	464
Factor		0.81	0.87	0.96	1.03	1.09	1.14	1.19	1.23	1.27	1.30

- For any other specific gravity (G'), the pressure drop (⊿P') may be obtained from the formula below.

$$\Delta P' = \Delta P\ (G'/0.850)$$

Mounting surface: ISO 4401-AB-03-4-A

TERMINAL BOX TYPE

Models with AC Solenoids

- Double Solenoid: Spring Centred & No-Spring Detented

DSG-01- 3C∗ / 2D2 -A∗-70/7090

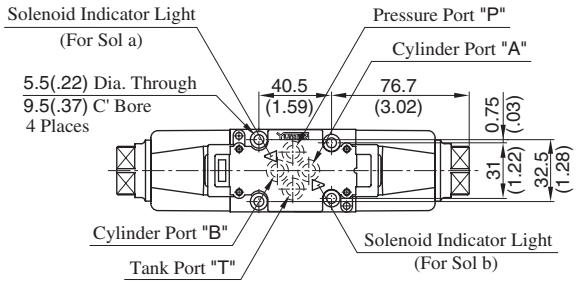

- Single Solenoid: Spring Offset

DSG-01-2B∗-A∗-70/7090

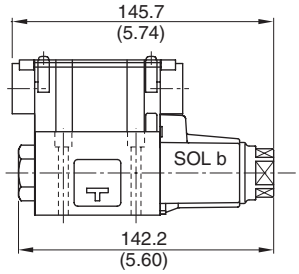

- For other dimensions, refer to "spring Centred and No-Spring Detented" models.
- Solenoid being mounted in the reverse position SOL a side is also available.

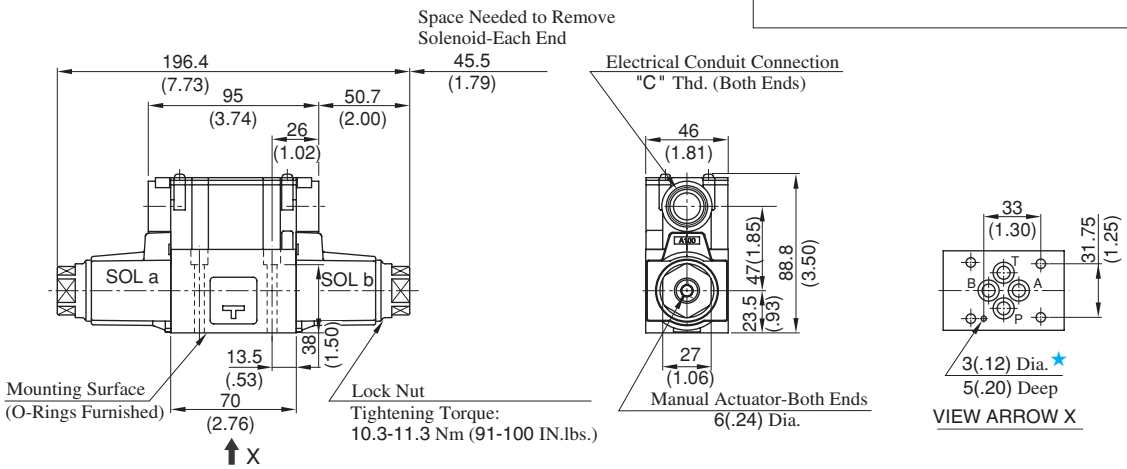

Model Numbers	"C" Thd.
DSG-01-∗∗∗-A∗-70	G 1/2
DSG-01-∗∗∗-A∗-7090	1/2 NPT

★ Locating pin can be fitted to this hole to conform with ISO4401-03-02-94. However, locating pin is not provided to standard design valve. When ordering valve with a locating pin, please consult Yuken.

DIMENSIONS IN MILLIMETRES (INCHES)

Models with DC Solenoids: (S-)DSG-01- ∗∗∗-D∗-70/7090

Models with R Type Solenoids: (S-)DSG-01- ∗∗∗ -R∗ -70/7090

- Spring Centred
- No-Spring Detented
- Spring Offset

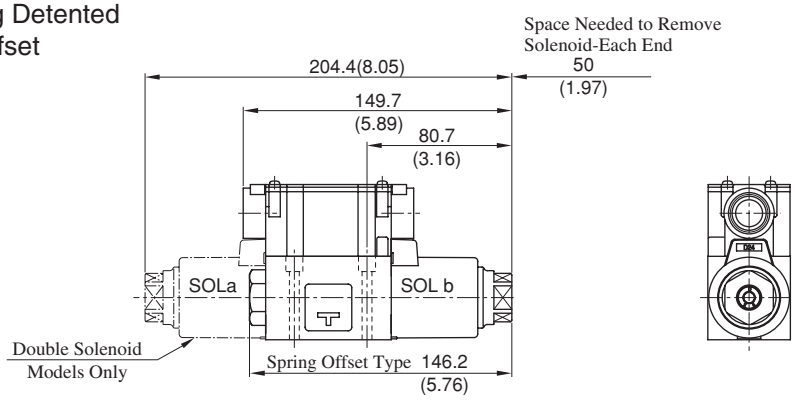

- For other dimensions, refer to models with AC solenoids.

Sub-plate : DSGM-01/01X/01Y-31/3180/3190

DIMENSIONS IN MILLIMETRES (INCHES)

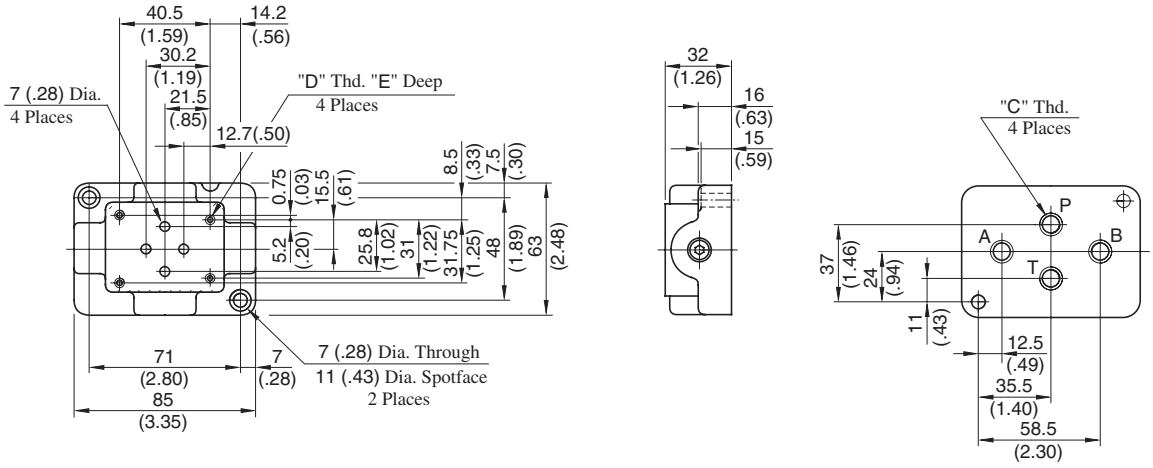

Sub-plate Model Numbers	Piping Size "C" Thd.	"D" Thd.	"E" mm(IN.)
DSGM-01-31	Rc 1/8	M5	10 (.39)
DSGM-01-3180	1/8 BSP.F		
DSGM-01-3190	1/8 NPT	No.10-24 UNC	12 (.47)
DSGM-01X-31	Rc 1/4	M5	10 (.39)
DSGM-01X-3180	1/4 BSP.F		
DSGM-01X-3190	1/4 NPT	No.10-24 UNC	12 (.47)
DSGM-01Y-31	Rc 3/8	M5	10 (.39)
DSGM-01Y-3190	3/8 NPT	No. 10-24 UNC	12 (.47)

PLUG-IN CONNECTOR TYPE (N)
PLUG-IN CONNECTOR WITH INDICATOR LIGHT (N1)

DIMENSIONS IN MILLIMETRES (INCHES)

- Models with AC Solenoids: DSG-01-∗∗∗-A∗-N/N1-70/7090
- Models with DC Solenoids: (S-)DSG-01-∗∗∗-D∗-N/N1-70/7090
- Models with R Solenoids: (S-)DSG-01-∗∗∗-R∗-N-70/7090

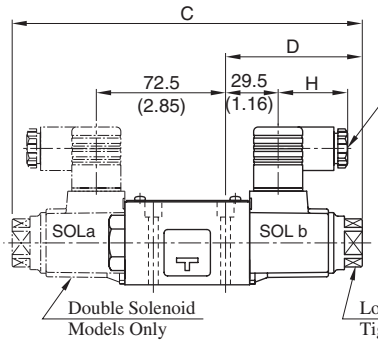

Cable Departure
Cable Applicable:
Outside Dia. ···· 8 - 10 mm (.31 - .39 in.)
Conductor Area ····
Not Exceeding 1.5 mm² (.0023 Sq. in.)

The position of the Plug-in connector can be changed as illustrated below by loosening the lock nut. After completion of the change, be sure to tighten the lock nut with the torque as specified below.

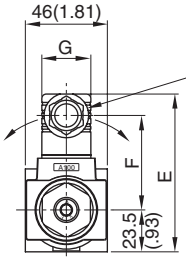

Model Numbers	C	D	E	F	G	H
DSG-01-∗∗∗-A∗-N∗	196.4 (7.73)	76.7 (3.02)	88.5 (3.48)	53 (2.09)	27.5 (1.08)	39 (1.54)
(S-)DSG-01-∗∗∗-D∗-N∗	204.4 (8.05)	80.7 (3.18)	99.5 (3.92)	64 (2.52)	27.5 (1.08)	39 (1.54)
(S-)DSG-01-∗∗∗-R∗-N	204.4 (8.05)	80.7 (3.18)	102.5 (4.04)	57.2 (2.25)	34 (1.34)	53 (2.09)

● For other dimensions, refer to "Terminal Box type" (Page 356).

Models with Push Button & Lock Nut
(S-)DSG-01-∗∗∗-∗-C

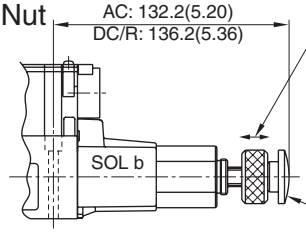

Lock Nut
Press the "Push Button" then turn "Lock Nut" clockwise. The position of the "Push Button" is held. Be sure to loosen "Lock Nut" fully before solenoid is energised.

Push Button

Interchangeability in Installation Current and New Design

In ouder to achieve higher pressure, higher flow, lower pressure drop DSG-01 valves has been upgraded from the 60 design series to the 70 design series.
The figures in the table below are the comparison between the current and the new design valves.

Specifications

Design Number	Max. Flow L/min (U.S.GPM)	Max. Operating Pressure MPa (PSI)	Max. T-Line Back Pres. MPa (PSI)	Max. Changeover Frequency Cycle/min (min⁻¹)	Pressure Drop★ MPa (PSI) {P→A}	Mass kg (lbs.)	
						3C∗/2D∗	2B∗
New Design: 70	100(26.4)	35(5080)	21(3050)	300 (R Type sol. Only 120)	0.9(130)	1.85(4.08)	1.4(3.09)
Current Design: 60	63(16.6)	31.5(4570)	16(2320)		1.0(145)	2.2(4.85)	1.6(3.53)

★ Flow Rate: 60 L/min (15.9 U.S.GPM), Viscosity: 30 mm²/s (141 SSU), Spool type "2" (Closed centre)

Interchangeability in Installation

Interchangeability in installation in maintained though there are minor differences in demension as in the following table.

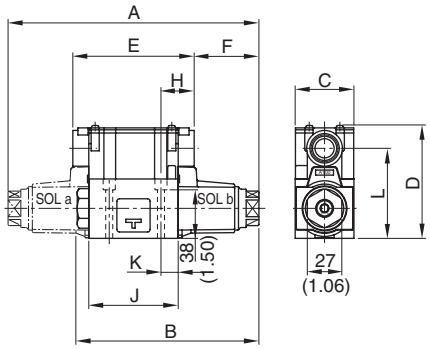

Coil Type	Design Number	A	B	C	D	E	F	H	J	K	L
AC	New Design : 70	196.4 (7.73)	142.2 (5.60)	46 (1.81)	88.8 (3.50)	95 (3.74)	50.7 (2.00)	26 (1.02)	70 (2.76)	13.5 (.53)	70.5 (2.78)
	Current Design : 60	191.4 (7.54)	142.7 (5.62)	48 (1.89)	90.3 (3.56)	90 (3.54)	50.7 (2.00)	23.5 (.93)	65 (2.56)	11 (.43)	72 (2.83)
DC R	New Design : 70	204.4 (8.05)	146.2 (5.76)	46 (1.81)	88.8 (3.50)	95 (3.74)	54.7 (2.15)	26 (1.02)	70 (2.76)	13.5 (.53)	70.5 (2.78)
	Current Design : 60	210 (8.27)	152 (5.98)	48 (1.89)	90.3 (3.56)	90 (3.54)	60 (2.36)	23.5 (.93)	65 (2.56)	11 (.43)	72 (2.83)

Details of Receptacle

Type of Electrical Conduit Connection	Double Solenoid Type	Single Solenoid Type
Terminal Box Type	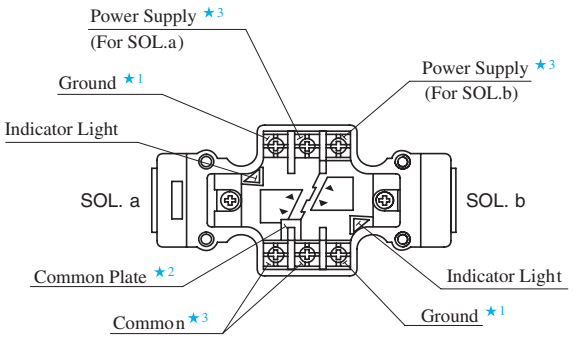	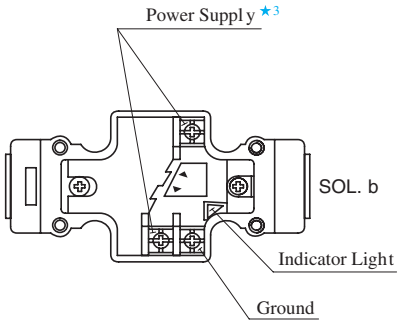
Plug-in Connector Type	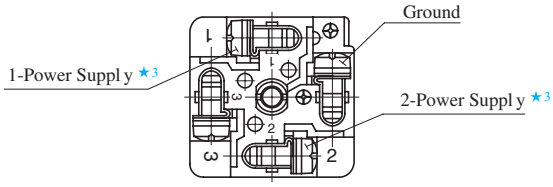	

★1. There are two grounding terminals. You can use either one.
★2. If you do not need the common plate, remove it.
★3. With DC solenoids, polarity is no question.

⚠ DANGER

- Do not perform wiring while the power is on.
  Doing so may result in electric shock, burns or death.
- Make the wiring properly. Improper wiring will cause an irregular movement of the machine, resulting in a grave accident.

Electrical Circuit

Type of Electrical Conduit Connection	Electric Source		
	AC	DC	AC→DC Rectified
Terminal Box Type	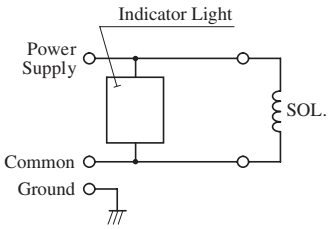	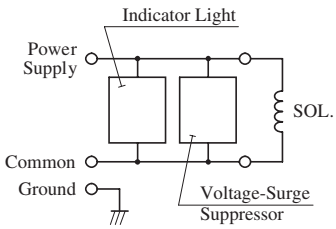	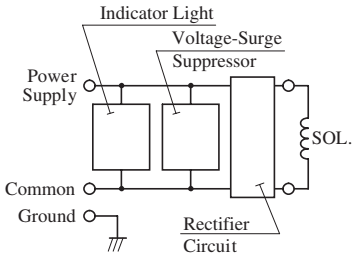
Plug-in Connector Type	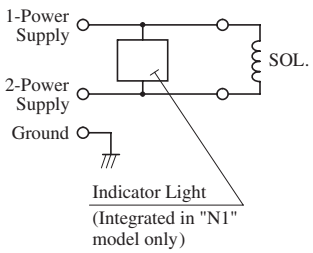	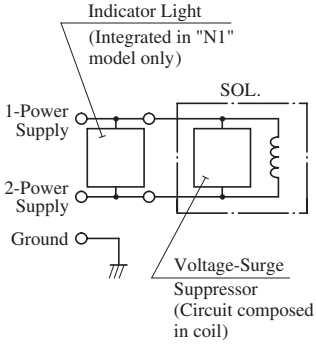	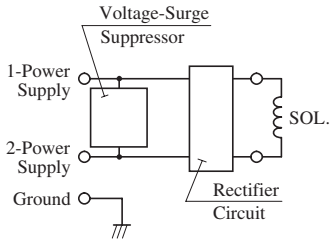

List of Seals

∗-DSG-01-∗∗∗-∗-70/7090

Spring Offset type

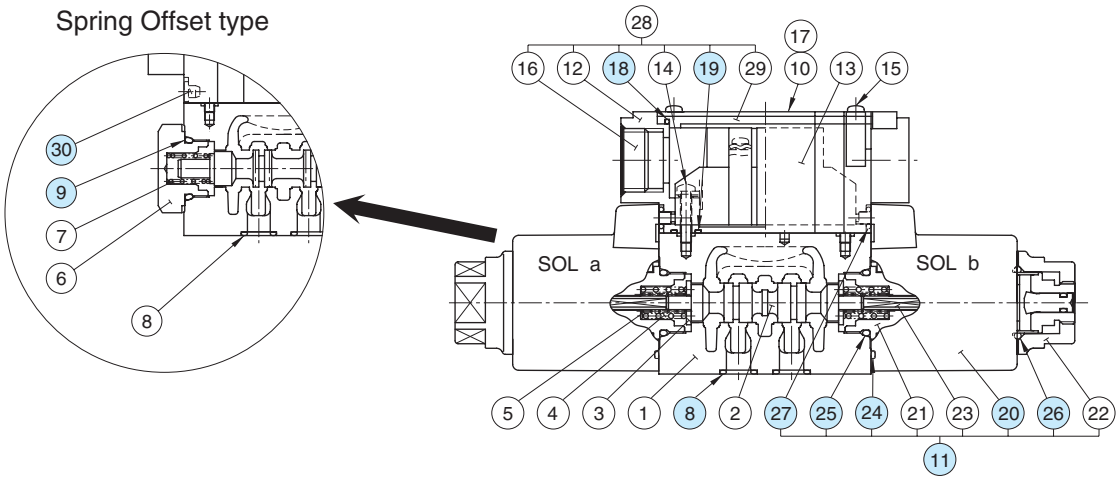

∗-DSG-01-∗∗∗-∗-N/N1-70/7090

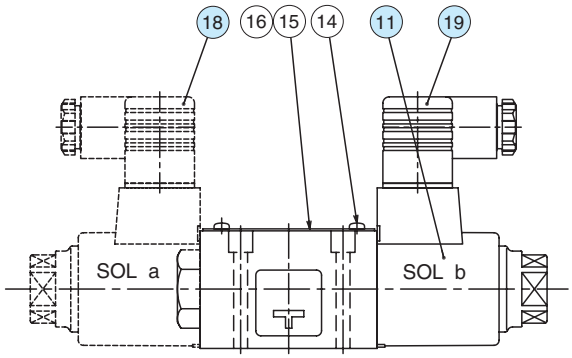

List of Seals

Item	Name of Parts	Part Numbers	Qty.			Remarks
			3C∗	2D∗	2B∗	
8	O-Ring	SO-NB-A-012 (NBR, Hs90)	4	4	4	
9	O-Ring	SO-NB-P18	—	—	1	
18	Packing	1790S-VK421290-8	1	1	1	
19	O-Ring	S6	2	2	2	
24	O-Ring	AS 568-026 (NBR, Hs70)	2	2	1	Included in Solenoid Ass'y (Item 11)
25	O-Ring	SO-NB-P18	2	2	1	
26	O-Ring	SO-NA-P20	2	2	1	
27	O-Ring	SO-NA-P4	4	4	2	
30	Plug	1790S-VK418329-9	—	—	2	

★When ordering the O-Rings, please specify the seal kit number from the table below.

Valve Model Numbers	Seal Kit No.	O-Ring Details for Seal Kit
∗-DSG-01-∗∗∗-∗-70/7090	KS-DSG-01-70	8 (4 Pcs.), 9 & 25 (2 Pcs., see above), 27 (4 Pcs.)
∗-DSG-01-∗∗∗-∗-N-70/7090	KS-DSG-01-N-70	8 (4 Pcs.), 9 & 25 (2 Pcs., see above)

● Solenoid Ass'y, Coil, Receptacle and Connector Refer to page 360 for the details of these parts.

Solenoid Ass'y, Coil, Receptacle and Connector Ass'y No.

Valve Model Numbers	⑪ Solenoid Ass'y No.	⑳ Coil No.	⑬ Receptacle Part No.	⑱ Connector Ass'y Part No.	⑲ Connector Ass'y Part No.	Remarks
DSG-01-∗∗∗-A100-70∗	SA1-100-70	C-SA1-100-70	R1-70	—	—	Terminal Box Type
DSG-01-∗∗∗-A120-70∗	SA1-120-70	C-SA1-120-70				
DSG-01-∗∗∗-A200-70∗	SA1-200-70	C-SA1-200-70				
DSG-01-∗∗∗-A240-70∗	SA1-240-70	C-SA1-240-70				
DSG-01-∗∗∗-D12-70∗	SD1-12-70	C-SD1-12-70	KR1-A-70			
DSG-01-∗∗∗-D24-70∗	SD1-24-70	C-SD1-24-70				
DSG-01-∗∗∗-D48-70∗	SD1-48-70	C-SD1-48-70	KR1-B-70			
DSG-01-∗∗∗-R100-70∗	SR1-100-70	C-SR1-100-70	RR1-70			
DSG-01-∗∗∗-R200-70∗	SR1-200-70	C-SR1-200-70				
S-DSG-01-∗∗∗-D12-70∗	SD1-12-S-70	C-SD1-12-70	KR1-A-70			
S-DSG-01-∗∗∗-D24-70∗	SD1-24-S-70	C-SD1-24-70				
S-DSG-01-∗∗∗-D48-70∗	SD1-48-S-70	C-SD1-48-70	KR1-B-70			
S-DSG-01-∗∗∗-R100-70∗	SR1-100-S-70	C-SR1-100-70	RR1-70			
S-DSG-01-∗∗∗-R200-70∗	SR1-200-S-70	C-SR1-200-70				
DSG-01-∗∗∗-A100-N-70∗	SA1-100-N-70	C-SA1-100-N-70	—	GDM-211-A-11	GDM-211-B-11	Plug-in Connector Type
DSG-01-∗∗∗-A120-N-70∗	SA1-120-N-70	C-SA1-120-N-70				
DSG-01-∗∗∗-A200-N-70∗	SA1-200-N-70	C-SA1-200-N-70				
DSG-01-∗∗∗-A240-N-70∗	SA1-240-N-70	C-SA1-240-N-70				
DSG-01-∗∗∗-D12-N-70∗	SD1-12-N-70	C-SD1-12-N-70				
DSG-01-∗∗∗-D24-N-70∗	SD1-24-N-70	C-SD1-24-N-70				
DSG-01-∗∗∗-D48-N-70∗	SD1-48-N-70	C-SD1-48-N-70				
DSG-01-∗∗∗-R100-N-70∗	SR1-100-N-70	C-SR1-100-N-70		GDME-211-R-A-10	GDME-211-R-B-10	
DSG-01-∗∗∗-R200-N-70∗	SR1-200-N-70	C-SR1-200-N-70				
S-DSG-01-∗∗∗-D12-N-70∗	SD1-12-S-N-70	C-SD1-12-N-70		GDM-211-A-11	GDM-211-B-11	
S-DSG-01-∗∗∗-D24-N-70∗	SD1-24-S-N-70	C-SD1-24-N-70				
S-DSG-01-∗∗∗-D48-N-70∗	SD1-48-S-N-70	C-SD1-48-N-70				
S-DSG-01-∗∗∗-R100-N-70∗	SR1-100-S-N-70	C-SR1-100-N-70	—	GDME-211-R-A-10	GDME-211-R-B-10	
S-DSG-01-∗∗∗-R200-N-70∗	SR1-200-S-N-70	C-SR1-200-N-70				
DSG-01-∗∗∗-A100-N1-70∗	SA1-100-N-70	C-SA1-100-N-70		GDML-211-1-11	GDML-211-1-11	Plug-in Connector with Indicator Light
DSG-01-∗∗∗-A120-N1-70∗	SA1-120-N-70	C-SA1-120-N-70				
DSG-01-∗∗∗-A200-N1-70∗	SA1-200-N-70	C-SA1-200-N-70				
DSG-01-∗∗∗-A240-N1-70∗	SA1-240-N-70	C-SA1-240-N-70				
DSG-01-∗∗∗-D12-N1-70∗	SD1-12-N-70	C-SD1-12-N-70		GDML-211-2-11	GDML-211-2-11	
DSG-01-∗∗∗-D24-N1-70∗	SD1-24-N-70	C-SD1-24-N-70		GDML-211-3-11	GDML-211-3-11	
DSG-01-∗∗∗-D48-N1-70∗	SD1-48-N-70	C-SD1-48-N-70		GDML-211-1-11	GDML-211-1-11	
S-DSG-01-∗∗∗-D12-N1-70∗	SD1-12-S-N-70	C-SD1-12-N-70		GDML-211-2-11	GDML-211-2-11	
S-DSG-01-∗∗∗-D24-N1-70∗	SD1-24-S-N-70	C-SD1-24-N-70		GDML-211-3-11	GDML-211-3-11	
S-DSG-01-∗∗∗-D48-N1-70∗	SD1-48-S-N-70	C-SD1-48-N-70		GDML-211-1-11	GDML-211-1-11	

Note: The connector assembly is not included in the solenoid assembly.

3/8 Solenoid Operated Directional Valves, DSG-03 Series

These are epoch-making solenoid operated valves of high pressure, high flow which have been developed incorporating a unique design concept into every part of the valve including the solenoid. With wet type solenoids, these valves ensure the low noise and the long life, moreover, ensure no leakage of oil outside of the valves.

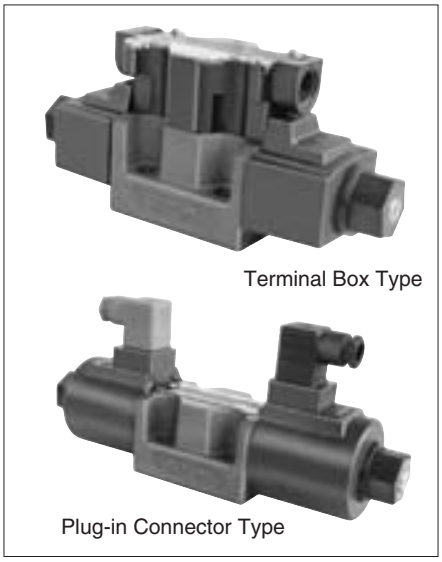

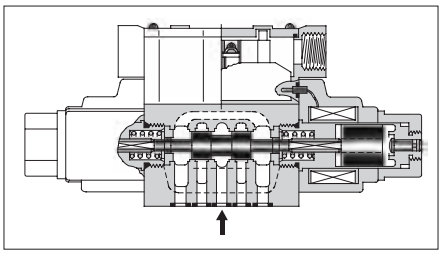

- **Wide Range of Models**
  Choose the optimum valve to meet your need from a large selection available. The DSG-03 50 design series solenoid operated directional valves are classified into the two basic models.
  - Standard type …. Useable at high pressure: 31.5 MPa (4570 PSI) and high flow: 120 L/min (31.7 U.S.GPM)
  - Shockless type …. A noise at spool changeover and a vibration in piping can be reduced to a minimum.
- **Stable Operation**
  With a strong magnet and spring force, the valves are tough against contamination and thus ensure a stable operation.
- **Usable in products of various standards**
  CE/UL/CSA certified products are available.

Specifications

Valve Type	Model Numbers	Max. Flow ★2 L/min (U.S.GPM)	Max. Operating Pressure MPa (PSI)	Max. T-Line Back Pres. MPa (PSI)	Max. Changeover Frequency min^{-1} (Cycles/Min)	Approx. Mass kg(1bs.) Type of Solenoid AC	DC, R, RQ
Standard Type	DSG-03-3C∗-∗-50/5090	120 (31.7)	31.5 (4570) {Spool Type 60 Only 25 (3630)}	16 (2320)	240 (R Type Sol. Only 120)	3.6 (7.9)	5 (11)
	DSG-03-2D2-∗-50/5090						
	DSG-03-2B∗-∗-50/5090					2.9 (6.4)	3.6 (7.9)
Shockless Type	S-DSG-03-3C∗-∗-50/5090	120 (31.7)	25 (3630)	16 (2320)	120	—	5 (11)
	S-DSG-03-2B2-∗-50/5090						3.6 (7.9)
Low Wattage (14W)Type ★1	L-DSG-03-3C∗-∗-50/5090	60 (15.9)	16 (2320)	16 (2320)	240 (R Type Sol. Only 120)	3.6 (7.9)	5 (11)
	L-DSG-03-2D2-∗-50/5090						
	L-DSG-03-2B∗-∗-50/5090					2.9 (6.4)	3.6 (7.9I

★1 For details of L-DSG-03, please contact us.
★2 The maximum flow means the limited flow without inducing any abnormality to the operation (changeover) of the valve. The maximum flow differs according to the spool type and operating conditions. For details, please refer to the "List of Standard Models and Maximum Flow" on pages 364 to 368.

Sub-plate

Piping Size	Japanese Standard "JIS" Sub-plate Model Numbers	Thread Size	European Design Standard Sub-plate Model Numbers	Thread Size	N.American Design Standard Sub-plate Model Numbers	Thread Size	Approx. Mass kg (lbs.)
3/8	DSGM-03-40	Rc 3/8	DSGM-03-2180	3/8 BSP.F	DSGM-03-2190	3/8 NPT	3.0 (6.6)
1/2	DSGM-03X-40	Rc 1/2	DSGM-03X-2180	1/2 BSP.F	DSGM-03X-2190	1/2 NPT	3.0 (6.6)
3/4	DSGM-03Y-40	Rc 3/4	DSGM-03Y-2180	3/4 BSP.F	DSGM-03Y-2190	3/4 NPT	4.7 (10.4)

● Sub-plates are available. Specify the sub-plate model number from the table above.
When sub-plates are not used, the mounting surface should have a good machined finish.

Mounting Bolts

For socket head cap screws in the table below are included.

Descriptions	Soc. Hd. Cap Screw (4 pcs.)	Tightening Torque
Japanese Standard "JIS" European Design Standard	M6 × 35 Lg.	12 - 15 Nm (106 - 133 in. 1bs.)
N. American Design Standard	1/4-20 UNC × 1-1/2 Lg.	

Solenoid Ratings

Valve Type	Electric source	Coil Type	Frequency (Hz)	Voltage (V)		Current & Power at Rated Voltage		
				Source Rating	Serviceable Range	Inrush (A)★2	Holding (A)	Power (W)
Standard Type	AC★1	A100	50	100	80 - 110	5.37	0.90	—
			60	100	90 - 120	4.57	0.63	
				110		5.03	0.77	
		A120	50	120	96 - 132	4.48	0.75	
			60		108 - 144	3.81	0.52	
		A200	50	200	160 - 220	2.69	0.45	
			60	200	180 - 240	2.29	0.31	
				220		2.52	0.38	
		A240	50	240	192 - 264	2.24	0.37	
			60		216 - 288	1.91	0.26	
Shockless Type	DC (K Series)	D12	—	12	10.8 - 13.2	—	3.16	38
		D24		24	21.6 - 26.4		1.57	
		D100		100	90 - 110		0.38	
	AC→DC Rectified (R)	R100	50/60	100	90 - 110	—	0.43	38
		R200		200	180 - 220		0.21	
	AC→DC Rectified (RQ) (Quick Return)	RQ100	50/60	100	90 - 110	—	0.43	38

★1. AC solenoid is not available in shockless type.
R or RQ type models with built-in current rectifier is recommended for shockless operation with AC power.

★2. Inrush current in the above table show rms values at maximum stroke.

★3. There are more coil types other than the above. For details, please make inquiries .

The coil type numbers in the shaded column are handled as optional extras. In case these coils are required to be chosen, please confirm the time of delivery with us before ordering .

Options

● Push Button with Lock Nut

Can be used for manual changeover of spool. The push button can be locked in the pressed condition.

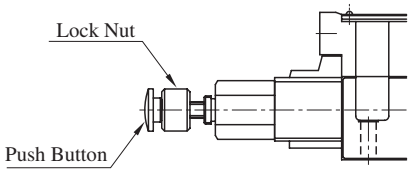

● Plug-in Connector with Solenoid Indicator Light

These are the indicator light incorporated plug-in connector type solenoids. Energisation or de-energisation of the solenoid can be easily identified with the incorporated indicator light.

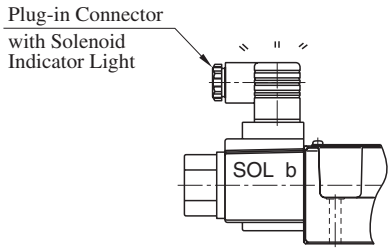

● M8 Mounting Bolts.

As the mounting bolts, M6 socket head cap screws are used for the standard valves, however, M8 socket head cap screws are also available for supply as optional extras. In case the M8 screws are required, suffix "02" to the design number of both valve and sub-plate model number like below.

(Example)

Valve: DSG-03-3C2-A100-50<u>02</u>
Sub-plate: DSGM-03-40<u>02</u>

The valve is supplied with 4 pcs. hexagon socket head cap screws M8 × 38 Lg.

Model Number Designation

F-	S-	DSG	-03	-2	B	2	A	-D24	-C	-N	-50	*	-L
Special Seals	Shockles Type	Series Number	Valve Size	Number of Valve Positions	Spool-Spring Arrangement	Spool Type	Special Two Position Valve (Omit if not required)	Coil Type	Manual Override	Electrical Conduit Connection	Design Number	Design Standard	Models with Reverse Mtg. of Solenoid (Omit if not required)
F: For Phosphate Ester Type Fluids (Omit if not required)	**None**: Standard Type	**DSG**: Solenoid Operated Directional Valve	**03**	**3**: Three Positions	**C**: Spring Centred	**2, 3, 4, 40, 5, 60, 9, 10, 11, 12**	—	AC: **A100, A120, A200, A240** DC: **D12, D24, D100** R: (AC→DC) **R100, R200** RQ: (AC→DC) **RQ100**	**None**: Manual Override Pin	**None**: Terminal Box Type	**50**	**None**: Japanese Std. "JIS" **90**: N.American Design Std.	—
				2: Two Positions	**D**: No-Spring Detented	**2**	—						
					B: Spring Offset	**2, 3, 8**	**A**[★1] **B**[★1]			**N**:[★2] Plug-in Connector Type **N1**:[★3] Plug-in Connector Type with Indicator Light (Option)		**None**: Japanese Std. "JIS" and European Design Std. **90**: N.American Design Std.	**L**
	S: Shockles Type			**3**: Three Positions	**C**: Spring Centred	**2, 4**	—	DC: **D12, D24, D100** R: (AC DC) **R100, R200** RQ: (AC DC) **RQ100**	**C**: Push Button and Lock Nut (Option)				—
				2: Two Positions	**B**: Spring Offset	**2**	**A**[★1] **B**[★1]						**L**

★1. In case of the special two position valve, please refer to page 369 for details.

★2. N is not available for RQ-type solenoids .

★3. N1 is not available for R and RQ-type solenoids .

In the table above, the symbols or numbers highlighted with shade represent the optional extras. The valves with model number having such optional extras are handles as options, therefore, please confirm the time of delivery with us before ordering.

List of Standard Models and The Maximum Flow

Models with AC Solenoids: DSG-03-∗∗∗-A∗

No. of Valve Positions	Spool-Spring Arrangement	Model Numbers	Graphic Symbols	Max. Flow L/min: P→A, B→A, B→T				P→A [Port "B" Blocked]				P→B [Port "A" Blocked]			
				Working Pressure MPa				Working Pressure MPa				Working Pressure MPa			
				10	16	25	31.5	10	16	25	31.5	10	16	25	31.5
Three Positions	Spring Centred	DSG-03-3C2		100	100	100	100	100(70) 90(49)	100(48) 53(30)	96(28) 34(19)	65(24) 26(15)	100(70) 90(49)	100(48) 53(30)	96(28) 34(19)	65(24) 26(15)
		◆★ DSG-03-3C3		90	90	90	90	100(81) 100(81)	100(81) 100(81)	100(81) 100(81)	100(81) 100(81)	100(81) 100(81)	100(81) 100(81)	100(81) 100(81)	100(81) 100(81)
		DSG-03-3C4		80	80	80(65) 75(20)	80(25) 30(15)	100(58) 90(47)	100(33) 50(26)	76(22) 28(18)	46(19) 22(15)	100(58) 90(47)	100(33) 50(26)	76(22) 28(18)	46(19) 22(15)
		DSG-03-3C40		100	100	100	100(75) 100(25)	100(62) 62(40)	100(39) 47(26)	84(21) 27(16)	48(18) 20(12)	100(62) 62(40)	100(39) 47(26)	84(21) 27(16)	48(18) 20(12)
		◆★ DSG-03-3C5		30	30	30	30	26	21	18	16	30	28	28	28
		★ DSG-03-3C60		70	70	70	—	100	100	100	—	100	100	100	—
		DSG-03-3C9		100	100	100	100	60	60	60	60	60	60	60	60
		◆ DSG-03-3C10		80	80	80(30) 30(25)	80(20) 20(15)	100(55) 60(38)	100(36) 47(24)	60(21) 23(14)	34(16) 17(11)	100(55) 60(38)	100(36) 47(24)	60(21) 23(14)	34(16) 17(11)
		◆ DSG-03-3C11		100	100	100	100	100(80) 80(60)	100(65) 70(46)	85(35) 51(32)	62(28) 45(25)	100(80) 80(60)	100(65) 70(46)	85(35) 51(32)	62(28) 45(25)
		◆ DSG-03-3C12		90	90	90(30) 40(20)	90(20) 20(15)	100(55) 60(38)	100(36) 47(24)	60(21) 23(14)	34(16) 17(11)	100(55) 60(38)	100(36) 47(24)	60(21) 23(14)	34(16) 17(11)
Two Positions	No-Spring Detented	DSG-03-2D2		100	100	100	100	40	40	30	28	60	60	40	35
	Spring Offset	DSG-03-2B2		100 100(90)	100 100(90)	100 100(90)	100 100(90)	34	24	20	19	100(62) 80(42)	100(62) 73(36)	100(44) 63(34)	94(37) 51(33)
		DSG-03-2B3		100 100(75)	100 100(75)	100 100(75)	100 100(75)	57	57	57	57	100(79) 92(55)	100(72) 89(46)	100(64) 78(28)	100(59) 70(27)
		◆ DSG-03-2B8		—	—	—	—	26	19	18	16	100(35) 45(21)	87(15) 34(12)	61(9) 15(9)	49(7) 11(6)

Notes : 1. The relation between the maximum flow in the table above and the frequency/voltage (within the serviceable voltage) is as shown below.

(Example)

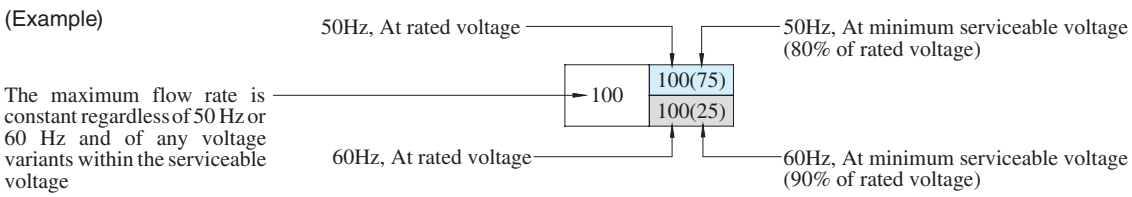

2. For the maximum flow rate in P→T of the valves with a ★ mark, please see page 368.

The valve models with a ◆ mark are handled as Options. If you choose such valves, check the time of delivery beforehand.

List of Standard Models and The Maximum Flow

- Models with DC Solenoids: DSG-03-∗∗∗-D∗
- Models with R Type Solenoids: DSG-03-∗∗∗-R∗
- Models with RQ Type Solenoids: DSG-03-∗∗∗-RQ100∗

No. of Valve Positions	Spool-Spring Arrangement	Model Numbers	Graphic Symbols	Max. Flow L/min											
				P → A → B → T, P → B → A → T				P → A [Port "B" Blocked]				P → B [Port "A" Blocked]			
				Working Pressure MPa				Working Pressure MPa				Working Pressure MPa			
				10	16	25	31.5	10	16	25	31.5	10	16	25	31.5
Three Positions	Spring Centred	DSG-03-3C2		120	120	120	120	120	120 100	80 54	55 43	120	120 100	80 54	55 43
		◆★ DSG-03-3C3		120	120	120	120	120	120	120	120	120	120	120	120
		DSG-03-3C4		120	120	120	120	120	120	84 65	64 53	120	120	84 65	64 53
		DSG-03-3C40		120	120	120	120	120	120 104	62 57	49 42	120	120 104	62 57	49 42
		◆★ DSG-03-3C5		50	50	50	50	35	24	21	20	45	45	45	45
		★ DSG-03-3C60		120	120	120	—	120	120	120	—	120	120	120	—
		DSG-03-3C9		120	120	120	120	100	100	100	100	100	100	100	100
		◆ DSG-03-3C10		120	120	120 65	65 50	120	112 69	60 46	51 40	120	112 69	60 46	51 40
		◆ DSG-03-3C11		120	120	120	120	100	100	80 62	65 52	100	100	80 62	65 52
		◆ DSG-03-3C12		120	120	120 65	65 50	120	120 86	62 47	51 40	120	120 86	62 47	51 40
Two Positions	No-Spring Detented	DSG-03-2D2		120	120	120	120	45	37	30	28	60	60	40	35
	Spring Offset	DSG-03-2B2		110 100	110 100	110 100	110 100	68	47	38	38	120	114 83	75 58	63 48
		DSG-03-2B3		120	120	120	120	77	77	77	77	120	120	120	120 103
		◆ DSG-03-2B8		—	—	—	—	53	33	24	23	120	120 62	62 40	47 37

Notes) 1. The relation between the maximum flow in the table above and the voltage (within the serviceable voltage) is as shown below.

(Example)

The maximum flow rate is constant regardless of any voltage variants within the serviceable voltage → 120

120
65

At rated voltage [after temperature rise and saturated]

At minimum serviceable voltage (90% of rated voltage) [after temperature rises and saturated]

2. For the maximum flow rate in P → T of the valves with a ★ mark, please see page 368.

The valve models with a ◆ mark are handled as Options. If you choose such valves, check the time of delivery beforehand.

List of Standard Models and The Maximum Flow

Models with AC Solenoids: DSG-03-∗∗∗-A∗

No. of Valve Positions	Spool-Spring Arrangement	Model Numbers	Graphic Symbole	Max. Flow U.S.GPM: P → A → B → T / P → B (Port "B" Blocked)				P → A [Port "B" Blocked]				P → B [Port "A" Blocked]			
				Working Pressure PSI				Working Pressure PSI				Working Pressure PSI			
				1450	2320	3630	4570	1450	2320	3630	4570	1450	2320	3630	4570
Three Positions	Spring Centred	DSG-03-3C2		26.4	26.4	26.4	26.4	26.4 (18.5)	26.4 (12.7)	25.4 (7.4)	17.2 (6.3)	26.4 (18.5)	26.4 (12.7)	25.4 (7.4)	17.2 (6.3)
								23.8 (12.9)	14.0 (7.9)	9.0 (5.0)	6.7 (4.0)	23.8 (12.9)	14.0 (7.9)	9.0 (5.0)	6.7 (4.0)
		◆★ DSG-03-3C3		23.8	23.8	23.8	23.8	26.4 (21.4)	26.4 (21.4)	26.4 (21.4)	26.4 (21.4)	26.4 (21.4)	26.4 (21.4)	26.4 (21.4)	26.4 (21.4)
								26.4 (21.4)	26.4 (21.4)	26.4 (21.4)	26.4 (21.4)	26.4 (21.4)	26.4 (21.4)	26.4 (21.4)	26.4 (21.4)
		DSG-03-3C4		21.1	21.1	21.1 (17.2)	21.1 (6.6)	26.4 (15.3)	26.4 (8.7)	20.1 (5.8)	12.2 (5.0)	26.4 (15.3)	26.4 (8.7)	20.1 (5.8)	12.2 (5.0)
						19.8 (5.3)	7.9 (4.0)	23.8 (12.4)	13.2 (6.9)	7.4 (4.8)	5.8 (4.0)	23.8 (12.4)	13.2 (6.9)	7.4 (4.8)	5.8 (4.0)
		DSG-03-3C40		26.4	26.4	26.4	26.4 (19.8)	26.4 (16.4)	26.4 (10.3)	22.2 (5.5)	12.7 (4.8)	26.4 (16.4)	26.4 (10.3)	22.2 (5.5)	12.7 (4.8)
							26.4 (6.6)	16.4 (10.6)	12.4 (6.9)	7.1 (4.2)	5.3 (3.2)	16.4 (10.6)	12.4 (6.9)	7.1 (4.2)	5.3 (3.2)
		◆★ DSG-03-3C5		7.9	7.9	7.9	7.9	6.9	5.5	4.8	4.2	7.9	7.4	7.4	7.4
		★ DSG-03-3C60		18.5	18.5	18.5	—	26.4	26.4	26.4	—	26.4	26.4	26.4	—
		DSG-03-3C9		26.4	26.4	26.4	26.4	15.9	15.9	15.9	15.9	15.9	15.9	15.9	15.9
		◆ DSG-03-3C10		21.1	21.1	21.1 (7.9)	21.1 (5.3)	26.4 (14.5)	26.4 (9.5)	15.9 (5.5)	9.0 (4.2)	26.4 (14.5)	26.4 (9.5)	15.9 (5.5)	9.0 (4.2)
						7.9 (6.6)	5.3 (4.0)	15.9 (10)	12.4 (6.3)	6.1 (3.7)	4.5 (2.9)	15.9 (10)	12.4 (6.3)	6.1 (3.7)	4.5 (2.9)
		◆ DSG-03-3C11		26.4	26.4	26.4	26.4	26.4 (21.1)	26.4 (17.2)	22.5 (9.2)	16.4 (7.4)	26.4 (21.1)	26.4 (17.2)	22.5 (9.2)	16.4 (7.4)
								21.1 (15.9)	18.5 (12.2)	13.5 (8.5)	11.9 (6.6)	21.9 (15.9)	18.5 (12.2)	13.5 (8.5)	11.9 (6.6)
		◆ DSG-03-3C12		23.8	23.8	23.8 (7.9)	23.8 (5.3)	26.4 (14.5)	26.4 (9.5)	15.9 (5.5)	9.0 (4.2)	26.4 (14.5)	26.4 (9.5)	15.9 (5.5)	9.0 (4.2)
						10.6 (5.3)	5.3 (4.0)	15.9 (10)	12.4 (6.3)	6.1 (3.7)	4.5 (2.9)	15.9 (10)	12.4 (6.3)	6.1 (3.7)	4.5 (2.9)
Two Positions	No-Spring Detented	DSG-03-2D2		26.4	26.4	26.4	26.4	10.6	10.6	7.9	7.4	15.9	15.9	10.6	9.2
	Spring Offset	DSG-03-2B2		26.4	26.4	26.4	26.4	9.0	6.3	5.3	5.0	26.4 (16.4)	26.4 (16.4)	26.4 (11.6)	24.8 (9.8)
				26.4 (23.8)	26.4 (23.8)	26.4 (23.8)	26.4 (23.8)					21.1 (11.1)	19.3 (9.5)	16.6 (9.0)	13.5 (8.7)
		DSG-03-2B3		26.4	26.4	26.4	26.4	15.1	15.1	15.1	15.1	26.4 (20.9)	26.4 (19)	26.4 (16.9)	26.4 (15.6)
				26.4 (19.8)	26.4 (19.8)	26.4 (19.8)	26.4 (19.8)					24.3 (14.5)	23.5 (12.2)	20.6 (7.4)	18.5 (7.1)
		◆ DSG-03-2B8		—	—	—	—	6.9	5.0	4.8	4.2	26.4 (9.2)	23 (4.0)	16.1 (2.4)	12.9 (1.8)
												11.9 (5.5)	9.0 (3.2)	4.0 (2.4)	2.9 (1.6)

Notes: 1. The relation between the maximum flow in the table above and the voltage (within the serviceable voltage) is as shown below.

(Example)

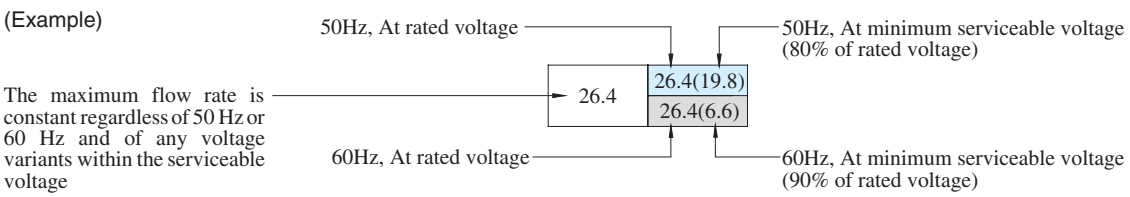

2. For the maximum flow rate in P → T of the valves with a ★ mark, please see page 368.

The valve models with a ◆ mark are handled as Options. If you choose such valves, check the time of delivery beforehand.

List of Standard Models and The Maximum Flow

- Models with DC Solenoids: DSG-03-∗∗∗-D∗
- Models with R Type Solenoids: DSG-03-∗∗∗-R∗
- Models with RQ Type Solenoids: DSG-03-∗∗∗-RQ100∗

No. of Valve Positions	Spool-Spring Arrangement	Model Numbers	Graphic Symbols	Max. Flow U.S. GPM											
				P → A → B → T, P → B → A → T				P → A [Port "B" Blocked]				P → B [Port "A" Blocked]			
				Working Pressure PSI				Working Pressure PSI				Working Pressure PSI			
				1450	2320	3630	4570	1450	2320	3630	4570	1450	2320	3630	4570
Three Positions	Spring Centred	DSG-03-3C2		31.7	31.7	31.7	31.7	31.7	31.7	21.1	14.5	31.7	31.7	21.1	14.5
									26.4	14.3	11.4		26.4	14.3	11.4
		◆★ DSG-03-3C3		31.7	31.7	31.7	31.7	31.7	31.7	31.7	31.7	31.7	31.7	31.7	31.7
		DSG-03-3C4		31.7	31.7	31.7	31.7	31.7	31.7	22.2	16.9	31.7	31.7	22.2	16.9
										17.2	14			17.2	14
		DSG-03-3C40		31.7	31.7	31.7	31.7	31.7	31.7	16.4	12.9	31.7	31.7	16.4	12.9
									27.5	15.1	11.1		27.5	15.1	11.1
		◆★ DSG-03-3C5		13.2	13.2	13.2	13.2	9.2	6.3	5.5	5.3	11.9	11.9	11.9	11.9
		★ DSG-03-3C60		31.7	31.7	31.7	—	31.7	31.7	31.7	—	31.7	31.7	31.7	—
		DSG-03-3C9		31.7	31.7	31.7	31.7	26.4	26.4	26.4	26.4	26.4	26.4	26.4	26.4
		◆ DSG-03-3C10		31.7	31.7	31.7	17.2	31.7	29.6	15.9	13.5	31.7	29.6	15.9	13.5
						17.2	13.2		18.2	12.2	10.6		18.2	12.2	10.6
		◆ DSG-03-3C11		31.7	31.7	31.7	31.7	26.4	26.4	21.1	17.2	26.4	26.4	21.1	17.2
										16.4	13.7			16.4	13.7
		◆ DSG-03-3C12		31.7	31.7	31.7	17.2	31.7	31.7	16.4	13.5	31.7	31.7	16.4	13.5
						17.2	13.2		22.7	12.4	10.6		22.7	12.4	10.6
Two Positions	No-Spring Detented	DSG-03-2D2		31.7	31.7	31.7	31.7	11.9	9.8	7.9	7.4	15.9	15.9	10.6	9.2
	Spring Offset	DSG-03-2B2		29.1	29.1	29.1	29.1	18	12.4	10	10	31.7	30.1	19.8	16.6
				26.4	26.4	26.4	26.4						21.9	15.3	12.7
		DSG-03-2B3		31.7	31.7	31.7	31.7	20.3	20.3	20.3	20.3	31.7	31.7	31.7	31.7
															27.2
		DSG-03-2B8		—	—	—	—	14	8.7	6.3	6.1	31.7	31.7	16.4	12.4
													16.4	10.6	9.8

Notes) 1. The relation between the maximum flow in the table above and the voltage (within the serviceable voltage) is as shown below.

(Example)

The maximum flow rate is constant regardless of any voltage variants within the serviceable voltage → 31.7

22.2
17.2

22.2 — At rated voltage [after temperature rise and saturated]

17.2 — At minimum serviceable voltage (90% of rated voltage) [after temperature rises and saturated]

2. For the maximum flow rate in P → T of the valves with a ★ mark, please see page 368.

The valve models with a ◆ mark are handled as Options. If you choose such valves, check the time of delivery beforehand.

Maximum Flow of Centre By-Pass

In valve type 3C3, 3C5 and 3C60, in case where the actuator is put on in between the cylinder ports A and B as illustrated below and where the actuator moves and suspended at its stroke end and where the valve is then shifted to the neutral position in the suspended state of the actuator, the maximum flow rates available are those as shown as the table below regardless of any voltage in the range of serviceable voltage.

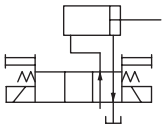

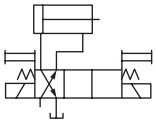

Model Numbers	Graphic Symbols	Max. Flow L/min (U.S.GPM)			
		10 MPa (1450 PSI)	16 MPa (2320 PSI)	25 MPa (3630 PSI)	31.5 MPa (4570 PSI)
DSG-03-3C3-A∗	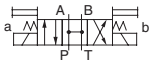	100 (26.4)	100 (26.4)	100 (26.4)	100 (26.4)
DSG-03-3C3-D∗/R∗/RQ100		120 (31.7)	120 (31.7)	120 (31.7)	120 (31.7)
DSG-03-3C5-A∗		26 (6.9)	21 (5.5)	18 (4.8)	16 (4.2)
DSG-03-3C5-D∗/R∗/RQ100		35 (9.2)	24 (6.3)	21 (5.5)	20 (5.3)
DSG-03-3C60-A∗		84 (22.2)	52 (13.7)	52 (13.7)	—
DSG-03-3C60-D∗/R∗/RQ100		68 (18.0)	65 (17.2)	61 (16.1)	—

List of Shockless Models and The Maximum Flow

- Models with DC Solenoids: S-DSG-03-∗∗∗-D∗
- Models with R Type Solenoids: S-DSG-03-∗∗∗-R∗
- Models with RQ Type Solenoids: S-DSG-03-∗∗∗-RQ100

No. of Valve Positions	Spool-Spring Arrangement	Model Numbers	Graphic Symbols	Max. Flow L/min (U.S.GPM)											
				P→A→B→T, P→B→A→T				P → A [Port "B" Blocked]				P → B [Port "A" Blocked]			
				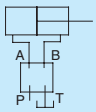											
				Working Pressure MPa (PSI)				Working Pressure MPa (PSI)				Working Pressure MPa (PSI)			
				5 (730)	10 (1450)	16 (2320)	25 (3630)	5 (730)	10 (1450)	16 (2320)	25 (3630)	5 (730)	10 (1450)	16 (2320)	25 (3630)
Three Positions	Spring Centred	S-DSG-03-3C2		120 (31.7)	120 (31.7)	120 (31.7)	120 (31.7)	120 (31.7)	120 (31.7)	75 (19.8)	50 (13.2)	120 (31.7)	120 (31.7)	75 (19.8)	50 (13.2)
									105 (27.7)	65 (17.2)	40 (10.6)		105 (27.7)	65 (17.2)	40 (10.6)
		S-DSG-03-3C4		120 (31.7)	120 (31.7)	85 (22.5)	65 (17.2)	120 (31.7)	120 (31.7)	75 (19.8)	40 (10.6)	120 (31.7)	120 (31.7)	75 (19.8)	40 (10.6)
						70 (18.5)	45 (11.9)		100 (26.4)	65 (17.2)	35 (9.2)		100 (26.4)	65 (17.2)	35 (9.2)
Two Positions	Spring Offset	S-DSG-03-2B2	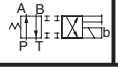	120 (31.7)	100 (26.4)	75 (19.8)	40 (10.6)	39 (10.3)	39 (10.3)	39 (10.3)	39 (10.3)	120 (31.7)	120 (31.7)	105 (27.7)	60 (15.9)
														80 (21.1)	50 (13.2)

Note: The relation between the maximum flow in the table above and the voltage (within the serviceable voltage) is as shown below.

(Example)

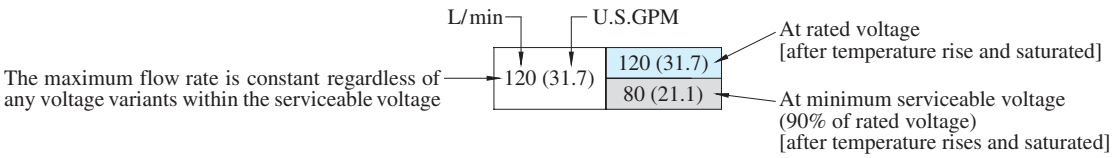

Reverse Mounting of Solenoid

In spring offset type, it is a standard configuration that the solenoid is mounted onto the valve in the SOL b position (side). However, in this particular spool-spring arrangement, the mounting of the solenoid onto the valve in the reverse position -SOL a side- is also available. The graphic symbol for this reverse mounting is as shown below.
As for the valve type 2B∗A and 2B∗B, please refer to the explanation under the heading of "Valves Using Neutral Position and Side Position" given below.

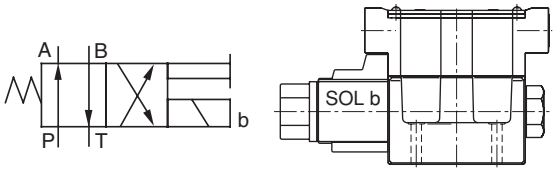

Standard Mtg. of Solenoid

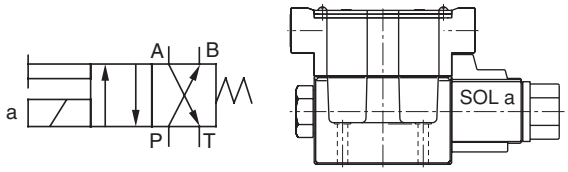

Reverse Mtg. of Solenoid

Valves Using Neutral Position and Side Position (Special Two Position Valve)

Besides the use of the standard 2-position valves aforementioned in the "List of Standard Models and Maximum Flow", the 3-position valves also can be used as the 2-position valves using the two of their three positions. In this case, there are two kinds of the valve available. One is the valve using the neutral position and SOL a position (2B∗A) and another is the valve using the neutral position and SOL b position (2B∗B).

(Example) In case of Spool Type "2"

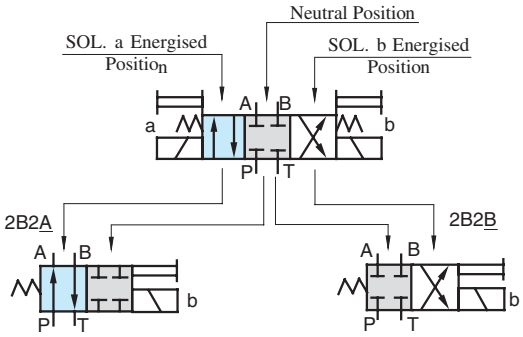

"A": Use of Neutral and SOL. a Energised Position (2B2A)

"B": Use of Neutral and SOL. b Energised Position (2B2B)

Model Numbers	Graphic SymbolsG	
	Standard Mtg. Type	Reverse Mtg. Type
(S-) DSG-03-2B∗A	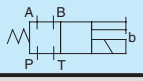	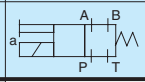
(S-) DSG-03-2B2A		——

Model Numbers	raphic Symbols	
	Standard Mtg. Type	Reverse Mtg. Type
DSG-03-2B∗B		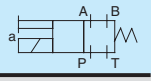
(S-) DSG-03-2B2B		
DSG-03-2B3B		——
(S-) DSG-03-2B4B		——
DSG-03-2B60B		——
DSG-03-2B10B		——

In the above table, the graphic symbols in mounting type highlighted with shade are optional extra, therefore, please confirm the time of delivery with us before ordering.

Typical Changeover Time

Changeover time varies according to oil viscosity, spool type and hydraulic circuit.

● Standard Type (Without Shockless Function)

[Test Conditions]
Pressure: 16 MPa (2320 PSI)
Flow Rate: 70 L/min (18.5 U.S.GPM)
Viscosity: 30 mm^2/s (140 SSU)
Voltage: 100 %V (After coil temperature rises and saturated)

[Result of Measurement]

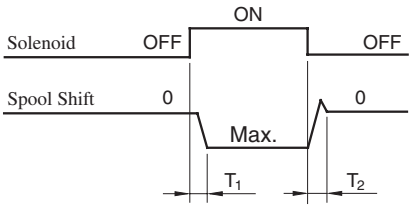

Type	Model Numbers	Changeover Time ms	
		T_1	T_2
Standard Type	DSG-03-3C2-A∗	27	22
	DSG-03-3C2-D∗	97	30
	DSG-03-3C2-R∗	97	204
	DSG-03-3C2-RQ100	97	41

● Shockless Type

[Test Circuit and Conditions]

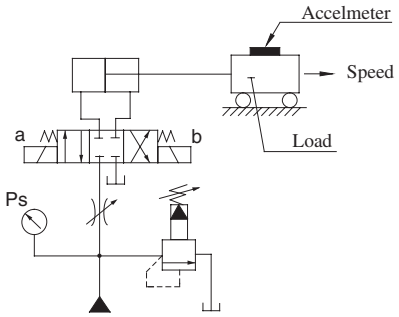

Setting Pressure (Ps): 7 MPa (1020 PSI)
Load (W): 1000 kg (2205 1bs.)
Speed: 8.8 m/min (28.9 ft./min)
Viscosity: 30 mm^2/s (140 SSU)

[Result of Measurement]

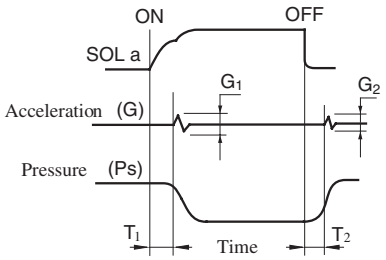

Type	Model Numbers	Time ms		Acceleration m/s^2 (G)	
		T_1	T_2	G_1	G_2
Shockless Type	S-DSG-03-3C2-D∗	110	120	6.4 (.65)	6.4 (.65)
	S-DSG-03-3C2-R∗	110	220		
	S-DSG-03-3C2-RQ100	110	120		

Pressure Drop

Pressure drop curves based on viscosity of 35 mm^2/s (164 SSU) and specific gravity of 0.850.

Standard Type: DSG-03

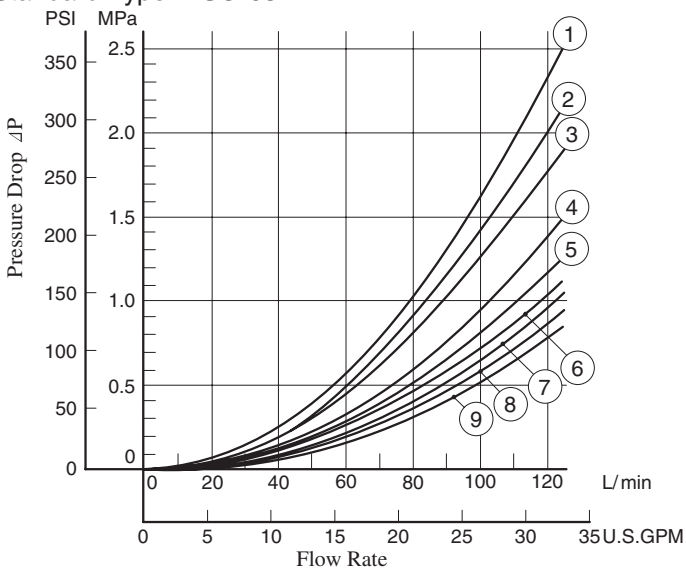

Model Numbers	Pressure Drop Curve Number				
	P→A	B→T	P→ B	A→ T	P→T
DSG-03-3C2	⑦	⑦	⑦	⑦	—
DSG-03-3C3	⑨	⑨	⑨	⑨	⑤
DSG-03-3C4	⑦	⑧	⑦	⑧	—
DSG-03-3C40	⑦	⑦	⑦	⑦	—
DSG-03-3C5	⑨	⑦	⑦	⑨	①
DSG-03-3C60	⑥	⑤	⑥	⑤	①
DSG-03-3C9	⑨	⑦	⑨	⑦	—
DSG-03-3C10	⑦	⑧	⑦	⑦	—
DSG-03-3C11	⑨	⑦	⑦	⑦	—
DSG-03-3C12	⑦	⑦	⑦	⑧	—
DSG-03-2D2	④	③	⑥	⑥	—
DSG-03-2B2	②	①	⑦	⑦	—
DSG-03-2B3	③	②	⑨	⑨	—
DSG-03-2B8	⑥	—	⑤	—	—

Shockless Type: S-DSG-03

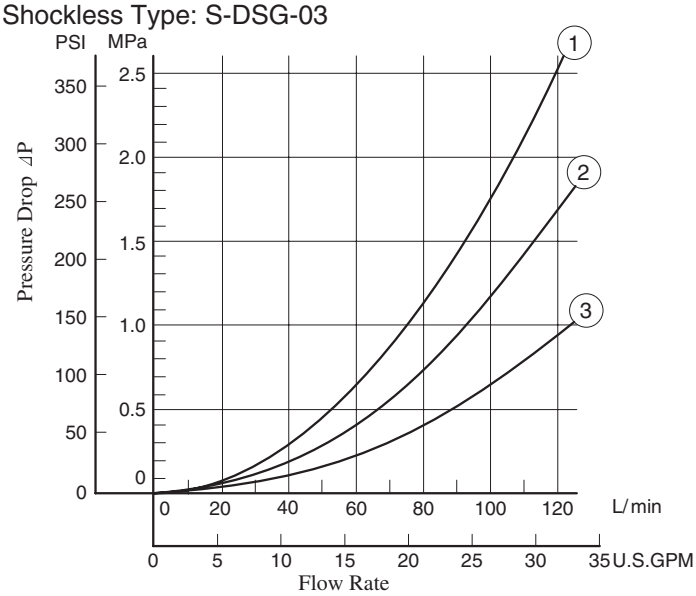

Model Numbers	Pressure Drop Curve Number			
	P→A	B→T	P→B	A→T
S-DSG-03-3C2	②	②	②	②
S-DSG-03-3C4	②	②	③	③
S-DSG-03-2B2	①	②	②	②

- For any other viscosity, multiply the factors in the table below.

Viscosity	mm^2/s	15	20	30	40	50	60	70	80	90	100
	SSU	77	98	141	186	232	278	324	371	417	464
Factor		0.81	0.87	0.96	1.03	1.09	1.14	1.19	1.23	1.27	1.30

- For any other specific gravity (G'), the pressure drop (⊿P') may be obtained from the formula below.

$$\Delta P' = \Delta P\ (G'/0.850)$$

Mounting surface: ISO 4401-AC-05-4-A

TERMINAL BOX TYPE

Models with AC Solenoids: DSG-03- ∗∗∗-A∗ -50/5090

● Double Solenoid: Spring Centred & No-Spring Detended

Model Numbers	"C" Thd.
DSG-03-∗∗∗-A∗-50	G 1/2
DSG-03-∗∗∗-A∗-5090	1/2 NPT

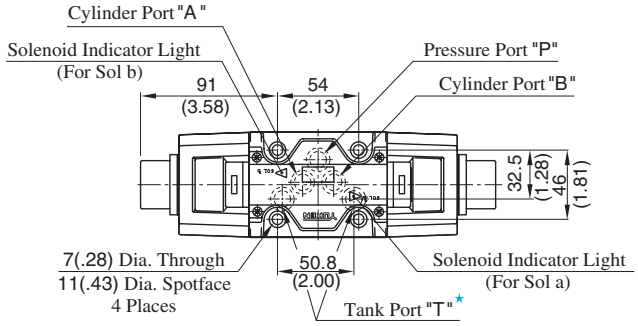

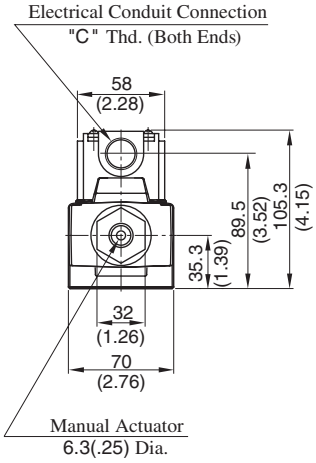

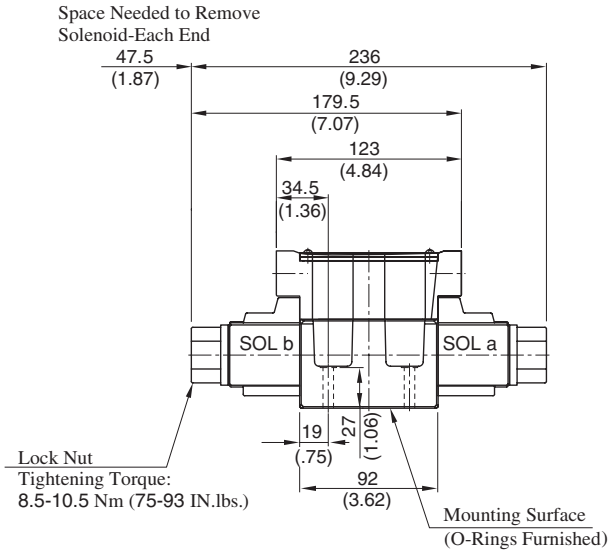

★. Of the two of tank port "T", the tank port in the left side is normally used in our standard sub-plate, though, either side of the tank port "T" can be used without problem.

DIMENSIONS IN MILLIMETRES (INCHES)

● Single Solenoid: Spring Offset

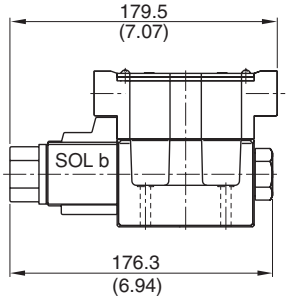

- For other dimensions, refer to "Spring Centred and No-Spring Detented" medels.
- Solenoid being mounted in the reverse position -SOL a side- is also available.

Mounting surface: ISO 4401-AC-05-4-A

TERMINAL BOX TYPE

- Models with DC Solenoids : (S-)DSG-03- ∗∗∗-D∗-50/5090
- Models with R Type Solenoids : (S-)DSG-03-∗∗∗ -R∗ -50/5090
- Models with RQ Type Solenoids : (S-)DSG-03- ∗∗∗ -RQ100-50/5090

- Double Solenoid: Spring Centred & No-Spring Detented
- Single Solenoid: Spring Offset

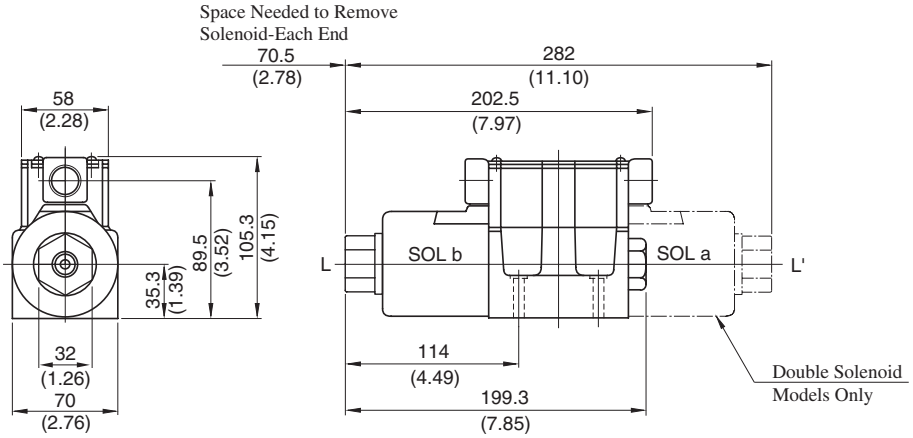

- For other dimensions, refer to Models with AC solenoids (Page 372).

DIMENSIONS IN MILLIMETRES (INCHES)

Sub- plates

DSGM-03∗-40/2180/2190

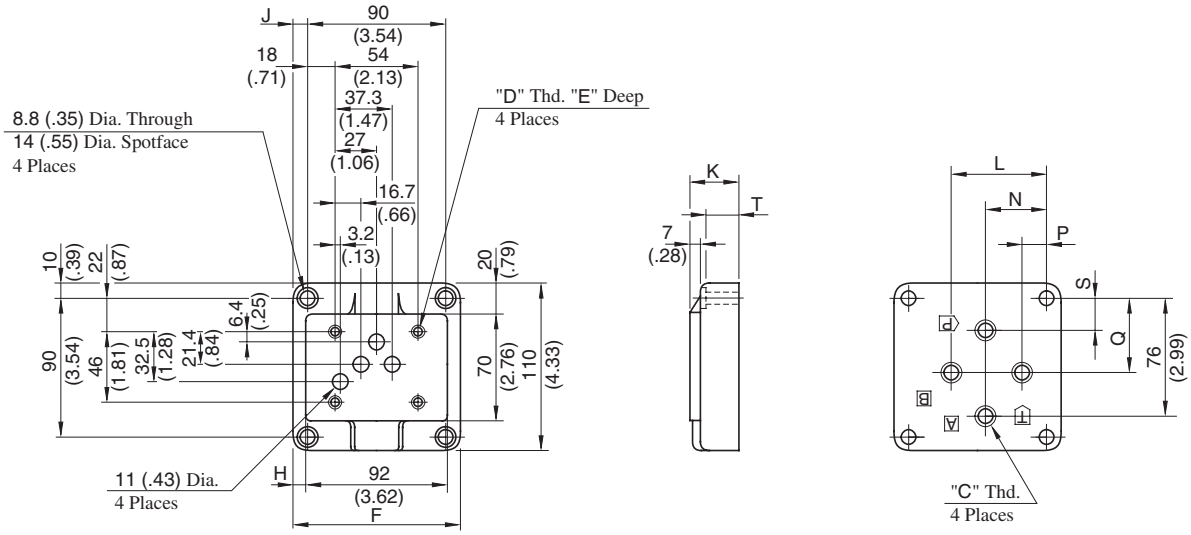

Sub-plate Model Numbers	Piping Size "C" Thd.	"D" Thd.	Dimensions mm (Inches)										
			E	F	H	J	K	L	N	P	Q	S	T
DSGM-03-40	Rc 3/8	M6	13 (.51)	110 (4.33)	9 (.35)	10 (.39)	32 (1.26)	62 (2.44)	40 (1.57)	16 (.63)	48 (1.89)	21 (.83)	24 (.94)
DSGM-03-2180	3/8 BSP.F												
DSGM-03-2190	3/8 NPT	1/4-20 UNC	15 (.59)										
DSGM-03X-40	Rc 1/2	M6	13 (.51)	110 (4.33)	9 (.35)	10 (.39)	32 (1.26)	62 (2.44)	40 (1.57)	16 (.63)	48 (1.89)	21 (.83)	24 (.94)
DSGM-03X-2180	1/2 BSP.F												
DSGM-03X-2190	1/2 NPT	1/4-20 UNC	15 (.59)										
DSGM-03Y-40	Rc 3/4	M6	13 (.51)	120 (4.72)	14 (.55)	15 (.59)	50 (1.97)	80 (3.15)	45 (1.77)	10 (.39)	47 (1.85)	16 (.63)	42 (1.65)
DSGM-03Y-2180	3/4 BSP.F												
DSGM-03Y-2190	3/4 NPT	1/4-20 UNC	15 (.59)										

PLUG-IN CONNECTOR TYPE (N)
PLUG-IN CONNECTOR WITH INDICATOR LIGHT (N1)

Models with AC Solenoids: DSG-03- ∗∗∗ -A∗ - N/N1 -50/5090

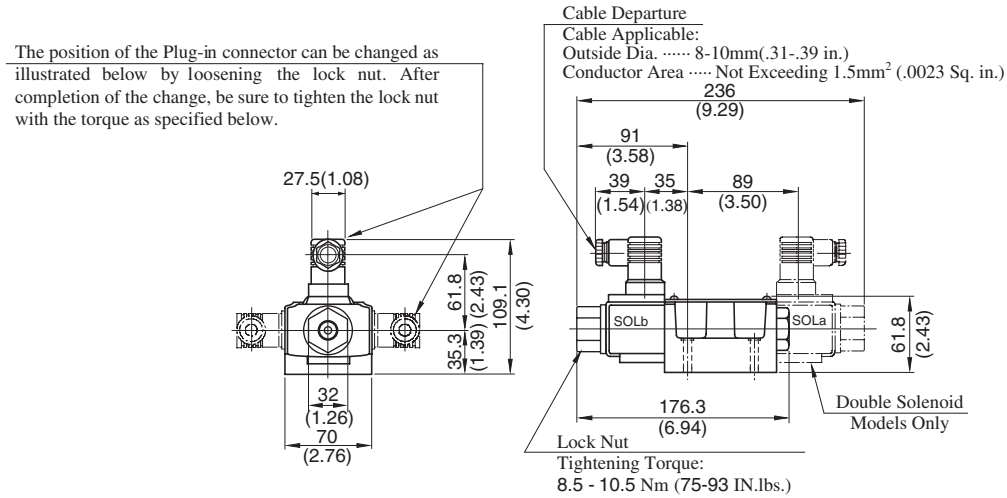

Models with DC Solenoids: (S-)DSG-03- ∗∗∗ -D∗ - N/N1 -50/5090

Models with R Type Solenoids: (S-)DSG-03- ∗∗∗ -R∗ -N-50/5090

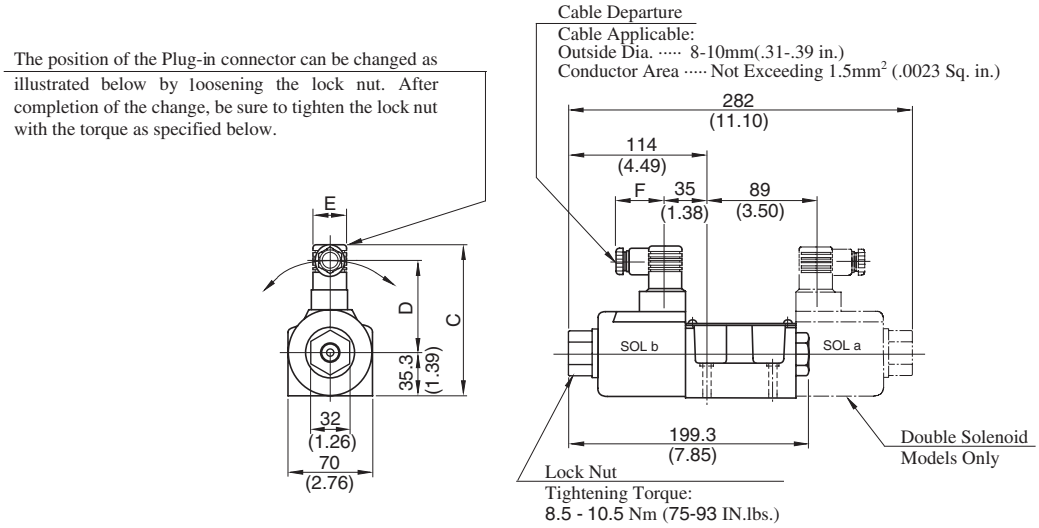

Model Numbers	Dimensions mm (Inches)			
	C	D	E	F
DSG-03-∗∗∗-D∗-N/N1-50/5090	121.1 (4.77)	73.8 (2.91)	27.5 (1.08)	39 (1.54)
DSG-03-∗∗∗-R∗-N-50/5090	124.9 (4.92)	62.6 (2.46)	34 (1.34)	53 (2.09)

- For other dimensions, refer to "Terminal Box Type" (Page 372 – 373).

DIMENSIONS IN MILLIMETRES (INCHES)

Options

Models with Push Button & Lock Nut: (S-)DSG-03-∗∗∗-∗C(- N/N1)-50/5090

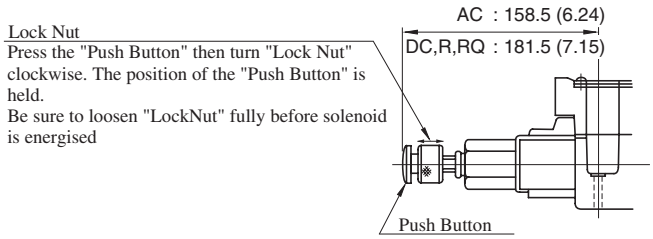

Details of Receptacle

Type of Electrical Conduit Connection	Double Solenoid Type	Single Solenoid Type
Terminal Box Type	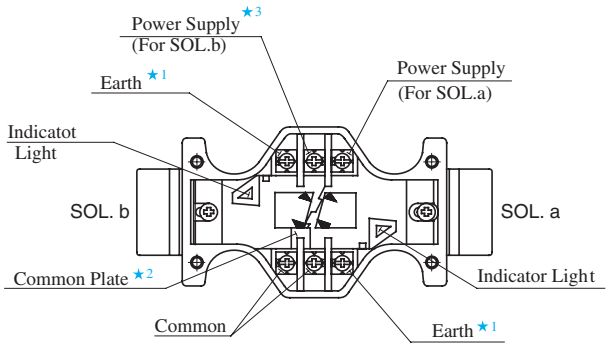	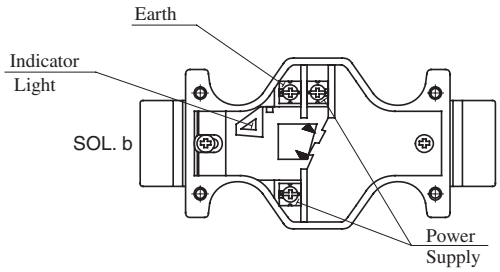
Plug-in Connector Type	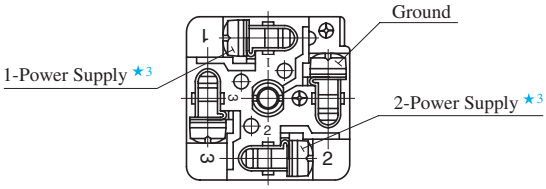	

★1. There are two grounding terminals. You can use either one.
★2. If you do not need the common plate, remove it.
★3. With DC solenoids, polarity is no question.

⚠ DANGER

- Do not perform wiring while the power is on.
  Doing so may result in electric shock, burns or death.
- Make the wiring properly. Improper wiring will cause an irregular movement of the machine, resulting in a grave accident.

Electrical Circuit

Type of Electrical Conduit Connection	Electric Source		
	AC	DC	AC→DC Rectified
Terminal Box Type	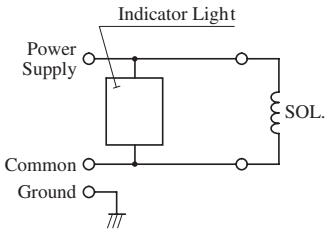	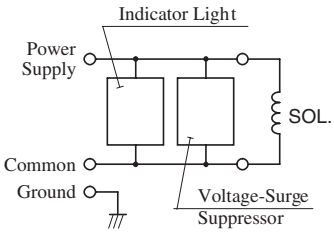	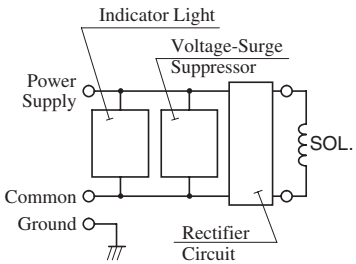
Plug-in Connector Type	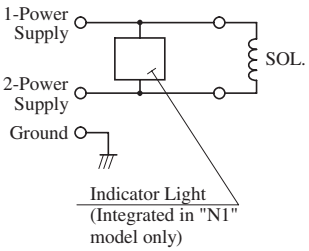	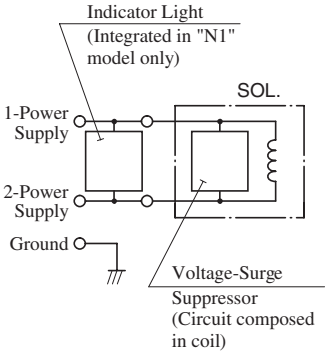	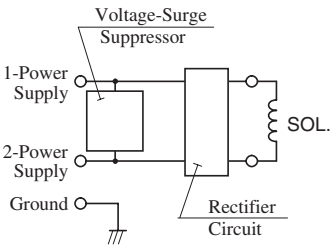

List of Seals

∗-DSG-03-∗∗∗-∗-50/5090

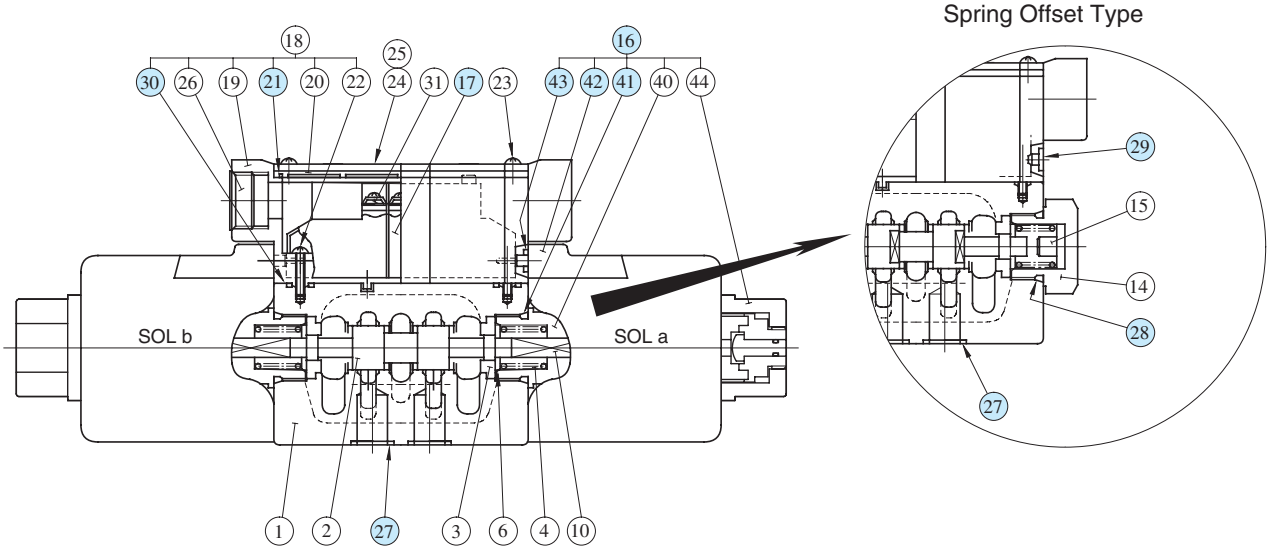

∗-DSG-03-∗∗∗-N/N1-50/5090

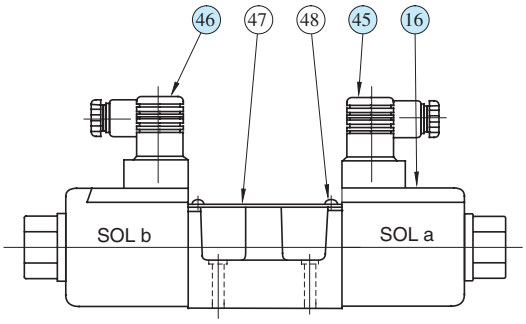

List of Seals

Item	Name of Parts	Part Numbers	Qty.			Remarks
			3C	2D2	2B	
21	Gasket	1751S-VK418689-6	1	1	1	
27	O-Ring	SO-NB-A014(NBR, Hs90)	5	5	5	
28	O-Ring	SO-NB-P21	—	—	1	
29	Plug	1790S-VK418329-9	—	—	2	
30	O-Ring	S6	2	2	2	
41	O-Ring	SO-NB-P21	2	2	1	Included in Solenoid Ass'y (Item 16)
43	O-Ring	SO-NA-P4	4	4	2	

★When ordering the O-Rings, please specify the seal kit number from the table below.

Valve Model Numbers	Seal Kit No.	O-Ring Details for Seal Kit
DSG-03-∗∗∗-∗-50/5090	KS-DSG-03-50	27 (5 Pcs.), 28 & 41 (2 Pcs., see above), 43 (4 Pcs.)
DSG-03-∗∗∗-∗-N-50/5090	KS-DSG-03-N-50	27 (5 Pcs.), 28 & 41 (2 Pcs., see above)

Solenoid Ass'y, Coil, Receptacle and Connector

Refer to Page 377 for the details of these parts.

Solenoid Ass'y, Coil, Receptacle and Connector Ass'y No.

Valve Model Numbers	⑯ Solenoid Ass'y No.	㊷ Coil No.	⑰ Receptacle Part No.	㊺ Connector Ass'y Part No.	㊻ Connector Ass'y Part No.	Remarks
DSG-03-∗∗∗-A100-50∗	SA3-100-51	C-SA3-100-51	R3-60	—	—	Terminal Box Type
DSG-03-∗∗∗-A120-50∗	SA3-120-51	C-SA3-120-51				
DSG-03-∗∗∗-A200-50∗	SA3-200-51	C-SA3-200-51				
DSG-03-∗∗∗-A240-50∗	SA3-240-51	C-SA3-240-51				
DSG-03-∗∗∗-D12-50∗	SD3-12-51	C-SD3-12-51	KR3-A-60			
DSG-03-∗∗∗-D24-50∗	SD3-24-51	C-SD3-24-51				
DSG-03-∗∗∗-D100-50∗	SD3-100-51	C-SD3-100-51	KR3-C-60			
DSG-03-∗∗∗-R100-50∗	SR3-100-51	C-SR3-100-51	RR3-60			
DSG-03-∗∗∗-R200-50∗	SR3-200-51	C-SR3-200-51				
DSG-03-∗∗∗-RQ100-50∗	SR3-100-51	C-SR3-100-51	QR3-C-60			
S-DSG-03-∗∗∗-D12-50∗	SD3-12-S-51	C-SD3-12-51	KR3-A-60			
S-DSG-03-∗∗∗-D24-50∗	SD3-24-S-51	C-SD3-24-51				
S-DSG-03-∗∗∗-D100-50∗	SD3-100-S-51	C-SD3-100-51	KR3-C-60			
S-DSG-03-∗∗∗-R100-50∗	SR3-100-S-51	C-SR3-100-51	RR3-60			
S-DSG-03-∗∗∗-R200-50∗	SR3-200-S-51	C-SR3-200-51				
S-DSG-03-∗∗∗-RQ100-50∗	SR3-100-51	C-SR3-100-51	QR3-C-60			
DSG-03-∗∗∗-A100-N-50∗	SA3-100-N-51	C-SA3-100-N-51	—	GDM-211-A-11	GDM-211-B-11	Plug-in Connector Type
DSG-03-∗∗∗-A120-N-50∗	SA3-120-N-51	C-SA3-120-N-51				
DSG-03-∗∗∗-A200-N-50∗	SA3-200-N-51	C-SA3-200-N-51				
DSG-03-∗∗∗-A240-N-50∗	SA3-240-N-51	C-SA3-240-N-51				
DSG-03-∗∗∗-D12-N-50∗	SD3-12-N-51	C-SD3-12-N-51				
DSG-03-∗∗∗-D24-N-50∗	SD3-24-N-51	C-SD3-24-N-51				
DSG-03-∗∗∗-D100-N-50∗	SD3-100-N-51	C-SD3-100-N-51				
DSG-03-∗∗∗-R100-N-50∗	SR3-100-N-51	C-SR3-100-N-51		GDME-211-R-A-10	GDME-211-R-B-10	
DSG-03-∗∗∗-R200-N-50∗	SR3-200-N-51	C-SR3-200-N-51				
S-DSG-03-∗∗∗-D12-N-50∗	SD3-12-S-N-51	C-SD3-12-N-51		GDM-211-A-11	GDM-211-B-11	
S-DSG-03-∗∗∗-D24-N-50∗	SD3-24-S-N-51	C-SD3-24-N-51				
S-DSG-03-∗∗∗-D100-N-50∗	SD3-100-S-N-51	C-SD3-100-N-51				
S-DSG-03-∗∗∗-R100-N-50∗	SR3-100-S-N-51	C-SR3-100-N-51		GDME-211-R-A-10	GDME-211-R-B-10	
S-DSG-03-∗∗∗-R200-N-50∗	SR3-200-S-N-51	C-SR3-200-N-51				
DSG-03-∗∗∗-A100-N1-50∗	SA3-100-N-51	C-SA3-100-N-51		GDML-211-1-11	GDML-211-1-11	Plug-in Connector with Indicator Light
DSG-03-∗∗∗-A120-N1-50∗	SA3-120-N-51	C-SA3-120-N-51				
DSG-03-∗∗∗-A200-N1-50∗	SA3-200-N-51	C-SA3-200-N-51				
DSG-03-∗∗∗-A240-N1-50∗	SA3-240-N-51	C-SA3-240-N-51				
DSG-03-∗∗∗-D12-N1-50∗	SD3-12-N-51	C-SD3-12-N-51		GDML-211-2-11	GDML-211-2-11	
DSG-03-∗∗∗-D24-N1-50∗	SD3-24-N-51	C-SD3-24-N-51		GDML-211-3-11	GDML-211-3-11	
DSG-03-∗∗∗-D100-N1-50∗	SD3-100-N-51	C-SD3-100-N-51		GDML-211-1-11	GDML-211-1-11	
S-DSG-03-∗∗∗-D12-N1-50∗	SD3-12-S-N-51	C-SD3-12-N-51		GDML-211-2-11	GDML-211-2-11	
S-DSG-03-∗∗∗-D24-N1-50∗	SD3-24-S-N-51	C-SD3-24-N-51		GDML-211-3-11	GDML-211-3-11	
S-DSG-03-∗∗∗-D100-N1-50∗	SD3-48-S-N-51	C-SD3-100-N-51		GDML-211-1-11	GDML-211-1-11	

Note: The connector assembly is not included in the solenoid assembly.

Low Wattage (5W) Type Solenoid Operated Directional Valves

2 type of Direct Acting type Solenoid Operated Directional Valves, E-DSG-01/03, with suppressed consumption power 5W were launched in series.

E-DSG-01

E-DSG-03

- **Because these valves only 5W of power which enables remarkable reduction of operating cost.**

Standard DSG Series
DSG-01: 29W
DSG-03: 38W

→

Low Wattage Type E-DSG Series
E-DSG-01: 5W
E-DSG-03: 5W

- **Since these valves operate on only 5W, they can be driven through the output circuit of a programmed or sequence controller. This feature simplifies the electric circuitry and enables savings in initial cost.**
- **These low wattage valves minimize coil surface temperature.**
- **CE certified products are available.**

Specifications

Model Numbers	Max. Flow ★ L/min (U.S.GPM)	Max. Operating Pressure MPa (PSI)	Max. T-Line Back Pressure MPa (PSI)	Max. Changeover Frequency Cycle/min {min^{-1}}	Mass kg (1bs.)
E-DSG-01-3C∗-D∗-60	30 (7.9)	16 (2320)	16 (2320)	240	2.2 (4.85)
E-DSG-01-2N2-D∗-60					2.2 (4.85)
E-DSG-01-2D2-D∗-60					2.2 (4.85)
E-DSG-01-2B∗-D∗-60					1.6 (3.53)
E-DSG-03-3C∗-D∗-50	63 (16.6)	16 (2320)	16 (2320)	240	5 (11.03)
E-DSG-01-2D2-D∗-50					5 (11.03)
E-DSG-01-2B2-D∗-50					3.6 (7.94)

★ Maxmum flow indicates a ceiling flow depends on the type of spool and operating condition.

Solenoid Ratings

Model Numbers	Electric source	Coil Type	Voltage (V)		Current & Power at Rated Voltage	
			Source Rating	Serviceable Range	Inrush (A)	Power (W)
E-DSG-01	DC (K Series)	D12	12	10.8 – 13.2	0.43	5
		D24	24	21.6 – 26.4	0.23	
E-DSG-03		D12	12	10.8 – 13.2	0.44	5
		D24	24	21.6 – 26.4	0.22	

The coil type numbers in the shaded column are handled as optional extras. In case these coils are required to be chosen, please confirm the time of delivery with us before ordering .

For details, please contact us.

Electronic Relay Incorporated Solenoid Operated Directional Valves

Drive power source and signal are separate.

The valve is actuated by operating a built-in switch using a very small current signal (about 10 mA) when the solenoid is energised.

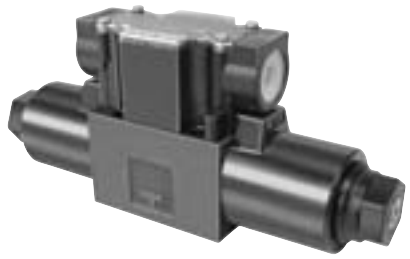

T-DSG-01

T-DSG-03

- **A Direct Drive by a programmable controller is now possible.**
  As the valve can be actuated by a very small current, as we have mentioned, a Direct Drive is possible on the output circuit of the programmable controller or sequence controller.

- **Simple construction and stable operation.**
  Since the valve is a direct type, the construction is quite simple. Also the solenoid is the well proven wet armature type, which can withstand contamination.
  Therefore a stable operation can be obtained.

Specifications

Valve Type	Model Numbers	Max. Flow ★ L/min (U.S.GPM)	Max. Operating Pressure MPa (PSI)	Max. T-Line Back Pressure MPa (PSI)	Max. Changeover Frequency Cycle/min {min⁻¹}	Mass kg (1bs.)
Standard Type	T-DSG-01-3C∗-D24∗-70/7090	100 (26.4)	35 (5080)	21 (3050)	300	1.85 (4.08)
	T-DSG-01-2D2-D24∗-70/7090					
	T-DSG-01-2B∗-D24∗-70/7090					1.4 (3.09)
Shockless Type	T-S-DSG-01-3C∗-D24∗-70/7090	63 (16.6)	25 (3630)	21 (3050)	120	1.85 (4.08)
	T-S-DSG-01-2B2-D24∗-70/7090					1.4 (3.09)
Standard Type	T-DSG-03-3C∗-D24∗-50/5090	120 (31.7)	31.5 (4570) {Spool Type 60 Only 25 (3630)}	16 (2320)	240	5 (11.03)
	T-DSG-03-2D2-D24∗-50/5090					
	T-DSG-03-2B∗-D24∗-50/5090					3.6 (7.94)
Shockless Type	T-S-DSG-03-3C∗-D24∗-50/5090	120 (31.7)	25 (3630)	16 (2320)	120	5 (11.03)
	T-S-DSG-03-2B2-D24∗-50/5090					3.6 (7.94)

★ Maximum flow indicates a ceiling flow. As the ceiling flow depends on the type of spool and operating condition the same as those for standard DSG-01/03, refer to the List of Spool Functions on pages 347 - 351 (DSG-01) and 364 - 368 (DSG-03) for details.

Model Number Designation

F-	T-	S-	DSG	-03	-2	B	2	A	-D24	M	-70	∗	-L
Special Seals	Control Type	Type	Series Number	Valve Size	Number of Valve Position	Spool-Spring Arrangement	Spool Type	Special Two Position Valve	Coil Type	Supply Type of Signal Power	Design Number	Design Standard	Models with Alternate Offset Solenoid
	T: Electronic Relay Incorporated Type			**01**					DC **D24**	**None**: Internal Signal Power	**70**		
				03						**M**: External Signal Power	**50**		

★ Please refer to the valve type DSG-01 and DSG-03 shown on page 346 and 363 for the area shaded.

For details, please contact us.

Comparison of The Conventional Type and The Electronic Relay Incorporated Type

Conventional Type

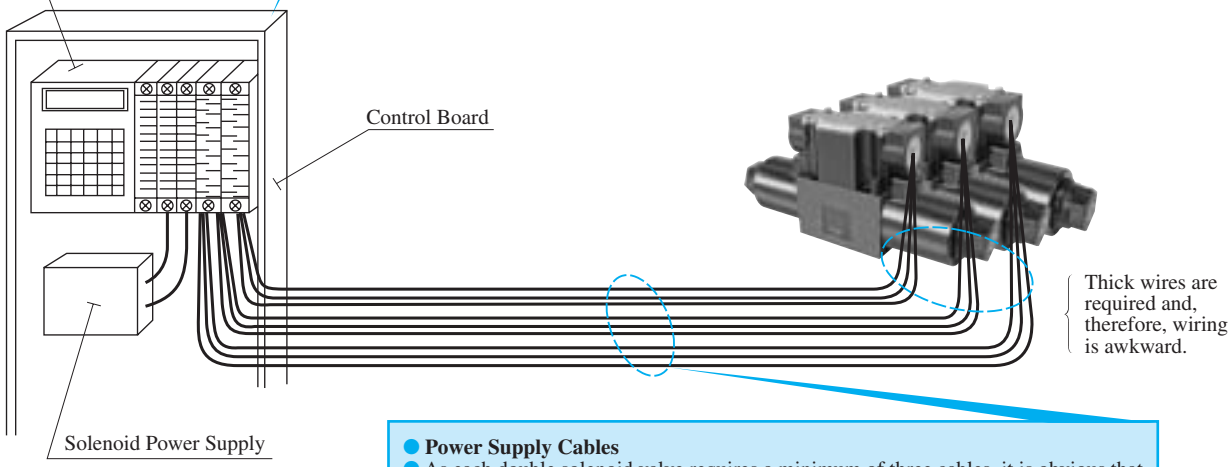

- **Output Unit**
- Large capacity output units (approximately 2A per unit) are required to operate solenoid operated directional valves.
- As there is a limitation for common capacity, all contacts of the output units can be used in some cases.
- Total cost therefore becomes higher, and a larger installation space is required.

- **Power Supply Cables**
- As each double solenoid valve requires a minimum of three cables, it is obvious that the more valves you use, the more power supply cables and wiring is necessitated. This may increase the possibility of miswriting.
- Miswriting and short circuits may damage a very expensive programmable controller and output units.

Electronic Relay Incorporated Type

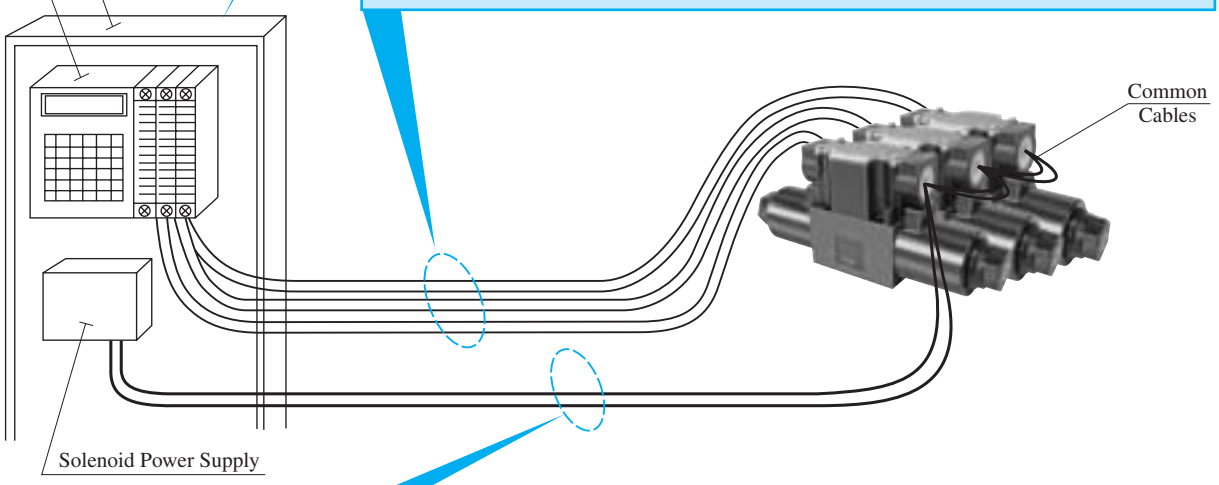

- **Output Unit**
- Standard small capacity output unit, which is usually less expensive can be used.
- Other electric devices can be commonly used with the solenoid directional valves. Therefore, installation as or output units can be reduced.

- **Signal Output Cables**
- Thinner cable, compared with power supply cable, can be used and therefore wiring is easier.
- The solenoid operated directional valve is provided with a protective circuit to ensure a constant current, which protects the programmable controller from serious effects caused by miswriting.

- **Only two power supply cables are required for solenoid operated directional valves and, therefore wiring can be reduced.**

Solenoid Controlled Pilot Operated Directional Valves

These valves are composed of a solenoid operated pilot valve and a pilot operated slave valve. When a solenoid is energised the pilot valve directs the flow to move the spool of the slave valve, thus changing the direction of flow in the hydraulic circuit.

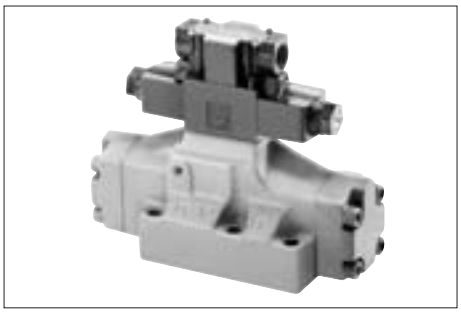

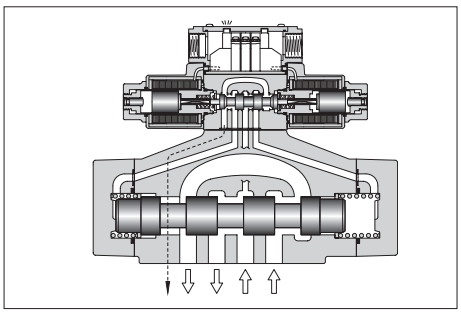

● **High Pressure High Flow**
High pressure [31.5 MPa (4570 PSI)] along which high flow means compact system design.

● **Lower Pressure Drop**
System energy saving increased as pressure drop of each valve has been greatly reduced.

Specifications

Valve Type	Model Numbers	Max. Flow L/min (U.S.GPM) ★1	Max. Operating Pressure MPa (PSI)	Max. Pilot Pressure MPa (PSI)	Min. Required Pilot Pres. MPa (PSI) ★2	Max. T-Line Back Pressure MPa (PSI)		Max. Change-over Frequecy Cycles/Min {min⁻¹}			Mass kg (1bs.)
						Ext. Drain	Int. Drain	AC	DC	R	
Standard Type	DSHG-01-3C∗-∗-14/1480/1490	40 (10.6)	21 (3050)	21 (3050)	1.0 (145)	16 (2320)	16 (2320)	120	120	120	3.2 (7.1)
	DSHG-01-2B∗-∗-14/1480/1490										2.7 (6.0)
	DSHG-03-3C∗-∗-14/1490	160 (42.3)	25 (3630)	25 (3630)	0.7 (100)	16 (2320)	16 (2320)	120	120	120	6.9 (15.2)
	DSHG-03-2N∗-∗-14/1490										6.9 (15.2)
	DSHG-03-2B∗-∗-14/1490										6.4 (14.1)
	(S-)DSHG-04-3C∗-∗-52/5290	300 (79.3)	31.5 (4570)	25 (3630)	0.8 (120)	21 (3050)	16 (2320)	120	120	120	8.5 (18.7)
	(S-)DSHG-04-2N∗-∗-52/5290										8.5 (18.7)
	(S-)DSHG-04-2B∗-∗-52/5290										8.0 (17.6)
Shockless Type	(S-)DSHG-06-3C∗-∗-53/5390	500 (132)	31.5 (4570)	25 (3630)	0.8 (120) ★3	21 (3050)	16 (2320)	120	120	120	12.4 (27.3)
	(S-)DSHG-06-2N∗-∗-53/5390										12.4 (27.3)
	(S-)DSHG-06-2B∗-∗-53/5390										11.9 (26.2)
	(S-)DSHG-06-3H∗-∗-53/5390			21 (3050)	1.0 (145)			110	110	110	13.2 (29.1)
	(S-)DSHG-10-3C∗-∗-43/4390	1100 (291)	31.5 (4570)	25 (3630)	1.0 (145) ★3	21 (3050)	16 (2320)	120	120	100	45.0 (99.2)
	(S-)DSHG-10-2N∗-∗-43/4390							100	100	100	45.0 (99.2)
	(S-)DSHG-10-2B∗-∗-43/4390			21 (3050)				60	60	50	44.5 (98.1)
	(S-)DSHG-10-3H∗-∗-43/4390										52.9 (116.6)

★1. Maximum flow indicates a ceiling flow. As the ceiling flow depends on the type of spool and operating condition, refer to the List of Spool Functions on pages 386 to 390 for details.
★2. Pilot pressure of internal pilot drain models must always exceed tank line back pressure by a minimum required pilot pressure.
★3. Min. pilot pressure of with pilot piston in 1.8 MPa (260 PSI).

Yuken can offer flanged connection valves described below.
Consult us for the details.

Model Numbers	Rated Flow l/min (U.S.GPM)	Max. Pressure MPa (PSI)
DSHF-10-∗∗∗-∗-27∗	315 (83)	21 (3050)
DSHF-16-∗∗∗-∗-37∗	500 (132)	21 (3050)
DSHF-24-∗∗∗-∗-28∗	1200 (317)	21 (3050)
DSHF-32-∗∗∗-∗-27∗	2400 (634)	21 (3050)

Solenoid Ratings

Solenoid ratings of pilot valve are identical with those of standard solenoid valve. Refer to relevant solenoid ratings described on the page below.

Model Numbers	Pilot Valve Model Numbers	Solenoid Ratings described on the page below
DSHG-01	DSG-01-∗∗∗-∗-70∗	345
DSHG-03		
(S-)DSHG-04		
(S-)DSHG-06		
(S-)DSHG-10		

CSA Approved Solenoid Valve

Available to supply DSHG-06 series valve approved by the CSA (Canadian Standards Association).
Consult us for details.

Model Number Designation

F-	S-	DSHG	-06	-2	B	2	A	-C2	-E	T
Special Seals	Type	Series Number	Valve Size	No. of Valve Position	Spool-Spring Arrangement	Spool Type	Special Two Position Valve	Models with Pilot Choke Valve	Pilot Connec-tion	Drain Connec-tion
F: For Phos-phate Ester Type Fluids (Omit if not required)	**None**: Standard Type	**DSHG**: Solenoid Controlled Pilot Operated Directional Valve, Sub-plate Mounting	**01**	**3**	**C**: Spring Centred	**2, 3, 4 40, 5, 60 7, 9, 10 11, 12**	—	—	**None**: Internal Pilot **E**: External Pilot	**None**: External Drain **E**: Internal Drain
				2	**B**: Spring Offset	**2, 3, 4 40, 7**				
			03	**3**	**C**: Spring Centred	**2, 3, 4 40, 5, 60 7, 9, 10 11, 12**	—	**C1**: With C1 Choke **C2**: With C2 Choke **C1C2**: With C1 & C2 Choke (Omit if not required)		
				2	**N**: No-Spring	**2 3 4 40 7**				
					B: Spring Offset					
	None: Standard Type **S**: Shock-less Type		**04**	**3**	**C**: Spring Centred	**2, 4, 40 60, 10, 12 (3, 5, 6 7, 9, 11)** ★1	—			
				2	**N**: No-Spring	**2, 4, 40 (3, 7)** ★1	**A** ★2 (Omit if not required)			
					B: Spring Offset	**2, 4, 40 (3, 7)** ★1	**A**★2 **B**★2 (Omit if not required)			
			06	**3**	**H**: Pressure Centred	**2, 4, 40 60, 10, 12 (3, 5, 6 7, 9, 11)** ★1	—			
					C: Spring Centred					
			10	**2**	**N**: No-Spring	**2, 4, 40 (3, 7)** ★1	**A** ★2 (Omit if not required)			
					B: Spring Offset	**2, 4, 40 (3, 7)** ★1	**A**★2 **B**★2 (Omit if not required)			

Note: In spool type “3”, “5”, “6”, “60”, and “7”, the combination applicable between pilot system and drain system is as described in the table below.

Pilot Connection	Drain Connection	Care in Application
Internal Pilot	External Drain	Hold back pressure in the tank line so that the difference between pilot pressure and drain pressure is always more than minimum required pilot pressure.
	Internal Drain (T)	Combination is not applicable
External Pilot (E)	External Drain Internal Drain (T)	No restrictions in the combination on us

-R2	-A100	-C	-H	-N	-53	-*	-L
Spool Control Modification (Omit if not required) ★3	Coil Type	Manual Override of Pilot Valve	Bult-in Orifice for Pilot Line	Type of Electrical Conduit Connection	Design Number	Design Standard	Models with Reverse Mtg. of Solenoid
—	AC: **A100**, **A200** **A120**, **A240** DC: **D12**, **D24** **D48** AC → DC **R100**, **R200**	**None**: Manual Override Pin	—	**None**: Terminal Box Type	**14**	**None**: Japanese Standard "JIS"	— **L** (Omit if not required)
R2: With Stroke Adjustment, Both Ends **RA**: With Stroke Adjustment, Port "A" End **RB**: With Stroke Adjustment, Port "B" End			—		**14**	**90**: N. American Design Standard	**L** (Omit if not required)
	AC: **A100**, **A200** **A120**, **A240** DC: **D12**, **D24** **D48** AC → DC **R100**, **R200**	**C**: Push Button & Lock Nut	—	**N**: Push-in Connector Type	**52**	**None**: Japanese Standard "JIS" & European Design Standard	— **L** (Omit if not required)
R2: With Stroke Adj., Both Ends **RA**: With Stroke Adj., Port "A" End **RB**: With Stroke Adj., Port "B" End **P2**: With Pilot Piston, Both Ends **PA**: With Pilot Piston, Port "A" End **PB**: With Pilot Piston, Port "B" End			— **H**: Refer to ★5	**N1**: Push-in Connector with Indicator Light ★4	**53**	**80**: European Design Standard (Applicable only for DSHG-01)	—
			—		**43**	**90**: N. American Design Standard	**L** (Omit if not required)

★1. Shekless type (S-DSHG) are not available for spool type marked ( ).
★2. As for the details of the valve using the neutral position and the side position (either SOL a or SOL b side), please refer to page 391.
Furthermore, the spool types other than "2", "4", "40" (3, 7) are also available.
★3. In spool-spring arrangement "H" (Pressure centred models), the valves with stroke adjustment (R*) and pilot-piston (P*) are not available.
★4. NI stands for Plug-in connector with solenoid indicator light. NI is not available for R-type solenoids.
★5. In spool-spring arrangement "H" (pressure centred models), in case the pilot pressure is more than 10 MPa (1450 PSI), please specify that the valve should have the built-in orifice to the pilot line.

In the table above, the symbols and numbers highlighted with shade represent the optional extras. The valves with model number having such optional extras are handles as options, therefore please confirm the time of delivery with us before ordering.

Sub-plates

Valve Model Numbers	Japanese Standard "JIS"			European Design Standard			N. American Design Standard		
	Sub-plate Model Numbers	Thread Size	Approx. Mass kg (1bs.)	Sub-plate Model Numbers	Thread Size	Approx. Mass kg (1bs.)	Sub-plate Model Numbers	Thread Size	Approx. Mass kg (1bs.)
DSHG-01	DSGM-01-31	Rc 1/8	0.8 (1.8)	DSGM-01-3080	1/8 BSP.F	0.8 (1.8)	DSGM-01-3090	1/8 NPT	0.8 (1.8)
	DSGM-01X-31	Rc 1/4	0.8 (1.8)	DSGM-01X-3080	1/4 BSP.F	0.8 (1.8)	DSGM-01X-3090	1/4 NPT	0.8 (1.8)
	DSGM-01Y-31	Rc 3/8	0.8 (1.8)	—	—	—	DSGM-01Y-3090	3/8 NPT	0.8 (1.8)
DSHG-03	DSGM-03-40★	Rc 3/8	3.0 (6.6)	DSGM-03-2180★	3/8 BSP.F	3.0 (6.6)	DSGM-03-2190★	3/8 NPT	3.0 (6.6)
	DSGM-03X-40★	Rc 1/2	3.0 (6.6)	DSGM-03X-2180★	1/2 BSP.F	3.0 (6.6)	DSGM-03X-2190★	1/2 NPT	3.0 (6.6)
	DSGM-03Y-40★	Rc 3/4	4.7 (10.4)	DSGM-03Y-2180★	3/4 BSP.F	4.7 (10.4)	DSGM-03Y-2190★	3/4 NPT	4.7 (10.4)
	DHGM-03Y-10	Rc 3/4	4.7 (10.4)	DHGM-03Y-1080	3/4 BSP.F	4.7 (10.4)	DHGM-03Y-1090	3/4 NPT	4.7 (10.4)
DSHG-04	DHGM-04-20	Rc 1/2	4.4 (9.7)	DHGM-04-2080	1/2 BSP.F	4.4 (9.7)	DHGM-04-2090	1/2 NPT	4.4 (9.7)
	DHGM-04X-20	Rc 3/4	4.1 (9.0)	DHGM-04X-2080	3/4 BSP.F	4.1 (9.0)	DHGM-04X-2090	3/4 NPT	4.1 (9.0)
DSHG-06	DHGM-06-50	Rc 3/4	7.4 (16.3)	DHGM-06-5080	3/4 BSP.F	8.5 (18.7)	DHGM-06-5090	3/4 NPT	7.4 (16.3)
	DHGM-06X-50	Rc 1	7.4 (16.3)	DHGM-06X-5080	1 BSP.F	8.5 (18.7)	DHGM-06X-5090	1 NPT	7.4 (16.3)
DSHG-10	DHGM-10-40	Rc 1-1/4	21.5 (47.4)	DHGM-10-4080	1-1/4 BSP.F	21.5 (47.4)	DHGM-10-4090	1-1/4 NPT	21.5 (47.4)
	DHGM-10X-40	Rc 1-1/2	21.5 (47.4)	DHGM-10X-4080	1-1/2 BSP.F	21.5 (47.4)	DHGM-10X-4090	1-1/2 NPT	21.5 (47.4)

★ DSGM-03∗ is available only for Internal pilot-Internal drain type (Use DHGM-03Y for other valves).

● Sub-plates are available. Specify the sub-plate model number from the table above.
When sub-plates are not used, the mounting surface should have a good machined finish.

Mounting Bolt

Model Numbers	Mouting Bolt				
	Name	Japanese Standard "JIS" European Design Standard	N. American Design Standard	Qty.	Tightening Torque Nm (in. 1bs.)
DSHG-01	Mtg. Bolt Kit ★3	MBK-01-01-30 ★1 MBK-01-02-30 ★2	MBK-01-01-3090 ★1 MBK-01-02-3090 ★2	1 set	5 - 6 (43 - 52)
DSHG-03	Soc. Hd. Cap Screw	M6 × 35 Lg.	1/4-20 UNC × 1-3/4 Lg.	4	12 - 15 (104 - 130)
(S-)DSHG-04	Soc. Hd. Cap Screw	M6 × 45 Lg. M10 × 50 Lg.	1/4-20 UNC × 1-3/4 Lg. 3/8-16 UNC × 2 Lg.	2 4	12 - 15 (104 - 130) 58 - 72 (504 - 625)
(S)-DSHG-06	Soc. Hd. Cap Screw	M12 × 60 Lg.	1/2-13 UNC × 2-1/2 Lg.	6	100 - 123 (868 - 1068)
(S)-DSHG-10	Soc. Hd. Cap Screw	M20 × 75 Lg.	3/4-10 UNC × 3 Lg.	6	473 - 585 (4106 - 5078)

★1. For Internal Pilot-Internal Drain.
★2. For External Pilot or External Drain.
★3. Mounting bolt kit is common to that of 01 series modular valves.
Refer to figure below for the dimensions of bolt kit.

● **Stud Bolt**

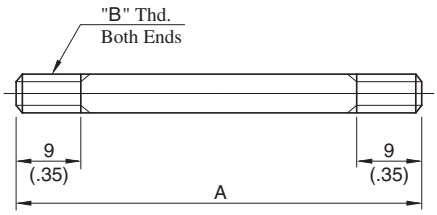

● **Nut**

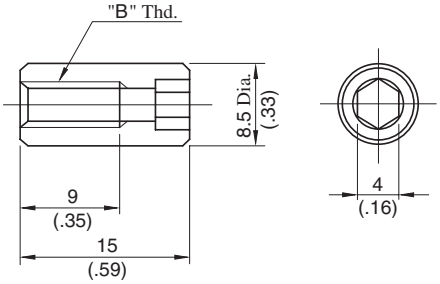

DIMENSIONS IN MILLIMETRES (INCHES)

Model Numbers	A mm (In.)	"B" Thd.
MBK-01-01-30	94 (3.70)	M5
MBK-01-02-30	134 (5.28)	
MBK-01-01-3090	94 (3.70)	No.10-24 UNC
MBK-01-02-3090	134 (5.28)	

Options

Models with Pilot Choke Adjustment

When the adjustment screw is turned clockwise, changeover speed of the main spool becomes slow. In case of the spring centred valves in particular, making slow of the returning speed of the main spool to the neutral position is possible with a C2 choke valve. These choke valves can be used in combination with the valves of spring centred, no-spring, offset, pressure centred and the valves with stroke adjustment.

Graphic Symbols (Ex.: Spring Centred)

- DSHG-01,06,10

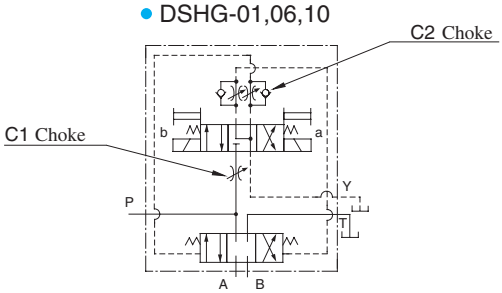

- DSHG-03, 04

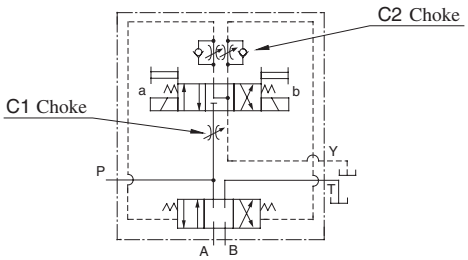

Models with Pilot Piston(P2, PA, PB)

The valves with a pilot piston can be used when the high speed changeover of the main spool is required. However, please not that in case of spring centered valves, there is no change in the returning speed of the main spool to the neutral position even with the pilot piston.

Graphic Symbols (Ex.: Spring Centred)

- "P2" Models

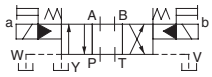

- "PA" Models

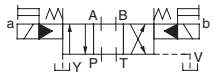

- "PB" Models

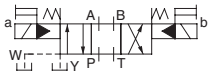

Pressure Centred Models (3H∗)

The pressure centered type can be used when the returning of the main spool to the neutral position is required to be firmly.

Graphic Symbols (Ex.: External Pilot-External Drain)

(Only for 3H6, 3H60)

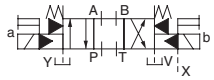

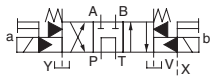

Models with Stroke Adjustment (R2, RA, RB)

When the adjustment screw is screwed in , the main spool stroke becomes short and flow rate reduces.

Graphic Symbols (Ex.: Spring Centred)

- "R2" Models

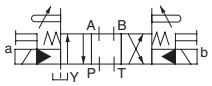

- "RA" Models

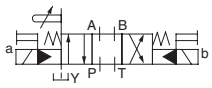

- "RB" Models

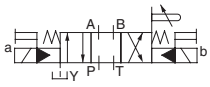

Additional Mass of Options

Add the mass described below to the mass of standard models on page 381, if options are required.

kg (1bs.)

Model Numbers	Model with Pilot Choke Adj.		Models with Pilot Piston		Models with Stroke Adj.	
	C1, C2	C1C2	P2	PA PB	P2	PA PB
DSHG-03	0.65(1.4)	1.3(2.9)	—	—	0.6(1.3)	0.3 (.7)
(S-)DSHG-04	0.65(1.4)	1.3(2.9)	—	—	1.0(2.2)	0.5(1.1)
(S-)DSHG-06	0.65(1.4)	1.3(2.9)	1.0(2.2)	0.5(1.1)	1.2(2.6)	06(1.3)
(S-)DSHG-10	0.65(1.4)	1.3(2.9)	3.6(7.9)	1.8(4.0)	3.7(8.2)	1.85(4.1)

Options on Pilot Valve

The same options to DSG-01 series valves are available. Please refer to page 345 for the details.

List of Spool Functions and Maxmum Flow (DSHG-01)

Spool Type	Three Positions				Two Positions			
	Spring Centred				Spring Centred			
	Graphic Symbol 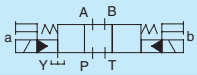	Maximum Flow L/min (U.S.GPM)			Graphic Symbol 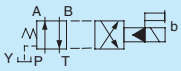	Maximum Flow L/min (U.S.GPM)		
	Model Numbers	7 MPa (1020 PSI)	14 MPa (2030 PSI)	21 MPa (3050 PSI)	Model Numbers	7 MPa (1020 PSI)	14 MPa (2030 PSI)	21 MPa (3050 PSI)
"2"	DSHG-01-3C2	40 (10.6)	40 (10.6)	40 (10.6)	DSHG-01-2B2	40 (10.6)	40 (10.6)	40 (10.6)
"3"	DSHG-01-3C3	40 (10.6)	40 (10.6)	40 (10.6)	DSHG-01-2B3	40 (10.6)	40 (10.6)	40 (10.6)
"4"	DSHG-01-3C4	40 (10.6)	40 (10.6)	40 (10.6)	DSHG-01-2B4	40 (10.6)	40 (10.6)	40 (10.6)
"40"	DSHG-01-3C40	40 (10.6)	40 (10.6)	40 (10.6)	DSHG-01-2B40	40 (10.6)	40 (10.6)	40 (10.6)
"5"	DSHG-01-3C5	40 (10.6)	40 (10.6)	40 (10.6)				
"60" 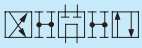	DSHG-01-3C60	40 (10.6)	40 (10.6)	40 (10.6)				
"7"	DSHG-01-3C7	40 (10.6)	40 (10.6)	40 (10.6)	DSHG-01-2B7	40 (10.6)	40 (10.6)	40 (10.6)
"9"	DSHG-01-3C9	40 (10.6)	40 (10.6)	40 (10.6)				
"10"	DSHG-01-3C10	40 (10.6)	40 (10.6)	40 (10.6)				
"11"	DSHG-01-3C11	40 (10.6)	40 (10.6)	40 (10.6)				
"12"	DSHG-01-3C12	40 (10.6)	40 (10.6)	40 (10.6)				

Notes) 1. Max. flow shows value at pilot pressure more than 1 MPa (150 PSI)

2. Max. flow in the table above represents the value in the flow condition of P→ A → B → T (or P → B → A → T) as shown in the circuit diagram right.
In case the valve is used in the condition that either A or B port is blocked, the maximum flow differs according to a hydraulic circuit, therefore, please consult us for details.

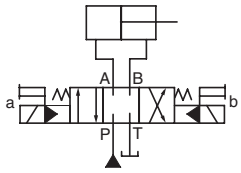

List of Spool Functions and Maxmum Flow (DSHG-03)

Three Positions

Spool Type	Spring Centred			
	Graphic Symbol 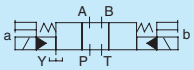	Maximum Flow L/min (U.S.GPM)		
	Model Numbers	7 MPa (1020 PSI)	14 MPa (2030 PSI)	25 MPa (3630 PSI)
"2"	DSHG-03-3C2	160 (42.3)	85 (22.5) 160 (42.3)	60 (15.9) 95 (25.1)
"3"	DSHG-03-3C3	160 (42.3)	160 (42.3)	160 (42.3)
"4"	DSHG-03-3C4	160 (42.3)	85 (22.5) 160 (42.3)	60 (15.9) 95 (25.1)
"40"	DSHG-03-3C40	160 (42.3)	85 (22.5) 160 (42.3)	60 (15.9) 95 (25.1)
"5"	DSHG-03-3C5	160 (42.3)	85 (22.5) 160 (42.3)	60 (15.9) 95 (25.1)
"60"	DSHG-03-3C60	160 (42.3)	160 (42.3)	125 (33.0) 160 (42.3)
"7"	DSHG-03-3C7	160 (42.3)	85 (22.5) 160 (42.3)	60 (15.9) 95 (25.1)
"9"	DSHG-03-3C9	160 (42.3)	85 (22.5) 160 (42.3)	60 (15.9) 95 (25.1)
"10"	DSHG-03-3C10	160 (42.3)	85 (22.5) 160 (42.3)	60 (15.9) 95 (25.1)
"11"	DSHG-03-3C11	160 (42.3)	85 (22.5) 160 (42.3)	60 (15.9) 95 (25.1)
"12"	DSHG-03-3C12	160 (42.3)	85 (22.5) 160 (42.3)	60 (15.9) 95 (25.1)

Two Positions

Spool Type	No-Spring				Spring Offset			
	Graphic Symbol 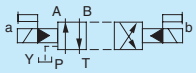	Maximum Flow L/min (U.S.GPM)			Graphic Symbol 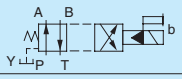	Maximum Flow L/min (U.S.GPM)		
	Model Numbers	7 MPa (1020 PSI)	14 MPa (2030 PSI)	25 MPa (3630 PSI)	Model Numbers	7 MPa (1020 PSI)	14 MPa (2030 PSI)	25 MPa (3630 PSI)
"2"	DSHG-03-2N2	160 (42.3)	160 (42.3)	85 (22.5) 160 (42.3)	DSHG-03-2B2	160 (42.3)	160 (42.3)	85 (22.5) 160 (42.3)
"3"	DSHG-03-2N3	160 (42.3)	160 (42.3)	85 (22.5) 160 (42.3)	DSHG-03-2B3	160 (42.3)	160 (42.3)	85 (22.5) 160 (42.3)
"4"	DSHG-03-2N4	160 (42.3)	160 (42.3)	85 (22.5) 160 (42.3)	DSHG-03-2B4	160 (42.3)	160 (42.3)	85 (22.5) 160 (42.3)
"40"	DSHG-03-2N40	160 (42.3)	160 (42.3)	85 (22.5) 160 (42.3)	DSHG-03-2B40	160 (42.3)	160 (42.3)	85 (22.5) 160 (42.3)
"7"	DSHG-03-2N7	160 (42.3)	160 (42.3)	85 (22.5) 160 (42.3)	DSHG-03-2B7	160 (42.3)	160 (42.3)	85 (22.5) 160 (42.3)

Notes: 1. The relation between max. flow and pilot pressure in the table above is as shown below.

(Example)

Maximum flow rate is constant regardless of pilot pressure.
Pilot Pressure more than 0.7 MPa (100 PSI).

160 (42.3)	85 (22.5)
	160 (42.3)

Pilot Pressure at 0.7 MPa (100 PSI).

Pilot Pressure at 1 MPa (150 PSI).

2. Max. flow in the table above represents the value in the flow condition of P → A → B → T (or P → B → A → T) as shown in the circuit diagram right.
In case the valve is used in the condition that either A or B port is blocked, the maximum flow differs according to a hydraulic circuit, therefore, please consult us for details.

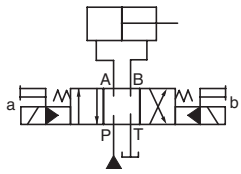

List of Spool Functions and Maxmum Flow (DSHG-04/S-DSHG-04)

Three Positions

Spool Type	Spring Centred				
	Graphic Symbol 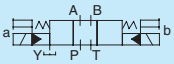	Maximum Flow L/min (U.S.GPM)			
	Model Numbers	10 MPa (1450 PSI)	16 MPa (2320 PSI)	25 MPa (3630 PSI)	31.5 MPa (4570 PSI)
"2"	DSHG-04-3C2	300 (79.3)	300 (79.3)	200 (52.8)	145 (38.3)
	(S-)DSHG-04-3C2	300 (79.3)	250 (66.1)	120 (31.7)	110 (29.1)
"3"	DSHG-04-3C3	300 (79.3)	300 (79.3)	300 (79.3)	300 (79.3)
"4"	DSHG-04-3C4	300 (79.3)	300 (79.3)	250 (66.1)	165 (43.6)
	(S-)DSHG-04-3C4	300 (79.3)	300 (79.3)	140 (37.0)	110 (29.1)
"40"	DSHG-04-3C40	300 (79.3)	300 (79.3)	200 (52.8)	145 (38.3)
	(S-)DSHG-04-3C40	300 (79.3)	250 (66.1)	120 (31.7)	110 (29.1)
"5"	DSHG-04-3C5	250 (66.1)	250 (66.1)	245 (64.7)	245 (64.7)
"6"	DSHG-04-3C6	300 (79.3)	260 (68.7)	245 (64.7)	235 (62.1)
"60"	DSHG-04-3C60	300 (79.3)	300 (79.3)	300 (79.3)	300 (79.3)
	(S-)DSHG-04-3C60				
"7"	DSHG-04-3C7	300 (79.3)	300 (79.3)	200 (52.8)	145 (38.3)
"9"	DSHG-04-3C9	300 (79.3)	300 (79.3)	280 (74.0)	250 (66.1)
"10"	DSHG-04-3C10	300 (79.3)	300 (79.3)	200 (52.8)	150 (39.6)
	(S-)DSHG-04-3C10	300 (79.3)	250 (66.1)	120 (31.7)	110 (29.1)
"11"	DSHG-04-3C11	300 (79.3)	260 (68.7)	160 (42.3)	140 (37.0)
"12"	DSHG-04-3C12	300 (79.3)	280 (74.0)	170 (44.9)	135 (35.7)
	(S-)DSHG-04-3C12	300 (79.3)	250 (66.1)	120 (31.7)	110 (29.1)

Two Positions

Spool Type	No-Spring					Spring Offset				
	Graphic Symbol 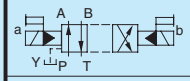	Maximum Flow L/min (U.S.GPM)				Graphic Symbol 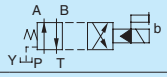	Maximum Flow L/min (U.S.GPM)			
	Model Numbers	10 MPa (1450 PSI)	16 MPa (2320 PSI)	25 MPa (3630 PSI)	31.5 MPa (4570 PSI)	Model Numbers	10 MPa (1450 PSI)	16 MPa (2320 PSI)	25 MPa (3630 PSI)	31.5 MPa (4570 PSI)
"2"	(S-)DSHG-04-2N2	300 (79.3)	300 (79.3)	300 (79.3)	300 (79.3)	(S-)DSHG-04-2B2	300 (79.3)	300 (79.3)	300 (79.3)	300 (79.3)
"3"	DSHG-04-2N3	300 (79.3)	300 (79.3)	300 (79.3)	300 (79.3)	DSHG-04-2B3	300 (79.3)	300 (79.3)	300 (79.3)	300 (79.3)
"4"	(S-)DSHG-04-2N4	300 (79.3)	300 (79.3)	300 (79.3)	300 (79.3)	(S-)DSHG-04-2B4	300 (79.3)	300 (79.3)	300 (79.3)	300 (79.3)
"40"	(S-)DSHG-04-2N40	300 (79.3)	300 (79.3)	300 (79.3)	300 (79.3)	(S-)DSHG-04-2B40	300 (79.3)	300 (79.3)	300 (79.3)	300 (79.3)
"7"	DSHG-04-2N7	300 (79.3)	300 (79.3)	300 (79.3)	300 (79.3)	DSHG-04-2B7	300 (79.3)	300 (79.3)	300 (79.3)	300 (79.3)

Notes: 1. Max flow described above shown value at pilot pressure more than 0.8 MPa (120 PSI).

2. Max. flow in the table above represents the value in the flow condition of P→ A → B → T (or P → B → A → T) as shown in the circuit diagram right.
In case the valve is used in the condition that either A or B port is blocked, the maximum flow differs according to a hydraulic circuit, therefore, please consult us for details.

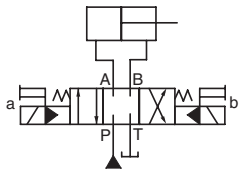

List of Spool Functions and Maxmum Flow (DSHG-06/S-DSHG-06)

Three Positions

Spool Type	Spring Centred					Pressure Centred				
	Graphic Symbol	Maximum Flow L/min (U.S.GPM)				Graphic Symbol	Maximum Flow L/min (U.S.GPM)			
	Model Numbers	10 MPa (1450 PSI)	16 MPa (2320 PSI)	25 MPa (3630 PSI)	31.5 MPa (4570 PSI)	Model Numbers	10 MPa (1450 PSI)	16 MPa (2320 PSI)	25 MPa (3630 PSI)	31.5 MPa (4570 PSI)
"2"	(S-)DSHG-06-3C2	500 (132)	500 (132)	410 (108) 500 (132)	310 (81.9) 500 (132)	(S-)DSHG-06-3H2	500 (132)	500 (132)	500 (132)	420 (111) 500 (132)
"3"	DSHG-06-3C3	500 (132)	500 (132)	460 (122)	370 (97.8)	DSHG-06-3H3	500 (132)	500 (132)	500 (132)	500 (132)
"4"	(S-)DSHG-06-3C4	500 (132)	500 (132)	410 (108) 500 (132)	310 (81.9) 500 (132)	(S-)DSHG-06-3H4	500 (132)	500 (132)	500 (132)	420 (111) 500 (132)
"40"	(S-)DSHG-06-3C40	500 (132)	500 (132)	410 (108) 500 (132)	310 (81.9) 500 (132)	(S-)DSHG-06-3H40	500 (132)	500 (132)	500 (132)	420 (111) 500 (132)
"5"	DSHG-06-3C5	500 (132)	500 (132)	425 (112)	350 (92.5)	DSHG-06-3H5	500 (132)	500 (132)	500 (132)	470 (124) 500 (132)
"6"	DSHG-06-3C6	475 (125)	390 (103)	300 (79.3)	230 (60.8)	DSHG-06-3H6	500 (132)	500 (132)	500 (132)	420 (111) 500 (132)
"60"	(S-)DSHG-06-3C60	475 (125)	420 (111)	340 (89.8)	280 (74.0)	(S-)DSHG-06-3H60	500 (132)	500 (132)	500 (132)	420 (111) 500 (132)
"7"	DSHG-06-3C7	500 (132)	500 (132)	450 (119)	360 (95.1)	DSHG-06-3H7	500 (132)	500 (132)	500 (132)	500 (132)
"9"	DSHG-06-3C9	500 (132)	500 (132)	450 (119) 500 (132)	360 (95.1) 500 (132)	DSHG-06-3H9	500 (132)	500 (132)	500 (132)	500 (132)
"10"	(S-)DSHG-06-3C10	500 (132)	500 (132)	410 (108) 500 (132)	310 (81.9) 500 (132)	(S-)DSHG-06-3H10	500 (132)	500 (132)	500 (132)	460 (122) 500 (132)
"11"	DSHG-06-3C11	500 (132)	500 (132)	410 (108) 500 (132)	310 (81.9) 500 (132)	DSHG-06-3H11	500 (132)	500 (132)	500 (132)	460 (122) 500 (132)
"12"	(S-)DSHG-06-3C12	500 (132)	500 (132)	410 (108) 500 (132)	310 (81.9) 500 (132)	(S-)DSHG-06-3H12	500 (132)	500 (132)	500 (132)	460 (122) 500 (132)

Two Positions

Spool Type	No-Spring					Spring Offset				
	Graphic Symbol	Maximum Flow L/min (U.S.GPM)				Graphic Symbol	Maximum Flow L/min (U.S.GPM)			
	Model Numbers	10 MPa (1450 PSI)	16 MPa (2320 PSI)	25 MPa (3630 PSI)	31.5 MPa (4570 PSI)	Model Numbers	10 MPa (1450 PSI)	16 MPa (2320 PSI)	25 MPa (3630 PSI)	31.5 MPa (4570 PSI)
"2"	(S-)DSHG-06-2N2	500 (132)	500 (132)	500 (132)	500 (132)	(S-)DSHG-06-2B2	500 (132)	500 (132)	500 (132)	500 (132)
"3"	DSHG-06-2N3	500 (132)	500 (132)	500 (132)	500 (132)	DSHG-06-2B3	500 (132)	500 (132)	500 (132)	500 (132)
"4"	(S-)DSHG-06-2N4	500 (132)	500 (132)	500 (132)	500 (132)	(S-)DSHG-06-2B4	500 (132)	500 (132)	500 (132)	500 (132)
"40"	(S-)DSHG-06-2N40	500 (132)	500 (132)	500 (132)	500 (132)	(S-)DSHG-06-2B40	500 (132)	500 (132)	500 (132)	500 (132)
"7"	DSHG-06-2N7	500 (132)	500 (132)	500 (132)	500 (132)	DSHG-06-2B7	500 (132)	500 (132)	500 (132)	500 (132)

Notes:1. The relation between max. flow and pilot pressure in the table above is as shown below.

(Example)

Maximum flow rate is constant regardless of pilot pressure.
Pilot Pressure more than 0.8 MPa (120 PSI).
In case pressure centred models, pilot pressure is more than 1 MPa (150 PSI).

500 (132)	410 (108)
	500 (132)

Pilot Pressure at 0.8 MPa (120 PSI).
In case pressure centred models, pilot pressure is more than 1 MPa (150 PSI)

Pilot Pressure at 1.5 MPa (220 PSI).

2. Max. flow in the table above represents the value in the flow condition of P→ A → B → T (or P → B → A → T) as shown in the circuit diagram right.
In case the valve is used in the condition that either A or B port is blocked, the maximum flow differs according to a hydraulic circuit, therefore, please consult us for details.

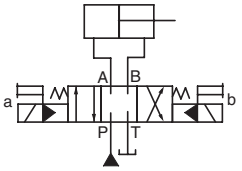

List of Spool Functions and Maxmum Flow (DSHG-010/S-DSHG-10)

Three Positions

Spool Type	Spring Centred					Pressure Centred				
	Graphic Symbol	Maximum Flow L/min (U.S.GPM)				Graphic Symbol	Maximum Flow L/min (U.S.GPM)			
	Model Numbers	10 MPa (1450 PSI)	16 MPa (2320 PSI)	25 MPa (3630 PSI)	31.5 MPa (4570 PSI)	Model Numbers	10 MPa (1450 PSI)	16 MPa (2320 PSI)	25 MPa (3630 PSI)	31.5 MPa (4570 PSI)
"2"	(S-)DSHG-10-3C2	1100(291)	1100(291)	950(251) 1100(291)	750(198) 1100(291)	(S-)DSHG-10-3H2	1100(291)	1100(291)	1100(291)	970(256) 1100(291)
"3"	DSHG-10-3C3	1100(291)	1100(291)	1060(280)	895(236)	DSHG-10-3H3	1100(291)	1100(291)	1100(291)	1050(277) 1100(291)
"4"	(S-)DSHG-10-3C4	1100(291)	1100(291)	950(251) 1100(291)	750(198) 1100(291)	(S-)DSHG-10-3H4	1100(291)	1100(291)	1100(291)	970(256) 1100(291)
"40"	(S-)DSHG-10-3C40	1100(291)	1100(291)	950(251) 1100(291)	750(198) 1100(291)	(S-)DSHG-10-3H40	1100(291)	1100(291)	1100(291)	970(256) 1100(291)
"5"	DSHG-10-3C5	1100(291)	1100(291)	980(259)	850(225)	DSHG-10-3H5	1100(291)	1100(291)	1100(291)	1000(264) 1100(291)
"6"	DSHG-10-3C6	1050(277)	880(232)	700(185)	570(151)	DSHG-10-3H6	1100(291)	1100(291)	1100(291)	970(256) 1100(291)
"60"	(S-)DSHG-10-3C60	1050(277)	940(248)	785(207)	680(180)	(S-)DSHG-10-3H60	1100(291)	1100(291)	1100(291)	970(256) 1100(291)
"7"	DSHG-10-3C7	1100(291)	1100(291)	1040(275) 1100(291)	870(230) 1100(291)	DSHG-10-3H7	1100(291)	1100(291)	1100(291)	1100(291)
"9"	DSHG-10-3C9	1100(291)	1100(291)	1040(275)	870(230)	DSHG-10-3H9	1100(291)	1100(291)	1100(291)	1100(291)
"10"	(S-)DSHG-10-3C10	1100(291)	1100(291)	950(251) 1100(291)	750(198) 1100(291)	(S-)DSHG-10-3H10	1100(291)	1100(291)	1100(291)	1060(280) 1100(291)
"11"	DSHG-10-3C11	1100(291)	1100(291)	950(251) 1100(291)	750(198) 1100(291)	DSHG-10-3H11	1100(291)	1100(291)	1100(291)	1060(280) 1100(291)
"12"	(S-)DSHG-10-3C12	1100(291)	1100(291)	950(251) 1100(291)	750(198) 1100(291)	(S-)DSHG-10-3H12	1100(291)	1100(291)	1100(291)	1060(280) 1100(291)

Two Positions

Spool Type	No-Spring					Spring Offset				
	Graphic Symbol	Maximum Flow L/min (U.S.GPM)				Graphic Symbol	Maximum Flow L/min (U.S.GPM)			
	Model Numbers	10 MPa (1450 PSI)	16 MPa (2320 PSI)	25 MPa (3630 PSI)	31.5 MPa (4570 PSI)	Model Numbers	10 MPa (1450 PSI)	16 MPa (2320 PSI)	25 MPa (3630 PSI)	31.5 MPa (4570 PSI)
"2"	(S-)DSHG-10-2N2	1100(291)	1100(291)	1100(291)	1100(291)	(S-)DSHG-10-2B2	1100(291)	1100(291)	1100(291)	1100(291)
"3"	DSHG-10-2N3	1100(291)	1100(291)	1100(291)	1100(291)	DSHG-10-2B3	1100(291)	1100(291)	1100(291)	1100(291)
"4"	(S-)DSHG-10-2N4	1100(291)	1100(291)	1100(291)	1100(291)	(S-)DSHG-10-2B4	1100(291)	1100(291)	1100(291)	1100(291)
"40"	(S-)DSHG-10-2N40	1100(291)	1100(291)	1100(291)	1100(291)	(S-)DSHG-10-2B40	1100(291)	1100(291)	1100(291)	1100(291)
"7"	DSHG-10-2N7	1100(291)	1100(291)	1100(291)	1100(291)	DSHG-10-2B7	1100(291)	1100(291)	1100(291)	1100(291)

Notes) 1. The relation between max. flow and pilot pressure in the table above is as shown below.

(Example)

Maximum flow rate is constant regardless of pilot pressure.
Pilot Pressure more than 1 MPa (150 PSI).

1100 (291)	1040 (275)
	1100 (291)

Pilot Pressure at 1 MPa (150 PSI).

Pilot Pressure at 1.5 MPa (220 PSI).

2. Max. flow in the table above represents the value in the flow condition of P → A → B → T (or P → B → A → T) as shown in the circuit diagram right.
In case the valve is used in the condition that either A or B port is blocked, the maximum flow differs according to a hydraulic circuit, therefore, please consult us for details.

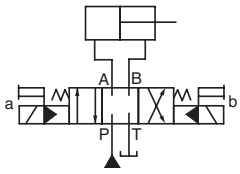

Reverse Mounting of Solenoid.

In spring offset type, it is a standard configuration that the solenoid is mounted onto the valve in the SOL b position (side). However, in this particular spool-spring arrangement, the mounting of the solenoid onto the valve in the reverse position - SOL a side - is also available. The graphic symbol for this reverse mounting is as shown below. As for the valve type 2B∗A and 2B∗B, please refer to the explanation under the heading of "Valves Using Neutral Position and Side Position" given below.

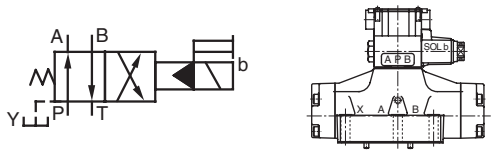

Standard Mtg. of Solenoid

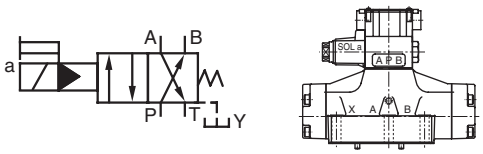

Reverse Mtg. of Solenoid ("L")

Valves Using Neutral Position and Side Position. (Special Two position Valve)

Besides the use of the standard 2-position valves aforementioned in the "List of Standard Models and Maximum Flow", the 3-position valves also can be used as the 2-position valves using the two of their three positions. In this case, there are two kinds of the valve available. One is the valve using the neutral position and SOL a position (2B∗A) and another is the valve using the neutral position and SOL b position (2B∗B).

(Example) In case of Spool Type "2"

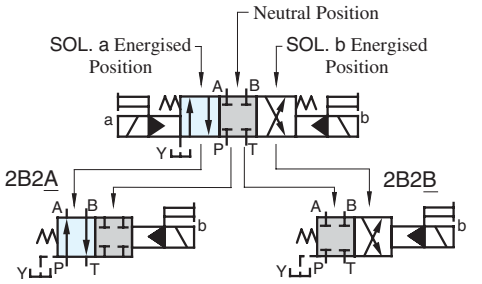

"A": Use of Neutral and SOL. a Energised Position

"B": Use of Neutral and SOL. b Energised Position

Model Numbers	Graphic Symbols	
	Standard Mtg.	Reverse Mtg. Type
04 DSHG-06-2B∗A 10		
(S-)DSHG-∗-2B2A		
DSHG-∗-2B3A		
(S-)DSHG-∗-2B4A		
(S-)DSHG-∗-2B40A		
DSHG-∗-2B5A		
DSHG-∗-2B6A		
(S-)DSHG-∗-2B60A		
DSHG-∗-2B7A		
DSHG-∗-2B9A		
(S-)DSHG-∗-2B10A		
DSHG-∗-2B11A		
(S-)DSHG-∗-2B12A		

Model Numbers	Graphic Symbols	
	Standard Mtg.	Reverse Mtg. Type
04 DSHG-06-2B∗B 10		
(S-)DSHG-∗-2B2B		
DSHG-∗-2B3B		
(S-)DSHG-∗-2B4B		
(S-)DSHG-∗-2B40B		
DSHG-∗-2B5B		
DSHG-∗-2B6B		
(S-)DSHG-∗-2B60B		
DSHG-∗-2B7B		
DSHG-∗-2B9B		
(S-)DSHG-∗-2B10B		
DSHG-∗-2B11B		
(S-)DSHG-∗-2B12B		

Model Numbers	Graphic Symbols
	Standard Mtg.
04 DSHG-06-2N∗A 10	
(S-)DSHG-∗-2N2A	
DSHG-∗-2N3A	
(S-)DSHG-∗-2N4A	
(S-)DSHG-∗-2N40A	
DSHG-∗-2N5A	
DSHG-∗-2N6A	
(S-)DSHG-∗-2N60A	
DSHG-∗-2N7A	
DSHG-∗-2N9A	
(S-)DSHG-∗-2N10A	
DSHG-∗-2N11A	
(S-)DSHG-∗-2N12A	

Pressure Drop

Pressure drop curves based on viscosity of 35 mm^2/s (164 SSU) and specific gravity of 0.850.

DSHG-01

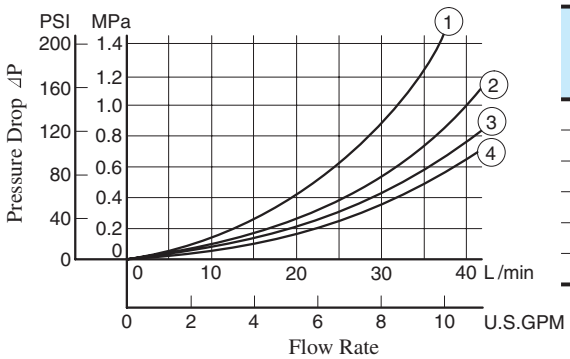

DSHG-01

Spool Type	Pressure Drop Curve Numbers					Spool Type	Pressure Drop Curve Numbers				
	P→A	B→T	P→B	A→T	P→T		P→A	B→T	P→B	A→T	P→T
2	③	②	③	②	—	7	③	②	③	②	—
3	④	②	④	②	②	9	④	②	④	②	—
4	③	②	③	②	—	10	③	②	③	②	—
40	③	②	③	②	—	11	③	②	③	②	—
5	③	②	③	②	①	12	③	②	③	②	—
60	③	②	③	②	①						

DSHG-03

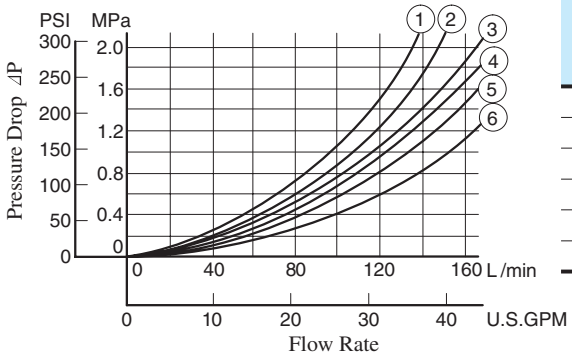

DSHG-03

Spool Type	Pressure Drop Curve Numbers					Spool Type	Pressure Drop Curve Numbers				
	P→A	B→T	P→B	A→T	P→T		P→A	B→T	P→B	A→T	P→T
2	③	③	④	④	—	7	③	③	④	④	—
3	⑤	⑤	⑤	⑥	④	9	⑥	③	⑥	④	—
4	③	⑤	④	⑥	—	10	③	⑤	④	④	—
40	③	③	④	④	—	11	⑥	③	④	④	—
5	⑥	③	④	⑥	②	12	③	③	④	⑥	—
60	③	③	④	④	①						

DSHG-04, S-DSHG-04

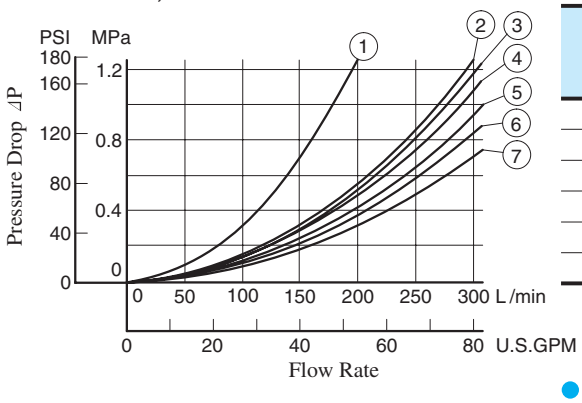

DSHG-04

Spool Type	Pressure Drop Curve Numbers					Spool Type	Pressure Drop Curve Numbers				
	P→A	B→T	P→B	A→T	P→T		P→A	B→T	P→B	A→T	P→T
2	⑤	④	⑤	⑥	—	60	⑦	⑤	⑦	⑦	②
3	⑤	③	⑤	⑤	⑦	7	⑤	④	⑤	⑥	—
4	⑤	③	⑤	⑤	—	9	⑤	④	⑤	⑥	—
40	⑤	④	⑤	⑥	—	10	⑤	②	⑤	⑥	—
5	⑦	④	⑤	⑤	⑤	11	⑥	④	⑤	⑥	—
6	⑤	③	⑤	⑥	①	12	⑤	④	⑤	⑤	—

S-DSHG-04

Spool Type	Pressure Drop Curve Numbers					Spool Type	Pressure Drop Curve Numbers				
	P→A	B→T	P→B	A→T	P→T		P→A	B→T	P→B	A→T	P→T
2	②	②	②	④	—	60	⑥	④	⑥	⑦	②
4	②	③	②	⑤	—	10	②	②	②	④	—
40	②	④	②	⑥	—	12	②	②	②	⑤	—

DSHG-06, S-DSHG-06

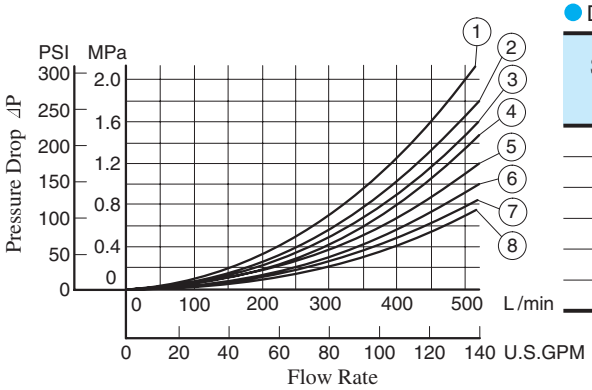

DSHG-06

Spool Type	Pressure Drop Curve Numbers					Spool Type	Pressure Drop Curve Numbers				
	P→A	B→T	P→B	A→T	P→T		P→A	B→T	P→B	A→T	P→T
2	8	5	8	7	—	60	6	5	6	7	1
3	6	4	6	7	4	7	6	4	6	7	—
4	8	5	8	7	—	9	6	5	6	7	—
40	8	5	8	7	—	10	8	5	8	7	—
5	8	4	5	7	1	11	8	4	5	7	—
6	5	3	5	4	1	12	8	5	8	7	—

S-DSHG-06

Spool Type	Pressure Drop Curve Numbers					Spool Type	Pressure Drop Curve Numbers				
	P→A	B→T	P→B	A→T	P→T		P→A	B→T	P→B	A→T	P→T
2	6	1	6	2	—	60	6	2	6	3	1
4	6	2	6	2	—	10	8	5	8	7	—
40	8	5	8	7	—	12	8	5	8	7	—

DSHG-10, S-DSHG-10

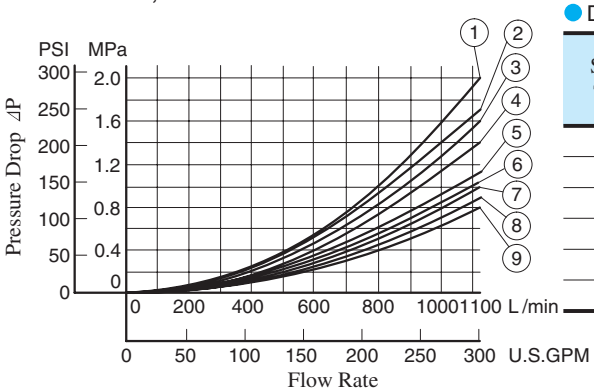

DSHG-10

Spool Type	Pressure Drop Curve Numbers					Spool Type	Pressure Drop Curve Numbers				
	P→A	B→T	P→B	A→T	P→T		P→A	B→T	P→B	A→T	P→T
2	9	6	9	8	—	60	8	5	8	5	3
3	7	6	7	7	5	7	7	6	7	7	—
4	9	6	9	6	—	9	7	6	7	8	—
40	9	6	9	8	—	10	9	5	9	8	—
5	9	6	8	6	1	11	9	6	8	7	—
6	5	3	5	2	2	12	9	7	9	6	—

S-DSHG-10

Spool Type	Pressure Drop Curve Numbers					Spool Type	Pressure Drop Curve Numbers				
	P→A	B→T	P→B	A→T	P→T		P→A	B→T	P→B	A→T	P→T
2	8	3	8	4	—	60	8	4	8	4	2
4	8	5	8	6	—	10	9	5	9	8	—
40	9	6	9	8	—	12	9	7	9	6	—

- For any other viscosity, multiply the factors in the table below.

Viscosity	mm^2/s	15	20	30	40	50	60	70	80	90	100
	SSU	77	98	141	186	232	278	324	371	417	464
Factor		0.81	0.87	0.96	1.03	1.09	1.14	1.19	1.23	1.27	1.30

- For any other specific gravity (G'), the pressure drop (⊿ P') may be obtained from the formula right.

$$\Delta P' = \Delta P(G'/0.850)$$

Typical Changeover Time

Changeover time varies according to oil viscosity, spool type and hydraulic circuit.

● Test Conditions

Coil Type : D∗(Models with DC solenoids)
Voltage : Rated Voltage
Oil Viscosity : 35 mm^2/s (164 SSU)

● DSHG-04

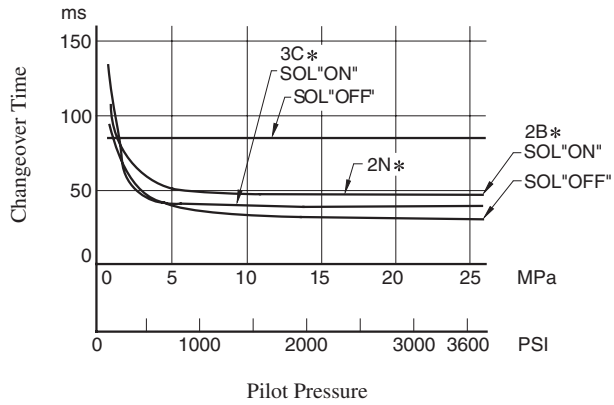

● DSHG-06

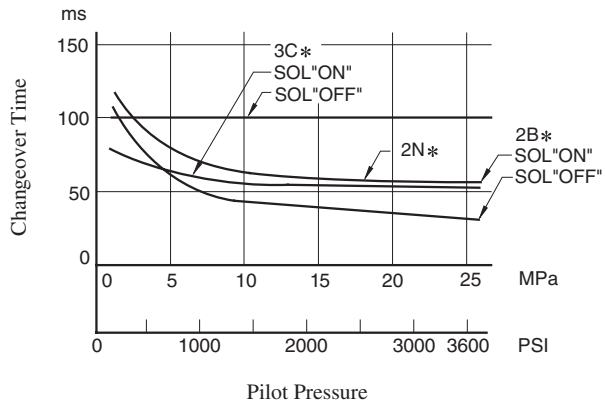

● DSHG-10

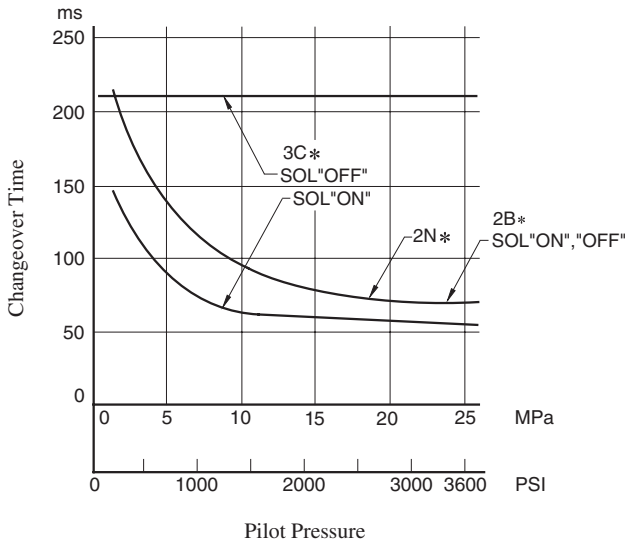

Mounting surface: ISO 4401-AB-03-4-A

Terminal Box type: DSHG-01-∗∗∗-∗-14/1490

Internal Pilot - Internal Drain

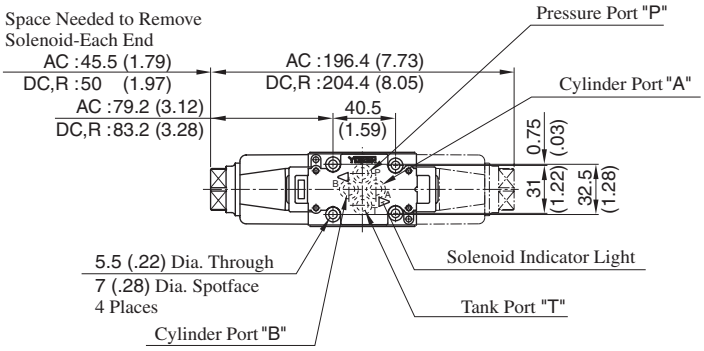

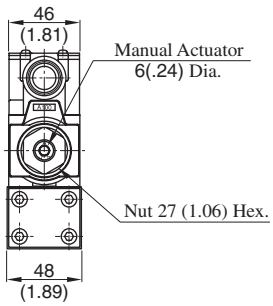

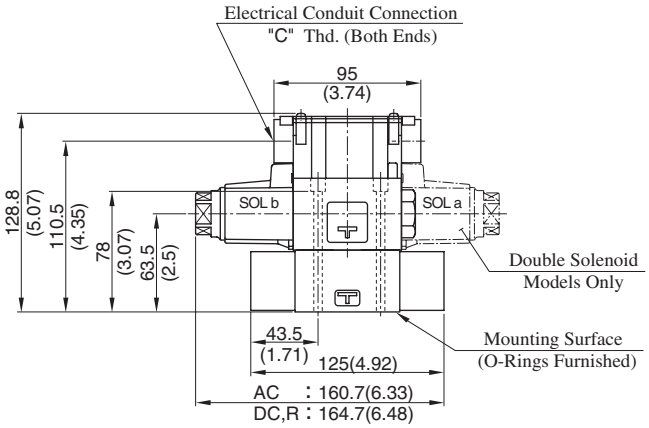

Model Numbers	"C" Thd.	"D" Thd.
DSHG-01-∗∗∗-∗-14	G 1/2	Rc 1/4
DSHG-01-∗∗∗-∗-1490	1/2 NPT	1/4 NPT

DIMENSIONS IN MILLIMETRES (INCHES)

External Pilot - External Drain
External Pilot - Internal Drain
Internal Pilot - External Drain

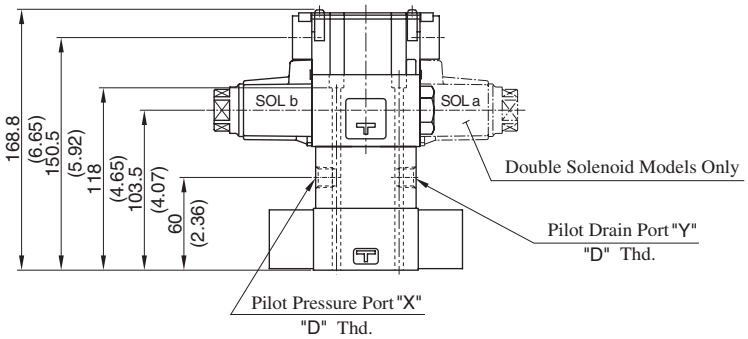

- For other dimensions, refer to "Internal Pilot Internal Drain".

E

Solenoid Controlled Pilot Operated Directional Valves

Mounting surface: ISO 4401-AB-03-4-A

Plug-in Connector Type: DSHG-01-∗∗∗-∗-$^{N}_{N1}$-14/1480/1490

● **Internal Pilot-Internal Drain**

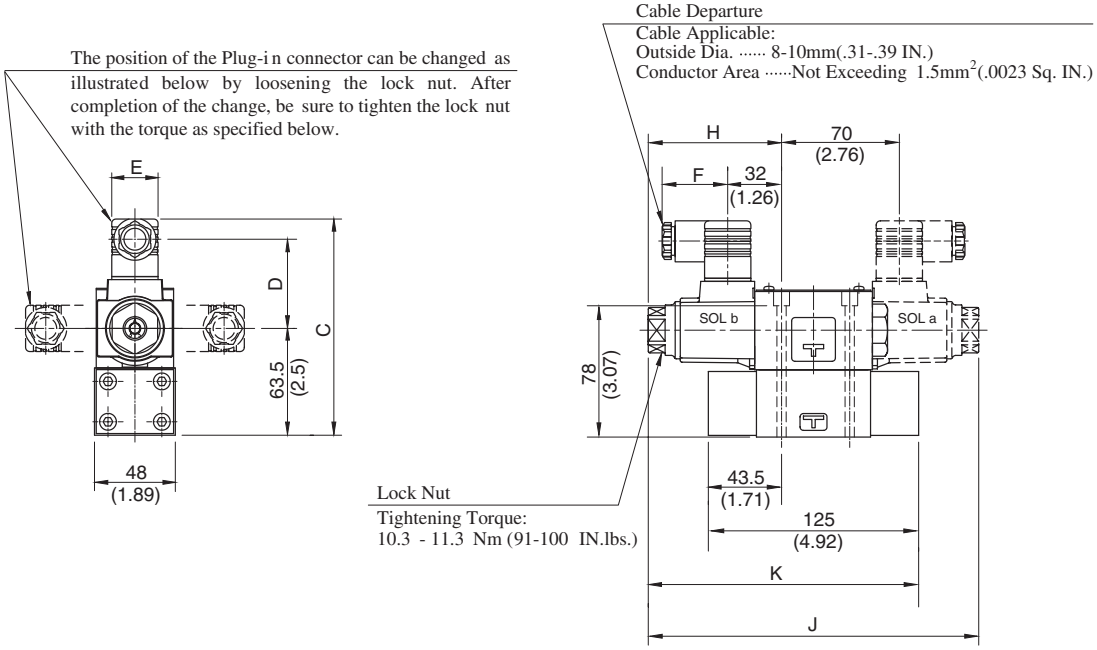

DIMENSIONS IN MILLIMETRES (INCHES)

● **External Pilot-External Drain**

● **External Pilot-Internal Drain**

● **Internal Pilot-External Drain**

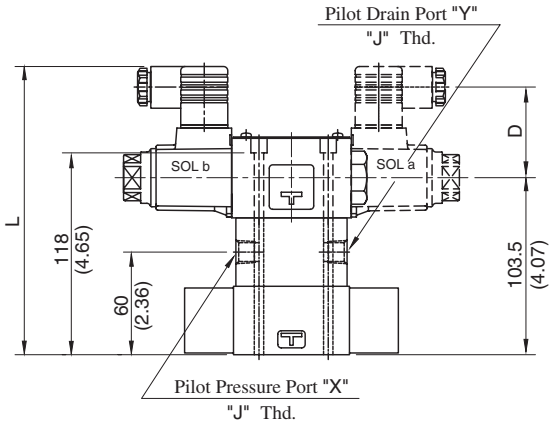

Model Numbers	"J" Thd.
DSHG-01-∗∗∗-∗-N∗-14	Rc 1/4
DSHG-01-∗∗∗-∗-N∗-1480	1/4 BSP.F
DSHG-01-∗∗∗-∗-N∗-1490	1/4 NPT

Model Numbers	Dimensions mm (Inches)							
	C	D	E	F	H	J	K	L
DSHG-01-∗∗∗-∗-A∗-N/N1	128.5 (5.06)	53 (2.09)	27.5 (1.08)	39 (1.54)	79.2 (3.12)	196.4 (7.73)	160.7 (6.33)	168.5 (6.63)
DSHG-01-∗∗∗-∗-D∗-N/N1	139.5 (5.49)	64 (2.52)	27.5 (1.08)	39 (1.54)	83.2 (3.28)	204.4 (8.05)	164.7 (6.48)	179.5 (7.07)
DSHG-01-∗∗∗-∗-R∗-N	142.5 (5.61)	57.2 (2.25)	34 (1.34)	53 (2.09)				182.5 (7.19)

● For other dimensions, refer to "Terminal Box Type".

Terminal Box Type: DSHG-03-∗∗∗-∗-14/1490

Mounting surface: ISO 4401-AC-05-4-A
(The pilot and drain ports in accordance with the ISO original draft)

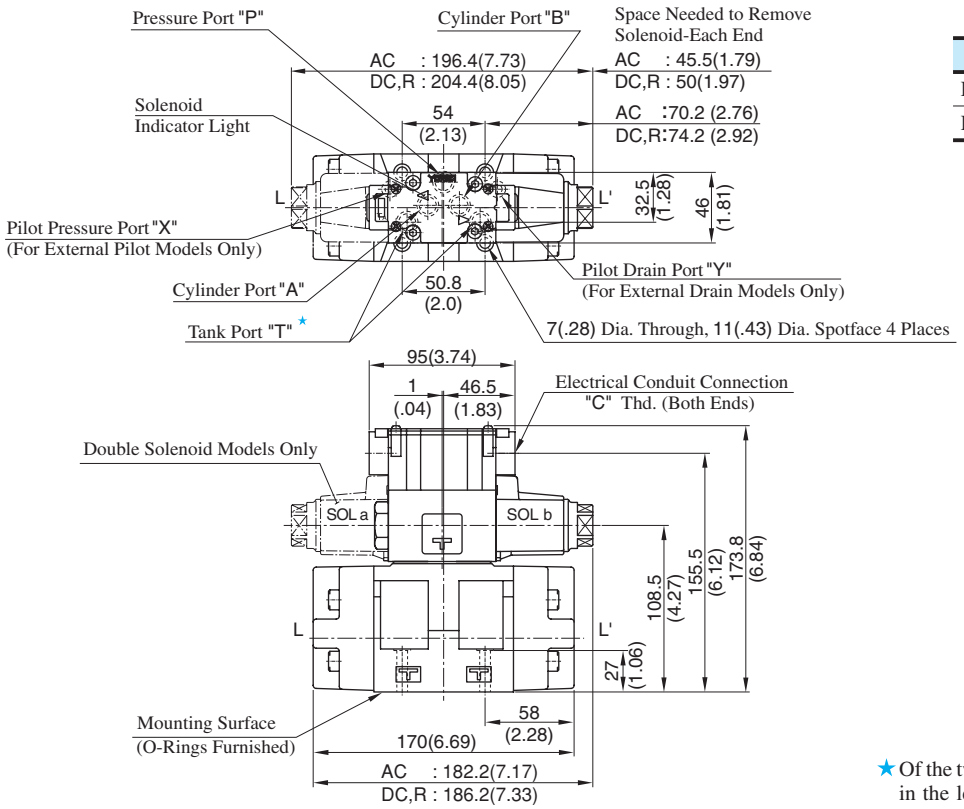

Model Numbers	"C" Thd.
DSHG-03-∗∗∗-∗-14	G 1/2
DSHG-03-∗∗∗-∗-1490	1/2 NPT

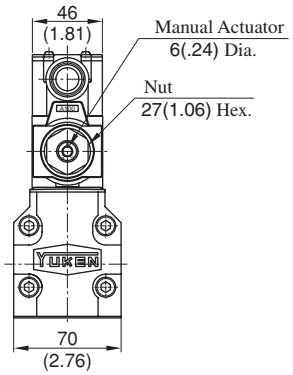

★ Of the two of tank port "T", the tank port in the left side is normally used in our standard sub-plate, though, either side of the tank port "T" can be used without problem.

DIMENSIONS IN MILLIMETRES (INCHES)

Plug-in Connector Type: DSHG-03-∗∗∗-∗-$^{N}_{N1}$-14/1490

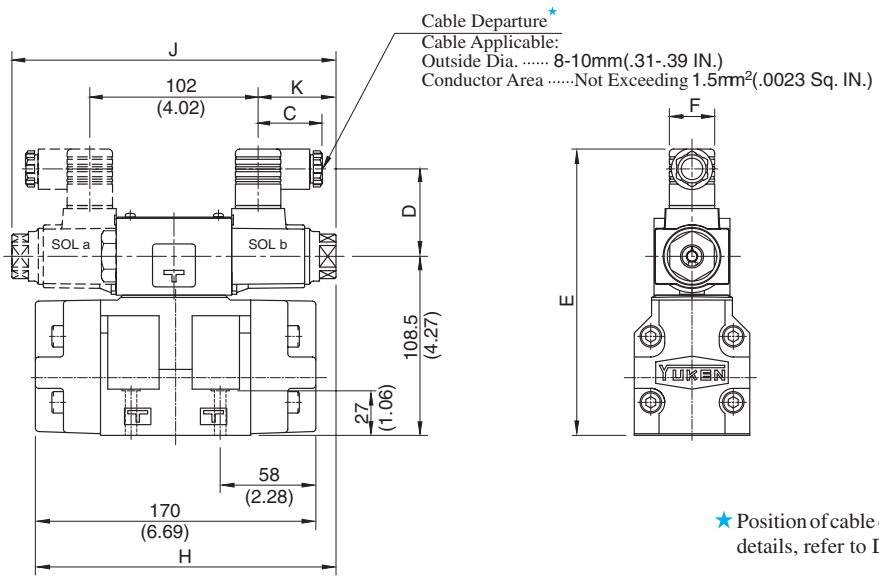

★ Position of cable departure can be changed. For details, refer to DSHG-01 valve on page 396.

Model Numbers	Dimensions mm (Inches)						
	C	D	E	F	H	J	K
DSHG-03-∗∗∗-∗-A∗-N/N1	39 (1.54)	53 (2.09)	173.5 (6.83)	27.5 (1.08)	182.2 (7.17)	196.4 (7.73)	47.2 (1.86)
DSHG-03-∗∗∗-∗-D∗-N/N1	39 (1.54)	64 (2.52)	184.5 (7.26)	27.5 (1.08)	186.2 (7.33)	204.4 (8.05)	51.2 (2.02)
DSHG-03-∗∗∗-∗-R∗-N	53 (2.09)	57.2 (2.25)	187.5 (7.38)	34 (1.34)			

● For other dimensions, refer to "Terminal Box Type".

Terminal Box Type: (S-)DSHG-04-∗∗∗-∗-52/5290

Mounting surface:
ISO 4401-AD-07-4-A

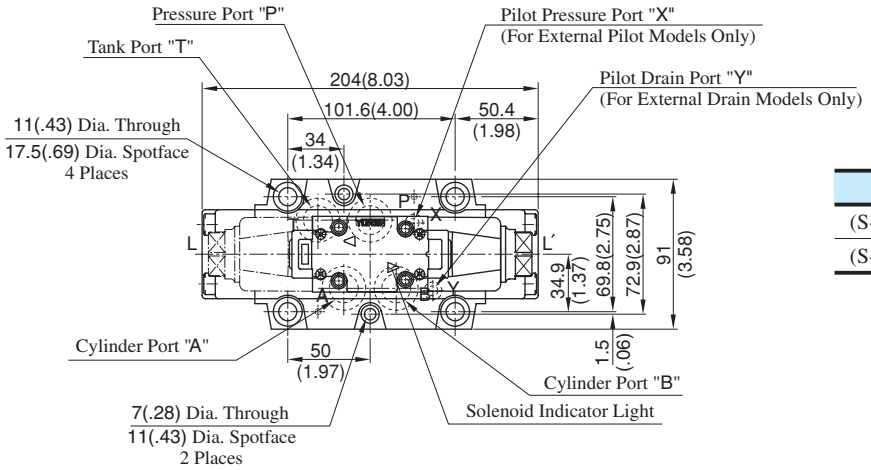

Model Numbers	"C" Thd.
(S-)DSHG-04-∗∗∗-∗-52	G 1/2
(S-)DSHG-04-∗∗∗-∗-5290	1/2 NPT

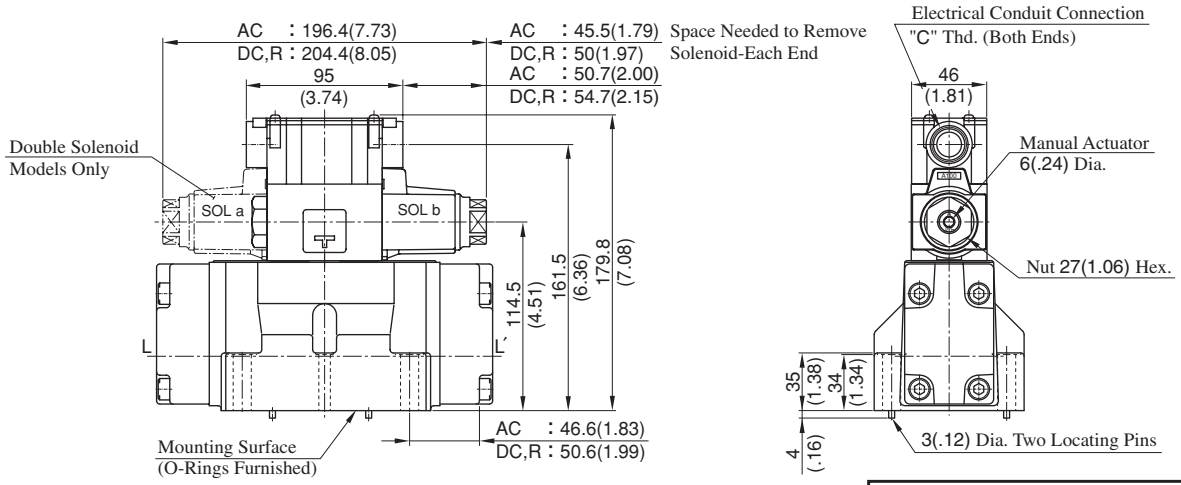

DIMENSIONS IN MILLIMETRES (INCHES)

Plug-in Connector Type: (S-)DSHG-04-∗∗∗-∗-$^{N}_{N1}$-52/5290

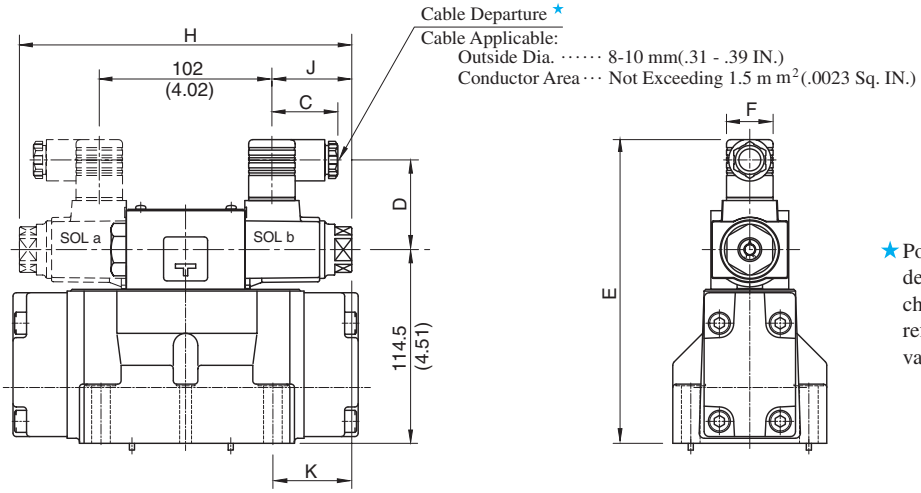

★ Position of cable departure can be changed. For details, refer to DSHG-01 valve on page 396.

Model Numbers	Dimensions mm (Inches)						
	C	D	E	F	H	J	K
(S-)DSHG-04-∗∗∗-A∗-N/N1	39 (1.54)	53 (2.09)	173.5 (6.83)	27.5 (1.08)	196.4 (7.73)	47.2 (1.86)	45.6 (1.80)
(S-)DSHG-04-∗∗∗-D∗-N/N1	39 (1.54)	64 (2.52)	184.5 (7.26)	27.5 (1.08)	204.4 (8.05)	51.2 (2.02)	49.6 (1.95)
(S-)DSHG-04-∗∗∗-R∗-N	53 (2.09)	57.2 (2.25)	187.6 (7.39)	34 (1.34)			

● For other dimensions, refer to "Terminal Box Type".

Terminal Box Type: (S-)DSHG-06-∗∗∗-∗-53/5390

Mounting surface:
ISO 4401-AE-08-4-A

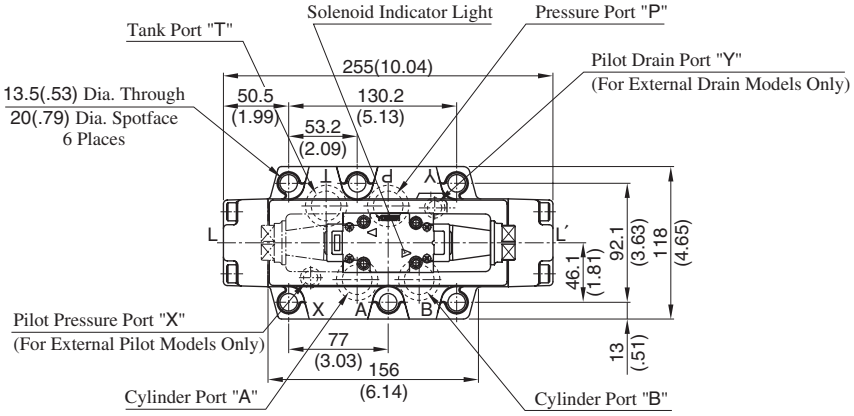

Model Numbers	"C" Thd.
(S-)DSHG-06-∗∗∗-∗-53	G 1/2
(S-)DSHG-06-∗∗∗-∗-5390	1/2 NPT

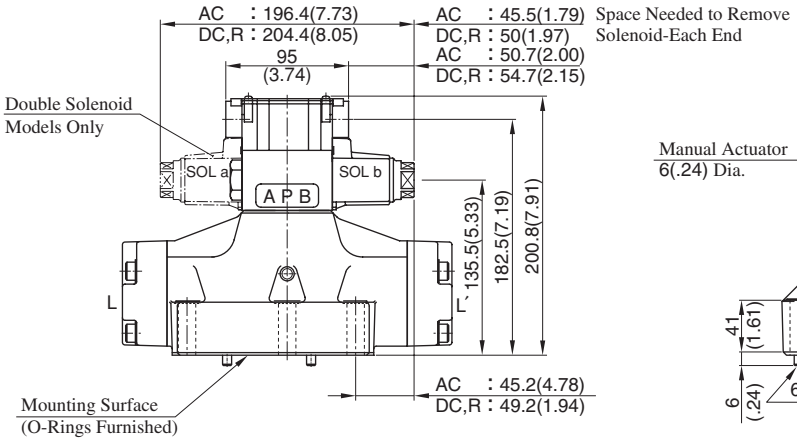

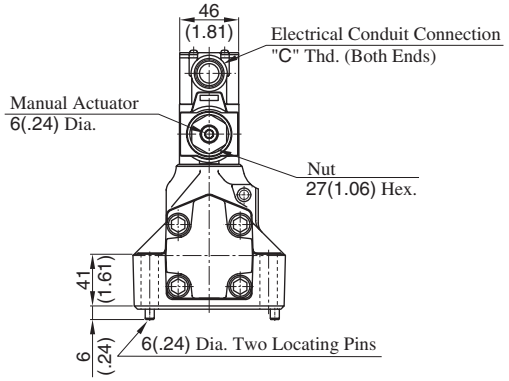

DIMENSIONS IN MILLIMETRES (INCHES)

Plug-in Connector Type: (S-)DSHG-06-∗∗∗-∗-$^{N}_{N1}$-53/5390

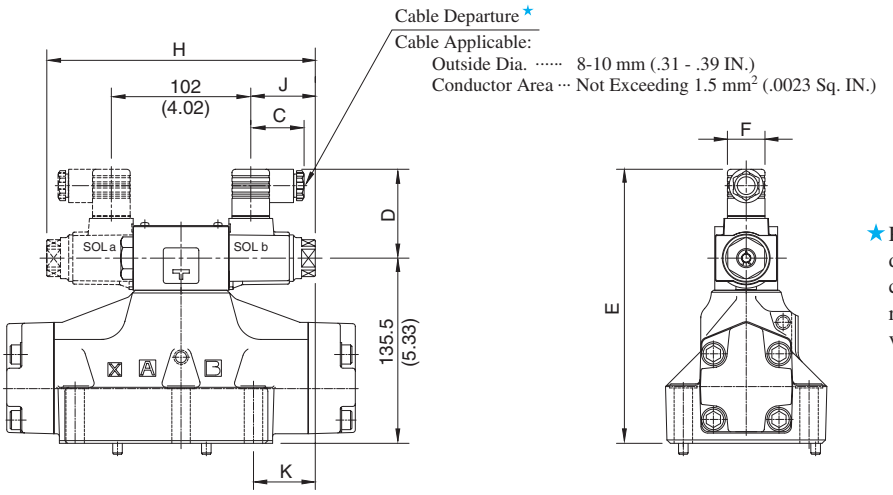

★ Position of cable departure can be changed. For details, refer to DSHG-01 valve on page 396.

Model Numbers	Dimensions mm (Inches)						
	C	D	E	F	H	J	K
(S-)DSHG-06-∗∗∗-A∗-N/N1	39 (1.54)	53 (2.09)	200.5 (7.95)	27.5 (1.08)	196.4 (7.73)	47.2 (1.86)	45.2 (1.78)
(S-)DSHG-06-∗∗∗-D∗-N/N1	39 (1.54)	64 (2.52)	211.5 (8.33)	27.5 (1.08)	204.4 (8.05)	51.2 (2.02)	49.2 (1.94)
(S-)DSHG-06-∗∗∗-R∗-N	53 (2.09)	57.2 (2.25)	214.5 (8.44)	34 (1.34)			

● For other dimensions, refer to "Terminal Box Type".

Terminal Box Type: (S-)DSHG-10-∗∗∗-∗-43/4390

Mounting surface:
ISO 4401-AF-10-4-A

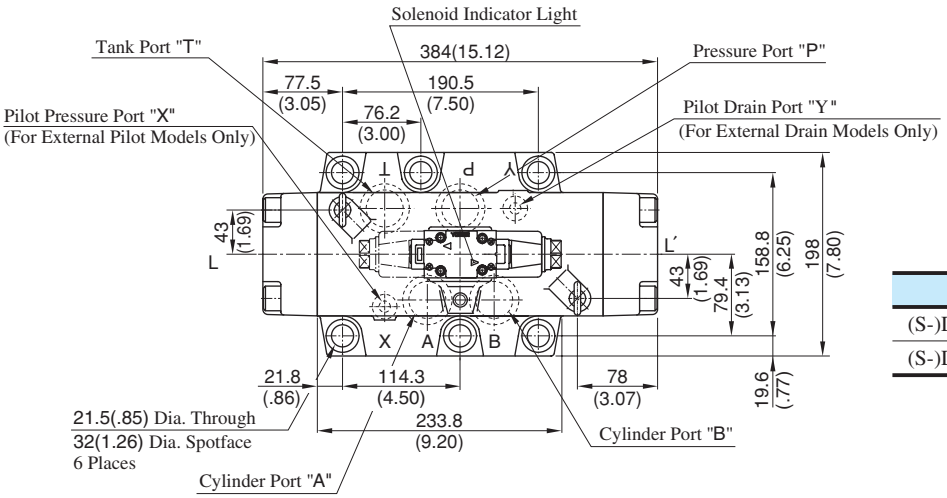

Model Numbers	"C" Thd.
(S-)DSHG-10-∗∗∗-∗-43	G 1/2
(S-)DSHG-10-∗∗∗-∗-4390	1/2 NPT

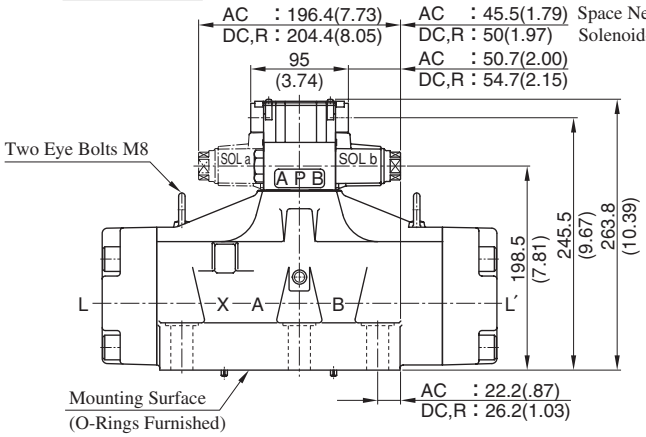

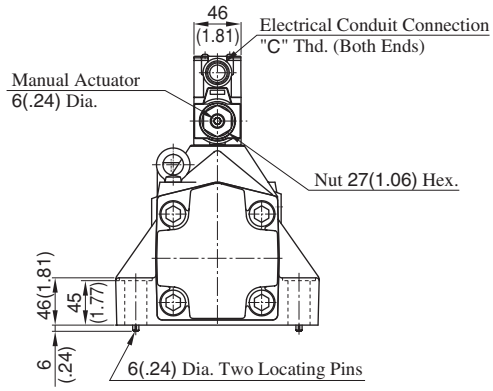

DIMENSIONS IN MILLIMETRES (INCHES)

Plug-in Connector Type: (S-)DSHG-10-∗∗∗-∗-$^{N}_{N1}$-43/4390

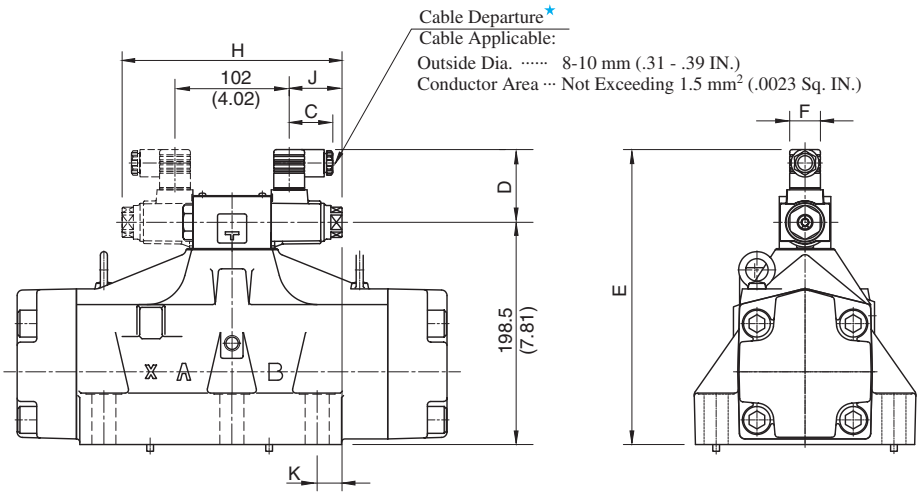

★Position of cable departure can be changed. For details, refer to DSHG-01 valve on page 396.

Model Numbers	Dimensions mm (Inches)						
	C	D	E	F	H	J	K
(S-)DSHG-10-∗∗∗-A∗-N/N1	39 (1.54)	53 (2.09)	263.5 (10.37)	27.5 (1.08)	196.4 (7.73)	47.2 (1.86)	22.2 (.87)
(S-)DSHG-10-∗∗∗-D∗-N/N1	39 (1.54)	64 (2.52)	274.5 (10.81)	27.5 (1.08)	204.4 (8.05)	51.2 (2.02)	26.2 (1.03)
(S-)DSHG-10-∗∗∗-R∗-N	53 (2.09)	57.2 (2.25)	277.5 (10.93)	34 (1.34)			

● For other dimensions, refer to "Terminal Box Type".

Sub-plate

● DHGM-03Y-10/1080/1090

Sub-plate Model Numbers	"C" Thd.	"D" Thd.	"E" Thd.	F mm (in.)
DHGM-03Y-10	Rc 3/4	Rc 1/4	M6	13(.51)
DHGM-03Y-1080	3/4 BSP.F	1/4 BSP.F		
DHGM-03Y-1090	3/4 NPT	1/4 NPT	1/4-20 UNC	15(.59)

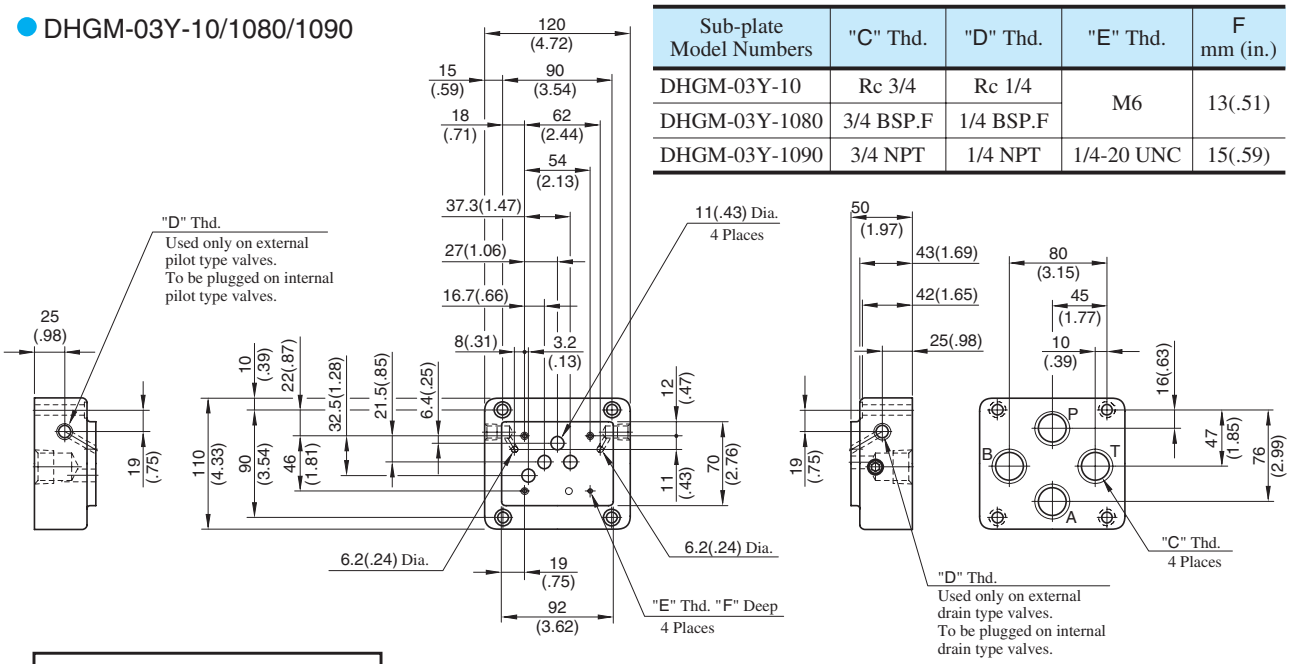

DIMENSIONS IN MILLIMETRES (INCHES)

● DHGM-$^{04}_{04X}$-20/2080/2090

Sub-plate Model Numbers	"C" Thd.	"D" Thd.	"E" Thd.	"F" Thd.
DHGM-04-20 DHGM-04X-20	Rc 1/2 Rc 3/4	Rc 1/4	M10	M6
DHGM-04-2080 DHGM-04X-2080	1/2 BSP.F 3/4 BSP.F	1/4 BSP.F		
DHGM-04-2090 DHGM-04X-2090	1/2 NPT 3/4 NPT	1/4 NPT	3/8-16 UNC	1/4-20 UNC

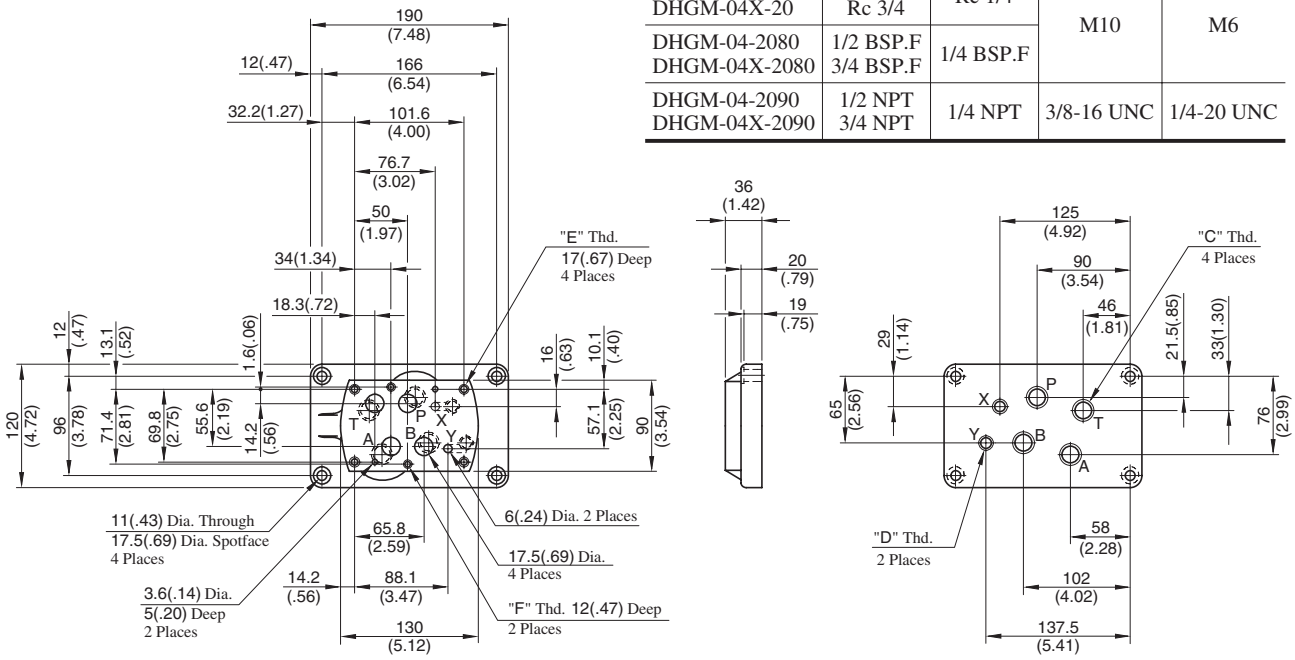

Valve Types		Pilot Pressure Port "X"	Port "Y"
Solenoid Controlled Pilot Operated Directional Valves		Used only on external pilot type valves. To be plugged on internal pilot type valves.	Used as drain port only on external drain type valves. To be plugged on internal drain type valves.
Pilot Operated Directional Valves	Spring Centred No-spring	Used	Used as pilot pressure port
	Spring Offset		Used as pilot drain port
Manually Operated Directional Valves		Not used (plug is not required)	Used as drain port

Sub-plate

● DHGM-$^{06}_{06X}$-50/5090

Sub-plate Model Numbers	"C" Thd.	"D" Thd.	"E" Thd.	F mm (in.)
DHGM-06-50	Rc 3/4	Rc 1/4	M12	24 (.94)
DHGM-06X-50	Rc 1			
DHGM-06-5090	3/4 NPT	1/4 NPT	1/2-13 UNC	26 (1.02)
DHGM-06X-5090	1 NPT			

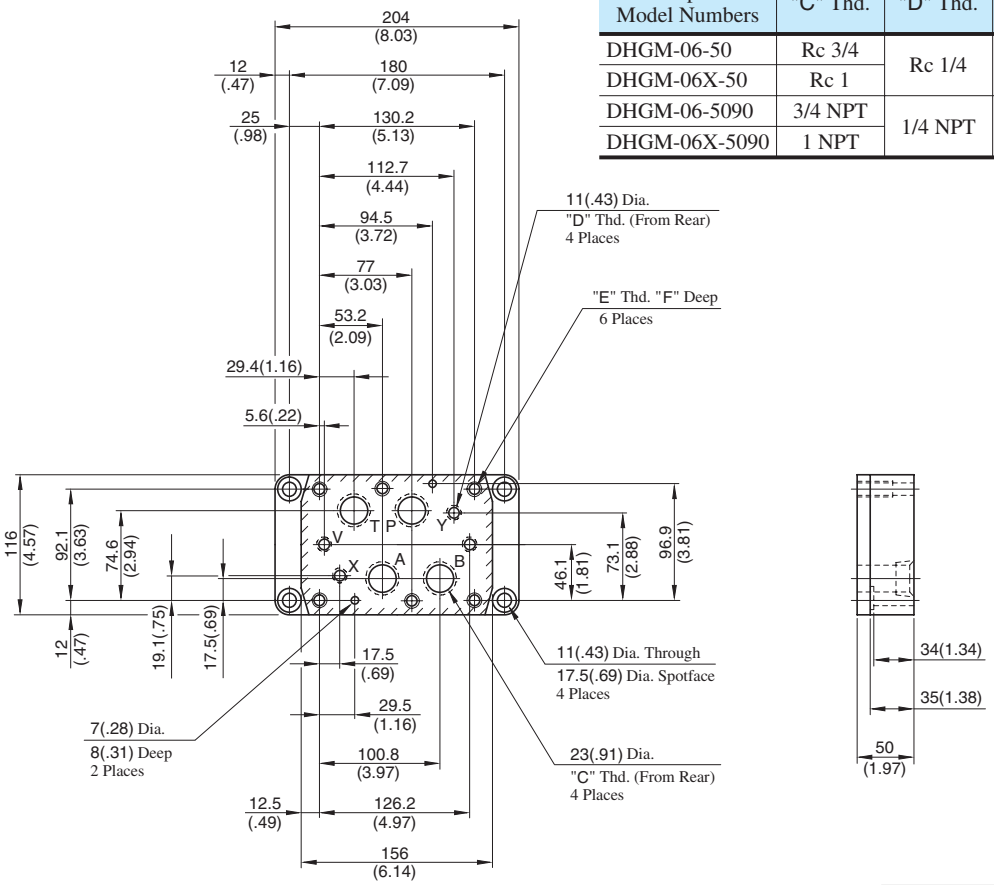

DIMENSIONS IN MILLIMETRES (INCHES)

● DHGM-$^{06}_{06X}$-5080

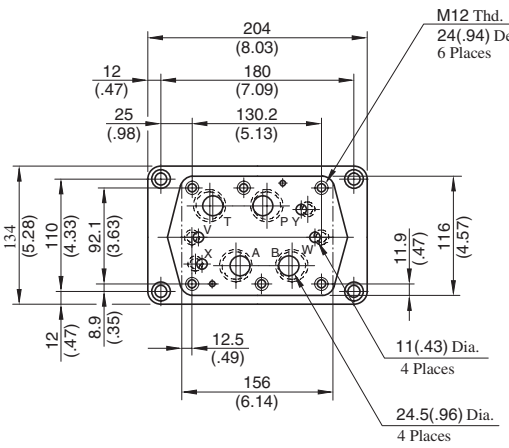

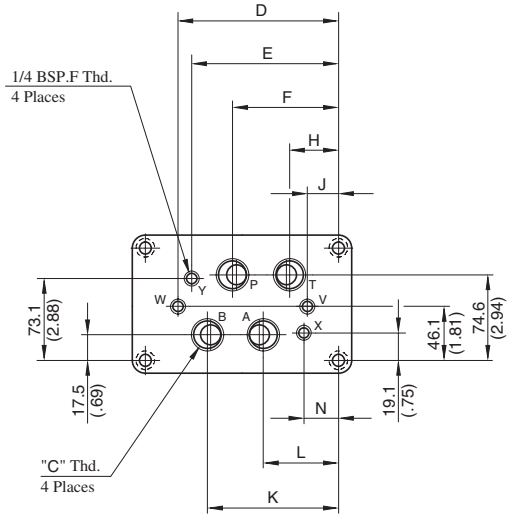

Sub-plate Model Numbers	"C" Thd.	Dimensions mm (Inches)							
		D	E	F	H	J	K	L	N
DHGM-06-5080	3/4 BSP.F	151.2 (5.95)	137.7 (5.42)	102 (4.02)	54.4 (2.14)	30.6 (1.20)	125.8 (4.95)	78.2 (3.08)	42.5 (1.67)
DHGM-06X-5080	1 BSP.F	155.2 (6.11)	148 (5.83)	106 (4.17)	50 (1.97)	25 (.98)	130 (5.12)	74 (2.91)	32 (1.26)

For other dimensions, refer to "DHGM-06∗-50/5090" above.

∗ For Uses of Port "X", "Y", "V", "W", refer to DHGM-10∗ on the following page.

Sub-plate

● DHGM-$^{10}_{10X}$-40/4080/4090

DIMENSIONS IN MILLIMETRES (INCHES)

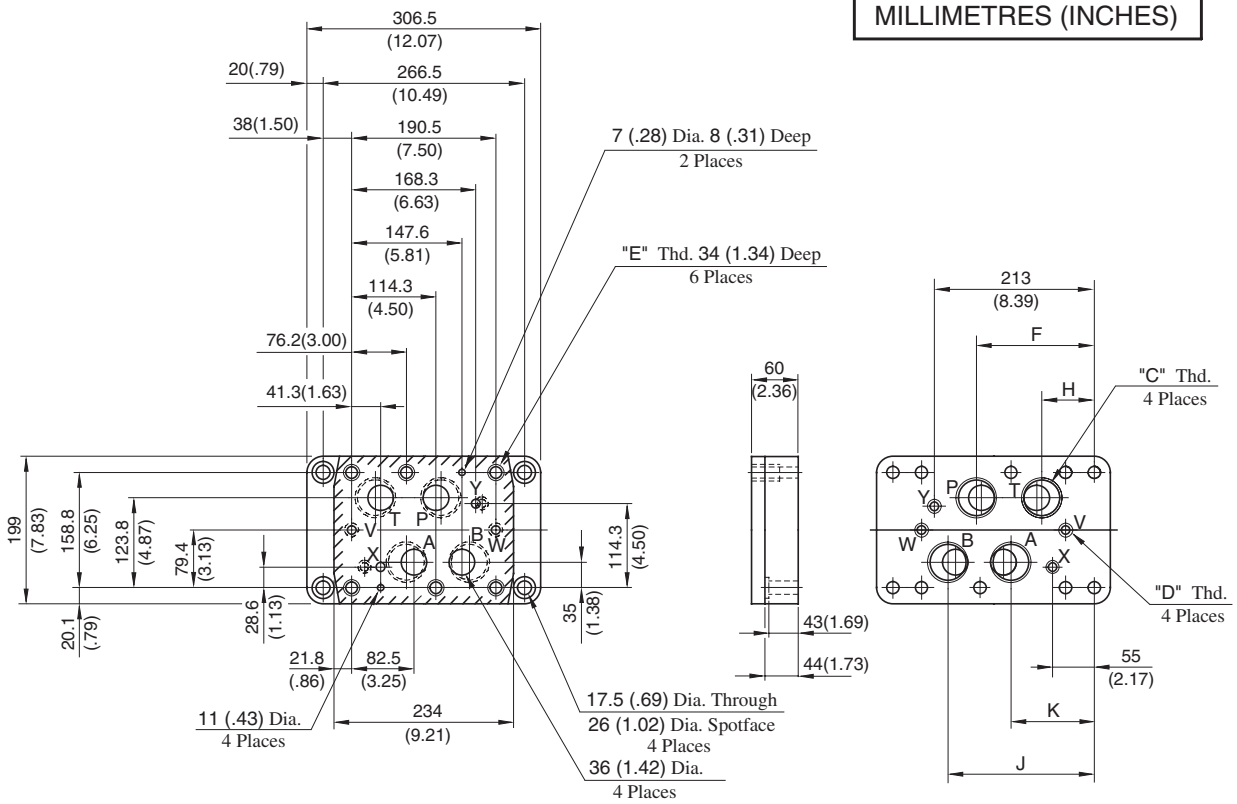

Sub-plate Model Numbers	"C" Thd.	"D" Thd.	"E" Thd.	Dimensions mm (Inches)			
				F	H	J	K
DHGM-10-40 DHGM-10-4080 DHGM-10-4090	Rc 1-1/4 1-1/4 BSP.F 1-1/4 NPT	Rc 3/8 3/8 BSP.F 3/8 NPT	M20 M20 3/4-10 UNC	152 (5.98)	79 (3.11)	185.5 (7.30)	120.5 (4.74)
DHGM-10X-40 DHGM-10X-4080 DHGM-10X-4090	Rc 1-1/2 1-1/2 BSP.F 1-1/2 NPT	Rc 3/8 3/8 BSP.F 3/8 NPT	M20 M20 3/4-10 UNC	156 (6.14)	74 (2.91)	194.5 (7.66)	112.5 (4.43)

Note: Uses of port "X", "Y", "V", and "W"

Valve Types			Pilot Pres. Port "X"	Port "Y"	Drain Port "V"	Drain Port "W"
Solenoid Controlled Pilot Operated Directional Valves	Spring Centred, No-spring, Spring Offset		Used only on external pilot type valves. To be plugged on internal pilot type valves.	Used as drain port only on external drain type valves. To be plugged on★ internal drain type valves.	Not used (plug is not required)	
	Pressure Centred				Used	Not used
	With Pilot Piston, Both Ends				Used	Used
	With Pilot Piston, Port "A" End				Used	Not used (plug is required)
	With Pilot Piston, Port "B" End				Not used (plug is required)	Used
Pilot Operated Directional Valves	Spring Centred, No-spring		Used	Used as pilot pres. port	Not used (plug is not required)	
	Spring Offset			Used as pilot drain port		
	Pressure Centred			Used as pilot pres. port	Used	Not used
	With Pilot Piston, Both Ends				Used	Used
	With Pilot Piston, Port "B" End				Not used (pllug is required)	Used
	With Pilot Piston Port "A" End	Spring Centred No-spring		Used as pilot pres. port	Used	Not used (plug is required)
		Spring Offset		Used as pilot drain port		
Manually Operated Directional Valves			Not used (plug is not required)	Not used (plug is not required)	Used	Not used (plug is not required)

★ As the thread is provided on the body, plug either port on the sub-plate or port on the body.

Options

Models with Pilot Choke Valve

Terminal Box Type

● DSHG-03- ∗∗∗-C1/C2/C1C2

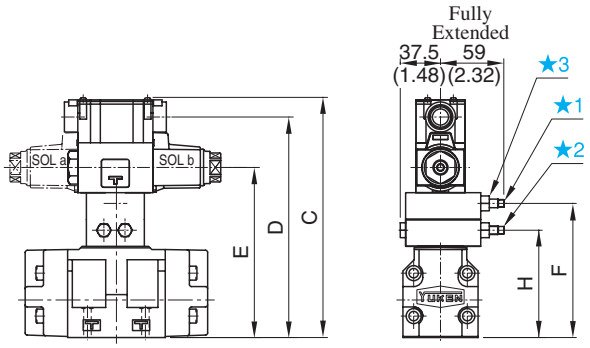

● (S-)DSHG-04- ∗∗∗ -C1/C2/C1C2

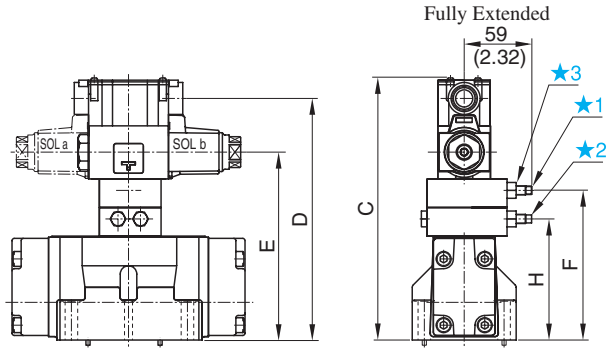

● (S-)DSHG-$^{06}_{10}$ - ∗∗∗ -C1/C2/C1C2

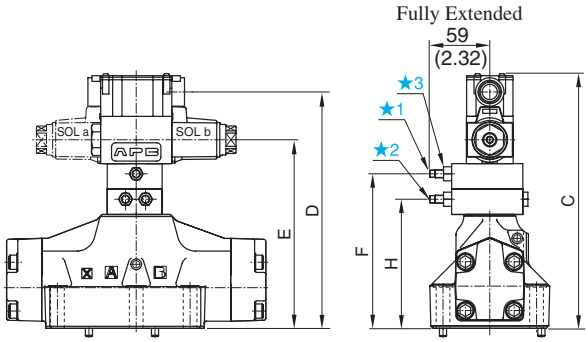

Plug-in Connector Type

● DSHG-03- ∗∗∗ -C1/C2/C1C2-$^{N}_{N1}$

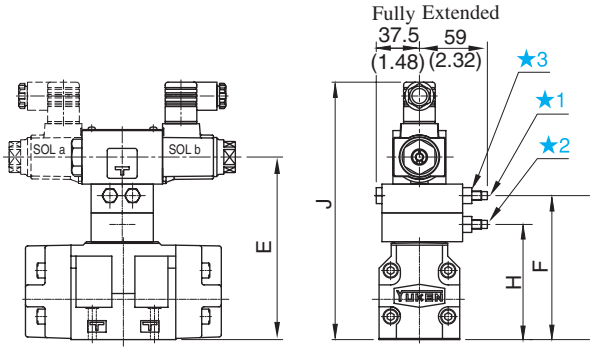

● (S-)DSHG-04- ∗∗∗ -C1/C2/C1C2-$^{N}_{N1}$

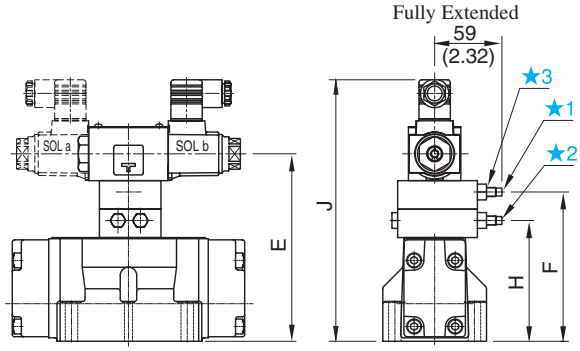

● (S-)DSHG-$^{06}_{10}$ - ∗∗∗ -C1/C2/C1C2-$^{N}_{N1}$

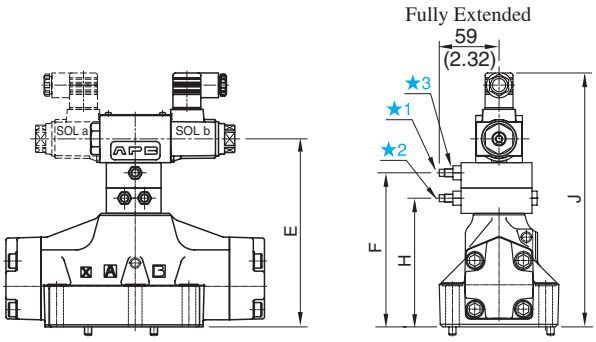

★1. "C1" Choke Adj. Screw 6 (.24) Hex.
★2. "C2" Choke Adj. Screw 6 (.24) Hex.
★3. Lock Nut 12 (.47) Hex.

DIMENSIONS IN MILLIMETRES (INCHES)

Model Numbers	Dimensions mm (Inches)							
	C	D	E	F	H	J		
						AC SO L	DC SO L	R SOL
DSHG-03- ∗∗∗ -C1	198.8 (7.83)	180.5 (7.11)	133.5 (5.26)	100 (3.94)	—	198.5 (7.81)	209.5 (8.25)	212.5 (8.37)
DSHG-03- ∗∗∗ -C2				—	100 (3.94)			
DSHG-03- ∗∗∗ -C1C2	223.8 (8.81)	205.5 (8.09)	158.5 (6.24)	125 (4.92)	100 (3.94)	223.5 (8.80)	234.5 (9.23)	237.5 (9.35)
(S-) DSHG-04- ∗∗∗ -C1	204.8 (8.06)	186.5 (7.34)	139.5 (5.49)	106 (4.17)	—	204.5 (8.05)	215.5 (8.48)	218.5 (8.60)
(S-) DSHG-04- ∗∗∗ -C2				—	106 (4.17)			
(S-) DSHG-04- ∗∗∗ -C1C2	229.8 (9.05)	211.5 (8.33)	164.5 (6.48)	131 (5.16)	106 (4.17)	229.5 (9.04)	240.5 (9.47)	243.5 (9.59)
(S-) DSHG-06- ∗∗∗ -C1	225.8 (8.89)	207.5 (8.17)	160.5 (6.32)	127 (5.00)	—	225.5 (8.88)	236.5 (9.31)	239.5 (9.43)
(S-) DSHG-06- ∗∗∗ -C2				—	127 (5.00)			
(S-) DSHG-06- ∗∗∗ -C1C2	250.8 (9.87)	232.5 (9.15)	185.5 (7.30)	152 (5.98)	127 (5.00)	250.5 (9.86)	261.5 (10.30)	264.5 (10.41)
(S-) DSHG-10- ∗∗∗ -C1	288.8 (11.37)	270.5 (10.65)	223.5 (8.80)	190 (7.48)	—	288.5 (11.36)	299.5 (11.79)	302.5 (11.91)
(S-) DSHG-10- ∗∗∗ -C2				—	190 (7.48)			
(S-) DSHG-10- ∗∗∗ -C1C2	313.8 (12.35)	295.5 (11.63)	248.5 (9.78)	215 (8.46)	190 (7.48)	313.5 (12.34)	324.5 (12.78)	327.5 (12.89)

Options

Models with Stroke Adjustment

● DSHG-03-∗∗∗-R∗

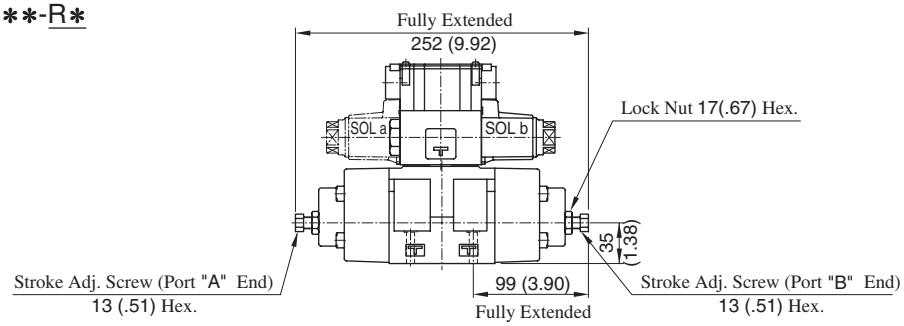

● (S-)DSHG-04-∗∗∗-R∗

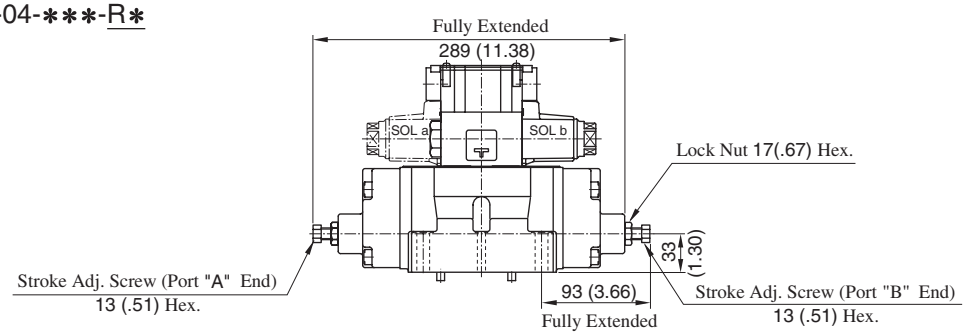

● (S-)DSHG-$^{06}_{10}$-∗∗∗-R∗

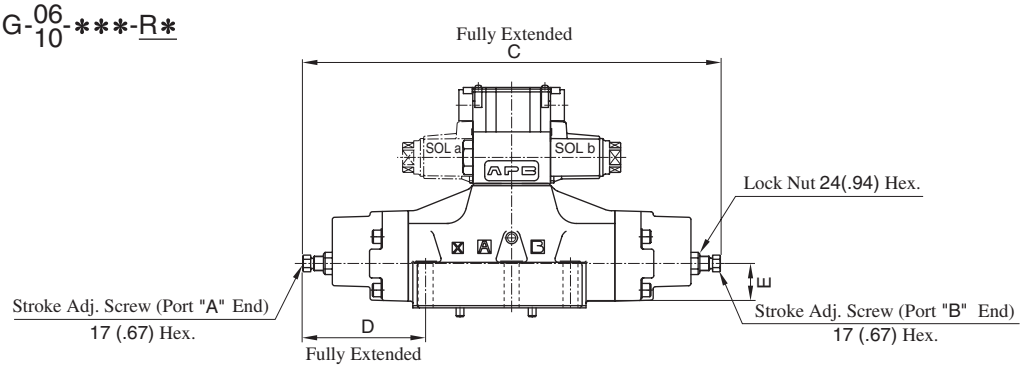

Model Numbers	C	D	E
(S-)DSHG-06-∗∗∗-R2	376 (14.80)	111 (4.37)	40 (1.57)
(S-)DSHG-10-∗∗∗-R2	558 (21.97)	164.5 (6.48)	65 (2.56)

DIMENSIONS IN MILLIMETRES (INCHES)

Pressure Centred Models

● (S-)DSHG-$^{06}_{10}$-3H∗

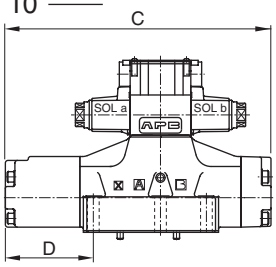

Model Numbers	C	D
(S-)DSHG-06-3H∗	306.5 (12.07)	102 (4.02)
(S-)DSHG-10-3H∗	456 (17.95)	149.5 (5.89)

Models with Pilot Piston

● (S-)DSHG-$^{06}_{10}$-∗∗∗-P∗

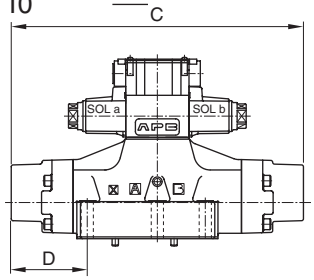

Model Numbers	C	D
(S-)DSHG-06-∗∗∗-P2	323 (12.72)	84 (3.31)
(S-)DSHG-10-∗∗∗-P2	479 (18.86)	125 (4.92)

List of Seals and Pilot Valves

DSHG-01-∗∗∗-∗-14/1480/1490

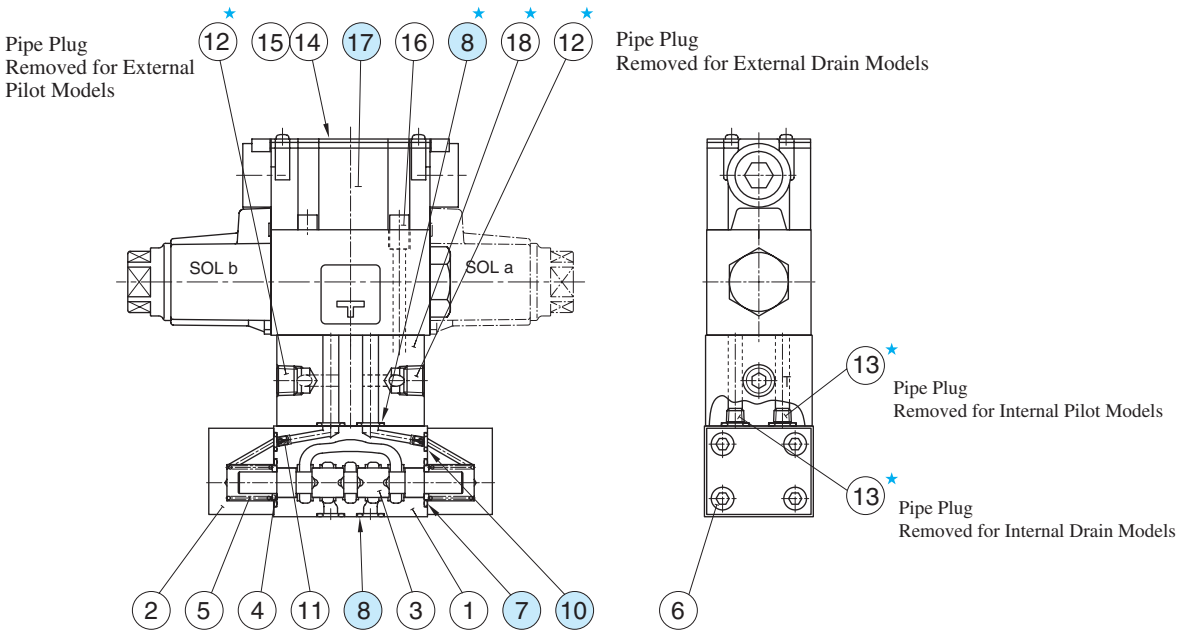

Note: Piece parts marked ★ are not available for internal pilot-internal drain type

DSHG-03-∗∗∗-∗-14/1490

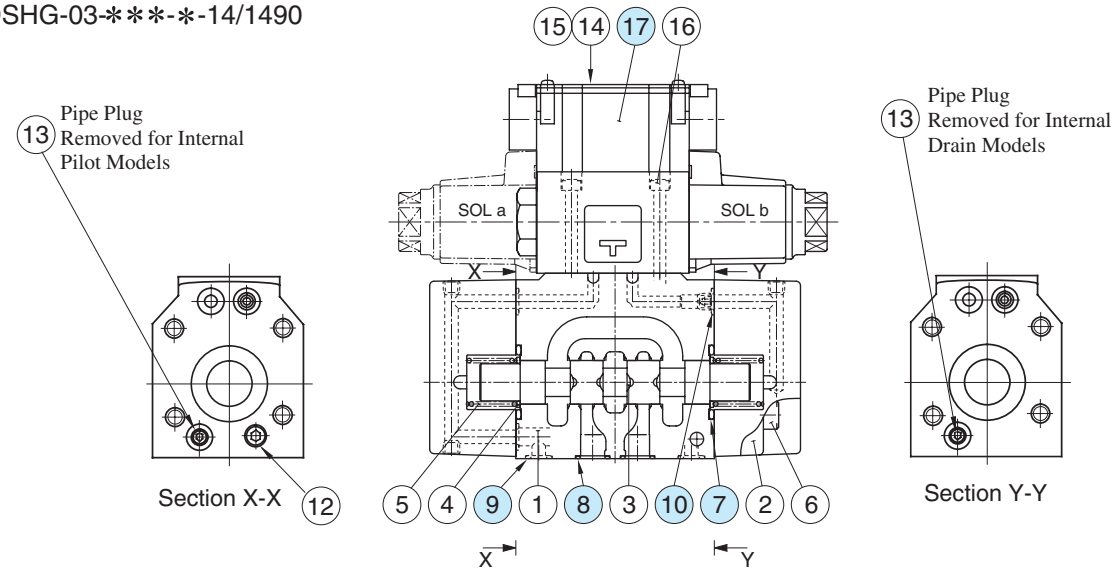

List of Seals

Item	Name	DSHG-01		DSHG-03	
		Part Numbers	Qty.	Part Numbers	Qty.
7	O-Ring	JASO-1018-1A	2	SO-NB-P28	2
8	O-Ring	SO-NB-P9	8(4)★	SO-NB-A104	5
9	O-Ring	—	—	SO-NB-P9	2
10	O-Ring	SO-NB-P5	2	SO-NB-P9	6

★Quantities in the ( ) are applicable to internal pilot-internal drain.

Note: When ordering the o-rings, please specify the seal kit number listed in page 408. In addition to the above o-rings, o-rings for pilot valve is included in the seal kit.
For the detail of the pilot valve o-rings, see page 359.

Pilot Valves

See page 408 for the pilot valve model numbers to be used.

List of Seals and Pilot Valves

(S-)DSHG-04-∗∗∗-∗-52/5290

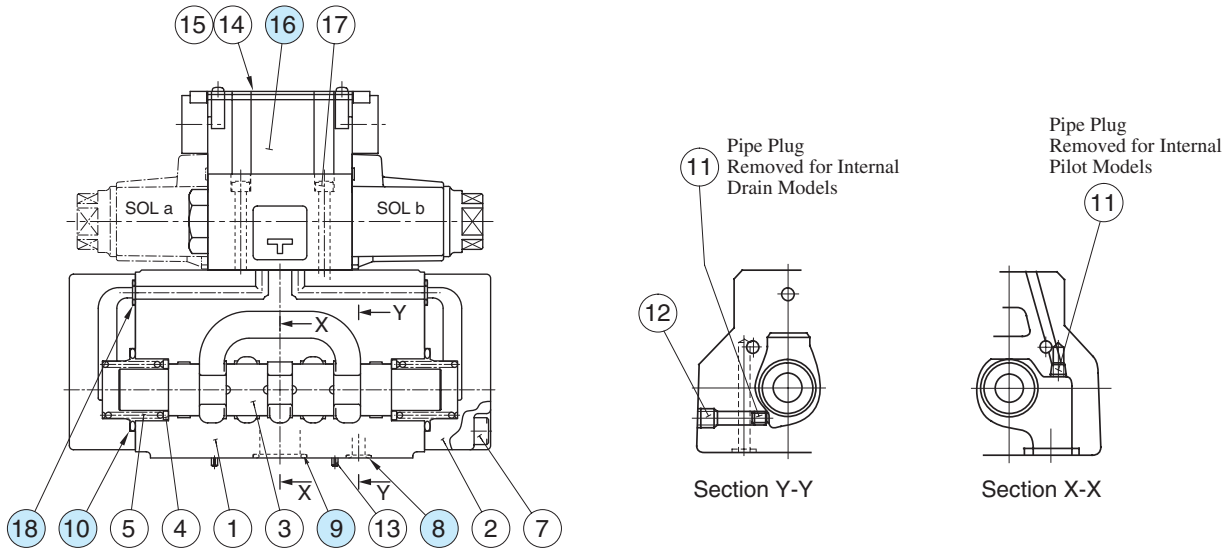

(S-)DSHG-06-∗∗∗-∗-53/5390
(S-)DSHG-10-∗∗∗-∗-43/4390

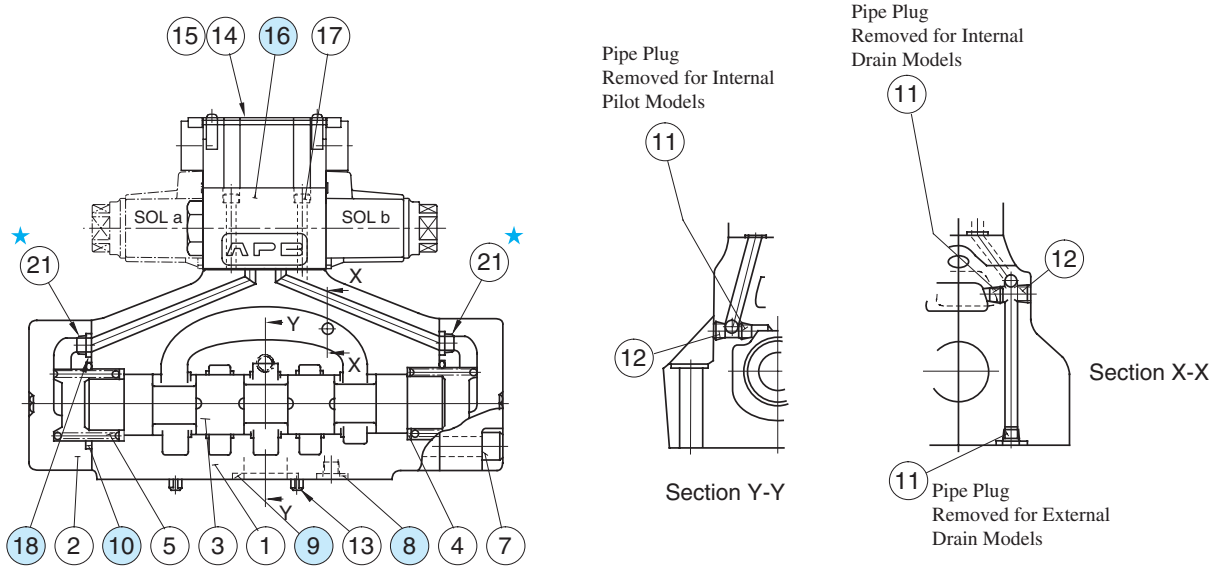

Note: Item ㉑ orifice marked ★ is applicable to pressure centred models (3H∗) with pilot pressure more than 10 MPa (1450 PSI).

List of Seals

Item	Name	Part Numbers			Qty.
		(S-)DSHG-04	(S-)DSHG-06	(S-)DSHG-10	
8	O-Ring	SO-NB-P9	SO-NB-P14	SO-NB-P20	2
9		SO-NB-P22	SO-NB-P30	SO-NB-P42	4
10		SO-NB-P34	SO-NB-P40	SO-NB-P65	2
18		SO-NB-P9	SO-NB-P10	SO-NB-P14	2

Note: When ordering the o-rings, please specify the seal kit number listed in page 408. In addition to the above o-rings, o-rings for pilot valve is included in the seal kit.
For the detail of the pilot valve o-rings, see page 359.

Pilot Valves

See page 408 for the pilot valve model numbers to be used.

List of Seal Kits and Pilot Valves

Valve Model Numbers	Pilot Valve Model Numbers	Seal Kit Numbers
DSHG-01-3C∗-★-▲-14 DSHG-01-3C∗-★-N-1480 DSHG-01-3C∗-★-▲-1490	DSG-01-3C4-★-▲-70 DSG-01-3C4-★-N-70 DSG-01-3C4-★-▲-7090	KS-DSHG-01-▲-14 (For Internal Pilot-Internal Drain)
DSHG-01-2B∗-★-▲-14 DSHG-01-2B∗-★-N-1480 DSHG-01-2B∗-★-▲-1490	DSG-01-2B2-★-▲-70-L DSG-01-2B2-★-N-70-L DSG-01-2B2-★-▲-7090-L	KS-DSHG-01-ET-▲-14 (Except for Internal Pilot-Internal Drain)
DSHG-03-3C∗-★-▲-14 DSHG-03-3C∗-★-▲-1490	DSG-01-3C4-★-▲-70 DSG-01-3C4-★-▲-7090	KS-DSHG-03-▲-14
DSHG-03-2B∗-★-▲-14 DSHG-03-2B∗-★-▲-1490	DSG-01-2B2-★-▲-70 DSG-01-2B2-★-▲-7090	
DSHG-03-2N∗-★-▲-14 DSHG-03-2N∗-★-▲-1490	DSG-01-2D2-★-▲-70 DSG-01-2D2-★-▲-7090	
(S-)DSHG-04-3C∗-★-▲-52 (S-)DSHG-04-3C∗-★-▲-5290	DSG-01-3C4-★-▲-70 DSG-01-3C4-★-▲-7090	KS-DSHG-04-▲-52
(S-)DSHG-04-2B∗-★-▲-52 (S-)DSHG-04-2B∗-★-▲-5290	DSG-01-2B2-★-▲-70 DSG-01-2B2-★-▲-7090	
(S-)DSHG-04-2N∗-★-▲-52 (S-)DSHG-04-2N∗-★-▲-5290	DSG-01-2D2-★-▲-70 DSG-01-2D2-★-▲-7090	
(S-)DSHG-06-3C∗-★-▲-53 (S-)DSHG-06-3C∗-★-▲-5390	DSG-01-3C4-★-▲-70 DSG-01-3C4-★-▲-7090	KS-DSHG-06-▲-53
(S-)DSHG-06-2B∗-★-▲-53 (S-)DSHG-06-2B∗-★-▲-5390	DSG-01-2B2-★-▲-70-L DSG-01-2B2-★-▲-7090-L	
(S-)DSHG-06-2N∗-★-▲-53 (S-)DSHG-06-2N∗-★-▲-5390	DSG-01-2D2-★-▲-70 DSG-01-2D2-★-▲-7090	
(S-)DSHG-10-3C∗-★-▲-43 (S-)DSHG-10-3C∗-★-▲-4390	DSG-01-3C4-★-▲-70 DSG-01-3C4-★-▲-7090	KS-DSHG-10-▲-43
(S-)DSHG-10-2B∗-★-▲-43 (S-)DSHG-10-2B∗-★-▲-4390	DSG-01-2B2-★-▲-70-L DSG-01-2B2-★-▲-7090-L	
(S-)DSHG-10-2N∗-★-▲-43 (S-)DSHG-10-2N∗-★-▲-4390	DSG-01-2D2-★-▲-70 DSG-01-2D2-★-▲-7090	

Notes) 1: Fill coil type (a symbol representing current/voltage) in section marked ★. Likewise, in section marked ▲, fill a symbol representing the type of electrical conduit connection (None: Terminal Box Type, N: Plug-in Connector Type).
2: For the details of the pilot valves, see page 359 to 360.

"G" Series Shockless Type Solenoid Operated / Solenoid Controlled Pilot Operated Directional Valves

The G-Series Solenoid Operated Directional Valves incorporate electronic circuits o enable adjustment of the spool shifting time.
A special spool shape that minimises shock is used, shocks caused by the actuator starting and stopping, as well as vibration due to oil hammering.
The shifting time of conventional Solenoid Operated, Shockless, and Directional Valves is constant and cannot be adjusted.
As the shifting time of the G-Series valves can be adjusted, it can be set at an optimal level to minimise shocks to the machine.

G-DSG-01

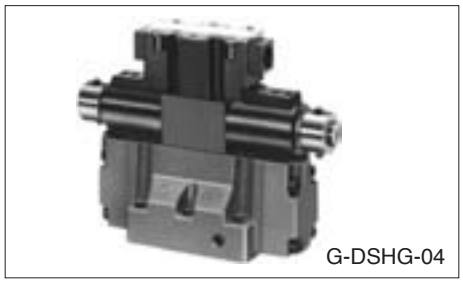
G-DSHG-04

1 Reduces oil hammering during spool changeover.

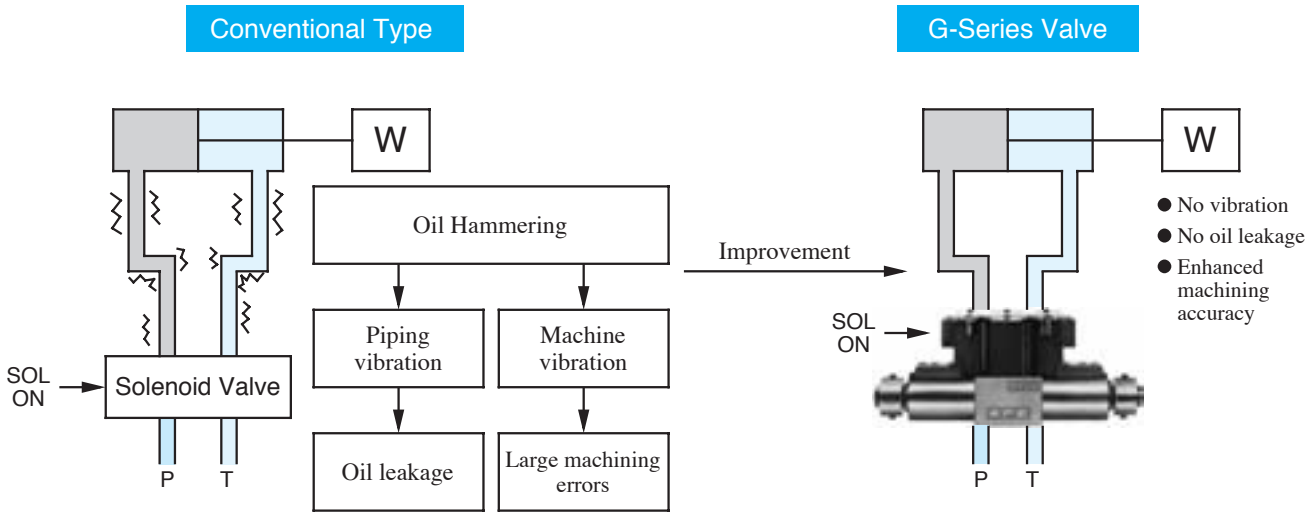

2 Reduces shock caused by acceleration and deceleration

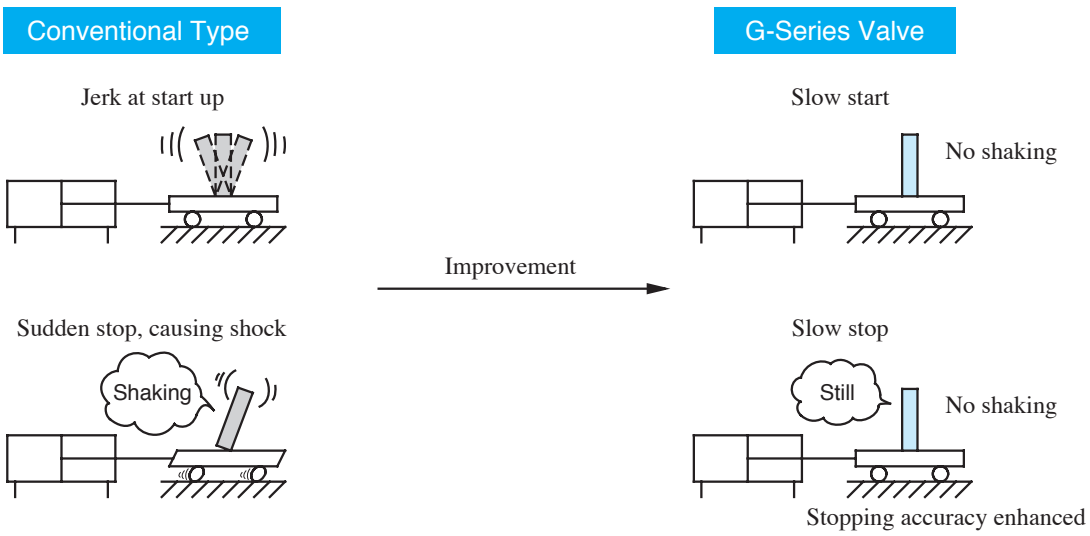

System Diagram (Example of sink type wiring)

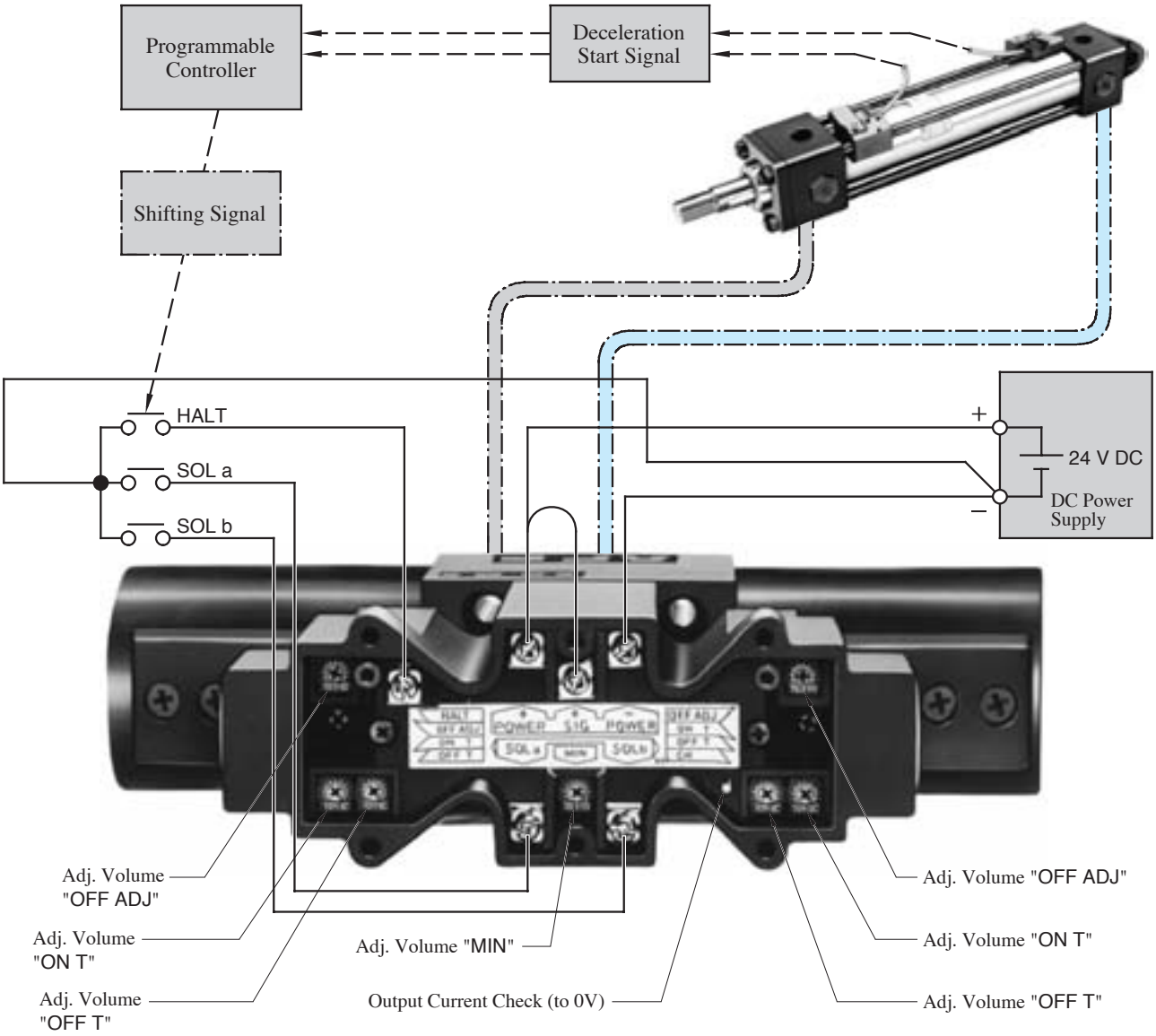

Relationships between SOL signals and flow patterns

● Without **HALT** functions

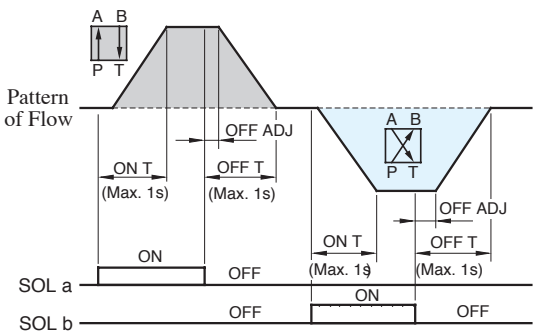

● With **HALT** functions

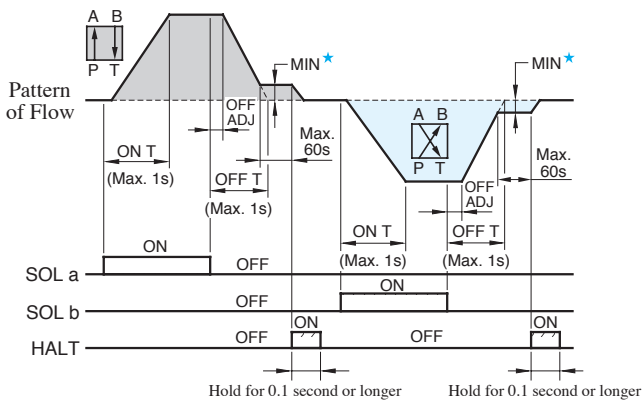

★The minimum adjustment volume is common for SOL a and b, and it is not possible to set a different volume for each SOL a and b individually. If the HALT functions are not used, set the minimum adjustment volume to zero.

Instructions

- **Adjustment of maximum flow rate**

The G-Series Solenoid Operated Directional Valves cannot be adjusted for maximum flow rates.
To adjust maximum flow rates, use flow control valves.
In G-series solenoid controlled pilot operated directional valves (G-DSHG-04/06), the maximum flow rate can be adjusted by use of the valve with stroke adjustment screw of optional extra.

(Example)

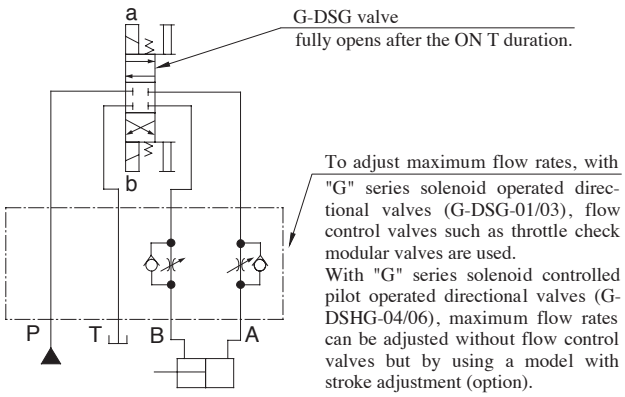

- **How to use HALT functions**

The HALT functions are used to drive the actuator at a low speed to the stop position while keeping a slight flow after OFF T.
A flow rate (min. flow rate) during a low-speed operation can be set with the minimum adjusting volume (The minimum adjusting volume is common for SOL a and b. Individual setting is not possible for SOL a and b.) When HALT signal is on, the min. flow rate becomes zero and the actuator stops. Here, take care to keep the HALT signal on for longer than 0.1 second. The min. flow rate gets to "0" after about 60 seconds following the OFF T. If the HALT functions are not used, set the minimum adjusting volume to zero.
The HALT functions are not applicable to the spool function "2B7".

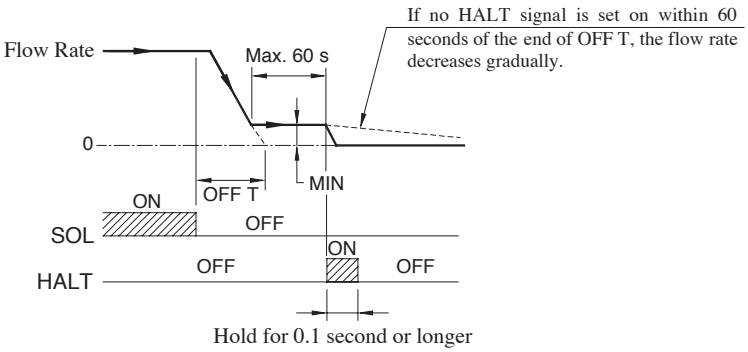

"G" Series Shockless Type Solenoid Operated Directional Valves

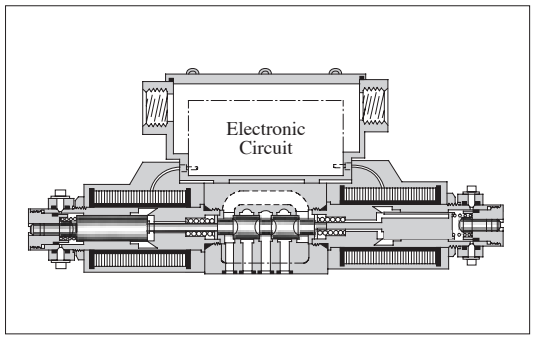

Specifications

Descriptions \ Model Numbers		G-DSG-01-∗∗∗-∗-50/5090	G-DSG-03-∗∗∗-∗-50/5090
Max. Flow ★1	L/min (U.S.GPM)	10 (2.6), 20 (5.3), 30 (7.9), 40 (10.6)	40 (10.6), 60 (15.9), 80 (21.1)
Max. Operating Pres. ★2	MPa (PSI)	25 (3630)	25 (3630)
Max. T-Line Back Pres.	MPa (PSI)	16 (2320)	16 (2320)
Electric Power Supply	Voltage	24 V DC (21 - 28 V DC Included Ripple): Use a stable power supply	
	Input Power at 24V	36 W	36 W
Shifting signal, low speed operation halt signal (can be used in common with electric power supply).	Voltage	5 - 48 V DC (Use a stable power supply)	
	Current	Constant at 10 mA (A constant-current circuit is used)	
	Input interface	Sink Type, Source Type	
Shifting time range (for ON and OFF)		0.1 - 1 s	0.3 - 1 s
Low speed operation flow rate (min. flow rate) range (for SOL a and b)	L/min (U.S.GPM)	0.5 - 5 (.13 - 1.3)	1 - 10 (.26 - 2.6)
Low speed operation flow rate (min. flow rate) hold time		Max. 60 s (After 60 seconds, the flow rate decreases gradually.)	
Ambient Temperature		0 - 50 °C (32 - 122 °F) with circulated air	
Approx. Mass	Single Solenoid	2.1 kg (4.6 lbs.)	5.3 kg (11.7 lbs.)
	Double Solenoid	3.0 kg (6.6 lbs.)	7.5 kg (16.5 lbs.)

★1. The maximum flow rates may vary according to the operating pressure. Refer to Maximum Flow Rates Characteristics on pages 414 and 415 for details.
★2. At pressures more than 21 MPa (3050 PSI), the "shockless effect" is slightly less if compared it with that at 16 MPa (2320 PSI).

Model Number Designation

G-DSG	-01	-10	-2B7	-S	-50	*	-L
Series Number	Valve Size	Metred Flow Capacity	Spool Type	Input Interface	Design Number	Design Standards	Models with Alternate Offset Solenoid
G-DSG: G Series Shockless Type Solenoid Operated Directional Valve, Sub-plate Mounting	**01**	**None**: 40 L/min **10** : 10 L/min **20** : 20 L/min	**3C2** 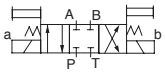 **3C40** 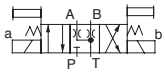	**None**: Sink Type (Standard) **S**: Source Type	**50**	Refer to ★	**L** Applicable only for 2B7 (Omit if not required)
		None: 30 L/min **10** : 10 L/min **20** : 20 L/min	**2B7** 				
	03	**None**: 80 L/min **40** : 40 L/min **60** : 60 L/min	**3C2** 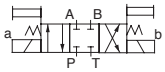 **3C40** 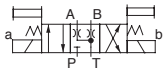		**50**		
		None: 60 L/min **40** : 40 L/min	**2B7** 				

★ Design Standards: None ..... Japanese Standard "JIS" and European Design Standard
90 ..... N. American Design Standard

Sub-plate

Valve Model Numbers	Japanese Standard "JIS"		European Design Standard		N. American Design Standard		Approx. Mass kg (lbs.)
	Sub-plate Model Numbers	Thread Size	Sub-plate Model Numbers	Thread Size	Sub-plate Model Numbers	Thread Size	
G-DSG-01	DSGM-01-31	Rc 1/8	DSGM-01-3180	1/8 BSP.F	DSGM-01-3190	1/8 NPT	0.8 (1.8)
	DSGM-01X-31	Rc 1/4	DSGM-01X-3180	1/4 BSP.F	DSGM-01X-3190	1/4 NPT	0.8 (1.8)
	DSGM-01Y-31	Rc 3/8	—	—	DSGM-01Y-3190	3/8 NPT	0.8 (1.8)
G-DSG-03	DSGM-03-40	Rc 3/8	DSGM-03-2180	3/8 BSP.F	DSGM-03-2190	3/8 NPT	3.0 (6.6)
	DSGM-03X-40	Rc 1/2	DSGM-03X-2180	1/2 BSP.F	DSGM-03X-2190	1/2 NPT	3.0 (6.6)
	DSGM-03Y-40	Rc 3/4	DSGM-03Y-2180	3/4 BSP.F	DSGM-03Y-2190	3/4 NPT	4.7 (10.4)

● Sub-plates are available. Specify the sub-plate model number from the table above. When sub-plates are not used, the mounting surface should have a good machined finish.

Attachment (Mtg. Bolt)

Four socket head cap screws in the table below are included.

Model Numbers	Socket Head Cap Screw (4 pcs.)		
	Japanese Standard "JIS" & European Design Standard	N. American Design Standard	Tightening Torque
G-DSG-01	M5 × 45 Lg.	No.10-24 UNC × 1-3/4 Lg.	5-7 Nm (44-62 in. lbs.)
G-DSG-03	M6 × 35 Lg.	1/4-20 UNC × 1-1/2 Lg.	12-15 Nm (106-133 in. lbs.)

Typical Performance Characteristics of "**G-DSG-01**" at Viscosity 30 mm²/s (141 SSU), Specific Gravity 0.850

Maximum Flow Rate

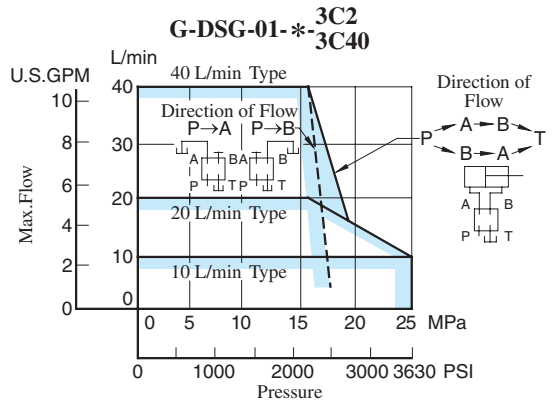

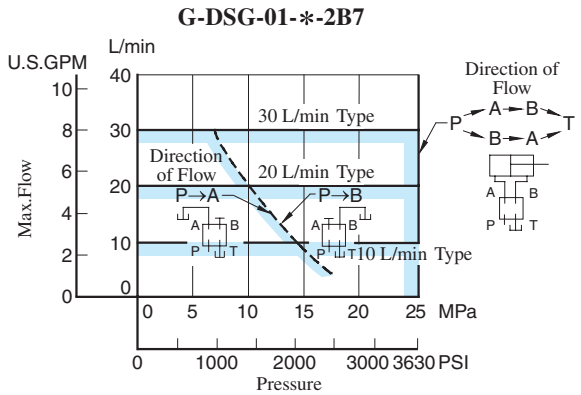

Pressure Drop

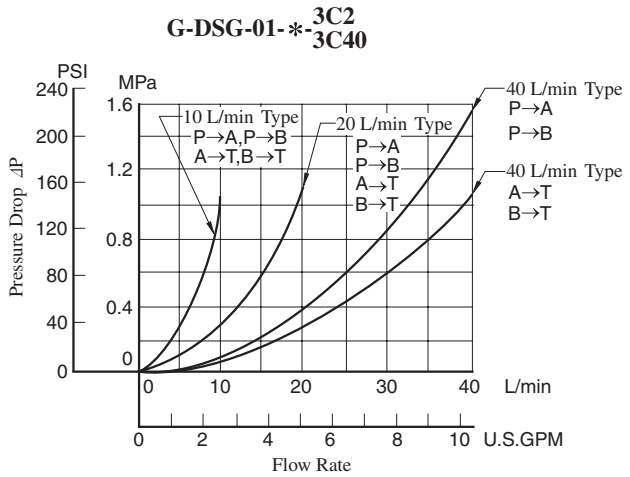

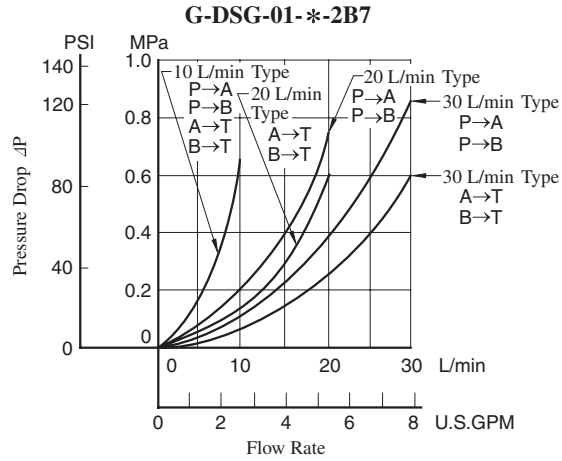

- For any other viscosity, multiply the factors in the table right.
- For any other specific gravity (G'), the pressure drop (⊿P') may be obtained from the formula below.

  ⊿P'=⊿P (G'/0.850)

Viscosity	mm²/s	15	20	30	40	50	60	70	80	90	100
	SSU	77	98	141	186	232	278	324	371	417	464
Factor		0.84	0.91	1.00	1.07	1.14	1.19	1.24	1.28	1.32	1.35

Shifting Characteristics

Supply Pressure : 16 MPa (2320 PSI)
Flow Rate : 30 L/min (7.9 U.S.GPM)

3C2, 3C40

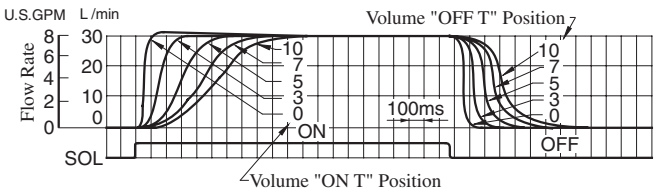

2B7

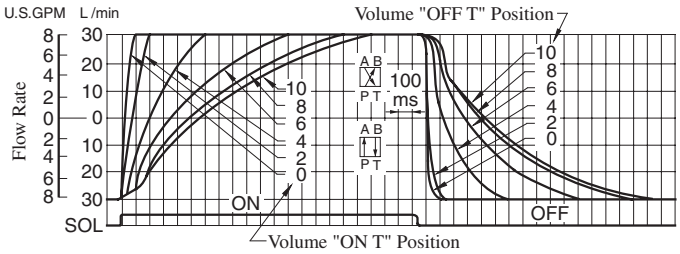

Low Speed Operating Flow Characteristics

Supply Pressure : 16 MPa (2320 PSI)
Flow Rate : 30 L/min (7.9 U.S.GPM)

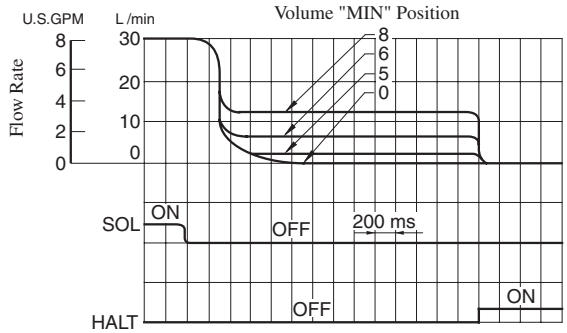

Typical Performance Characteristics of "**G-DSG-03**" at Viscosity 30 mm²/s (141 SSU), Specific Gravity 0.850

Maximum Flow Rate

G-DSG-03-∗-3C2 / 3C40

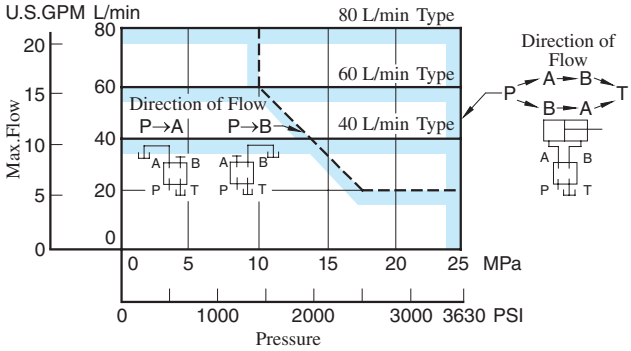

G-DSG-03-∗-2B7

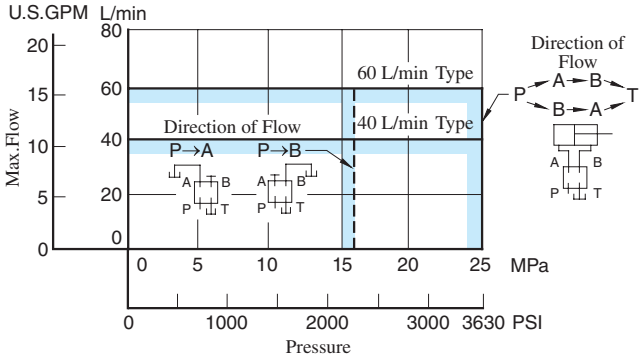

Pressure Drop

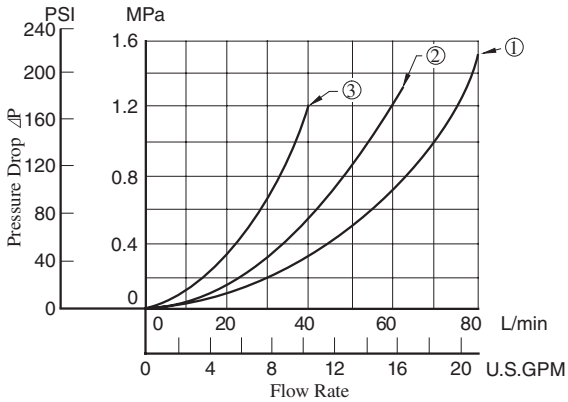

Model Numbers	Pressure Drop Curve Numbers★
G-DSG-03-3C2/3C40	①
G-DSG-03-40-3C2/3C40	③
G-DSG-03-60-3C2/3C40	②
G-DSG-03-2B7	①
G-DSG-03-40-2B7	③

★The numbers of the pressure drop curves are the same for P→A, P→B, A→T and B→T.

- For any other viscosity, multiply the factors in the table right.
- For any other specific gravity (G'), the pressure drop (⊿P') may be obtained from the formula below.

⊿P'=⊿P (G'/0.850)

Viscosity	mm²/s	15	20	30	40	50	60	70	80	90	100
	SSU	77	98	141	186	232	278	324	371	417	464
Factor		0.84	0.91	1.00	1.07	1.14	1.19	1.24	1.28	1.32	1.35

Shifting Characteristics

Supply Pressure : 16 MPa (2320 PSI)
Flow Rate : 60 L/min (15.9 U.S.GPM)

● 3C2, 3C40

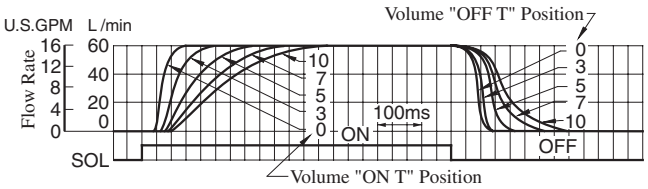

● 2B7

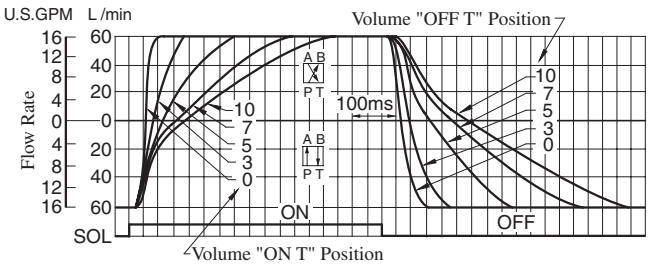

Low Speed Operating Flow Characteristics

Supply Pressure : 16 MPa (2320 PSI)
Flow Rate : 60 L/min (15.9 U.S.GPM)

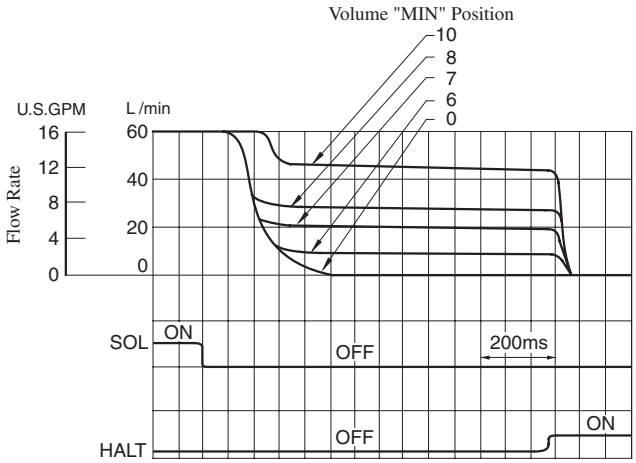

G-DSG-01-∗-3C2/3C40-∗-50/5090

Mounting Surface:
ISO4401-AB-03-4-A

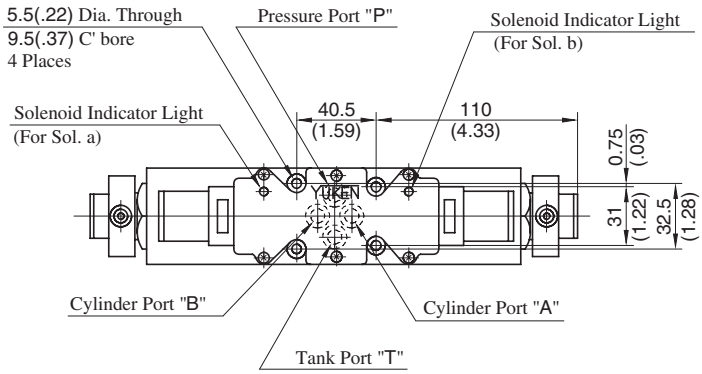

Model Numbers	"C" Thd.
G-DSG-01-∗∗∗-∗-50	G 1/2
G-DSG-01-∗∗∗-∗-5090	1/2 NPT

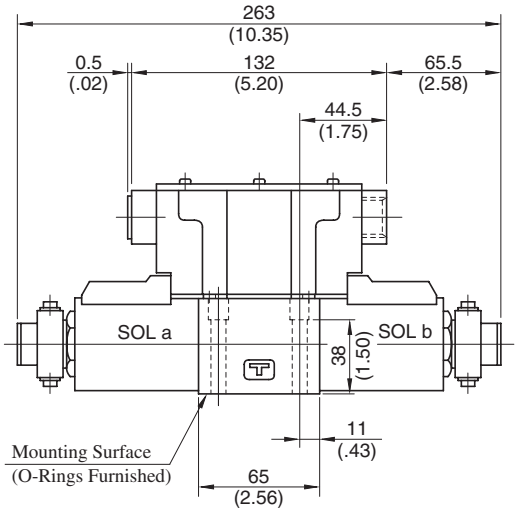

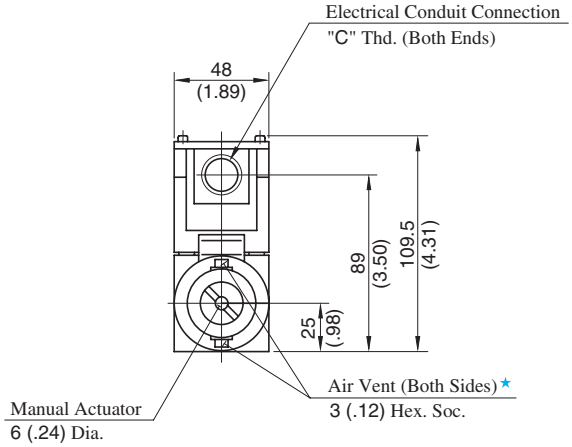

★ Air vent position around valve longitudinal axis can be optionally selected.

Note: For the valve mounting surface dimensions, see the dimensional drawing of the sharable sub-plate in page 356.

DIMENSIONS IN MILLIMETRES (INCHES)

G-DSG-01-∗-2B7-∗-50/5090

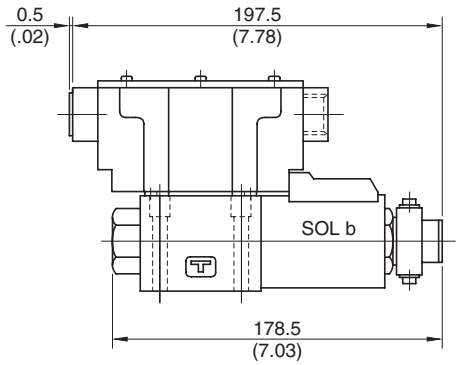

• For other dimensions, refer to the drawing above.

Mounting Surface:
ISO 4401-AC-05-4-A

G-DSG-03-∗-3C2/3C40-∗-50/5090

Model Numbers	"C" Thd.
G-DSG-03-∗∗∗-∗-50	G 1/2
G-DSG-03-∗∗∗-∗-5090	1/2 NPT

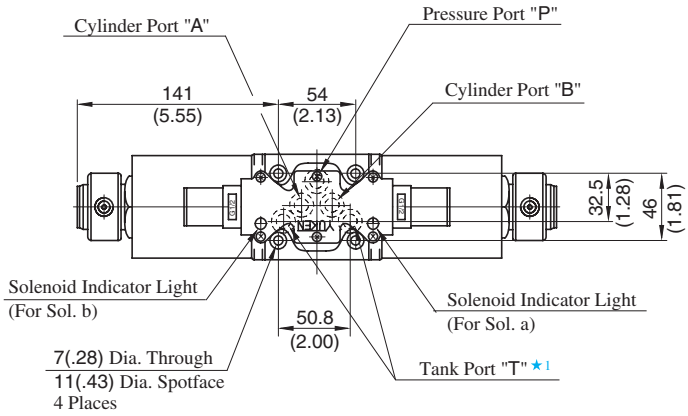

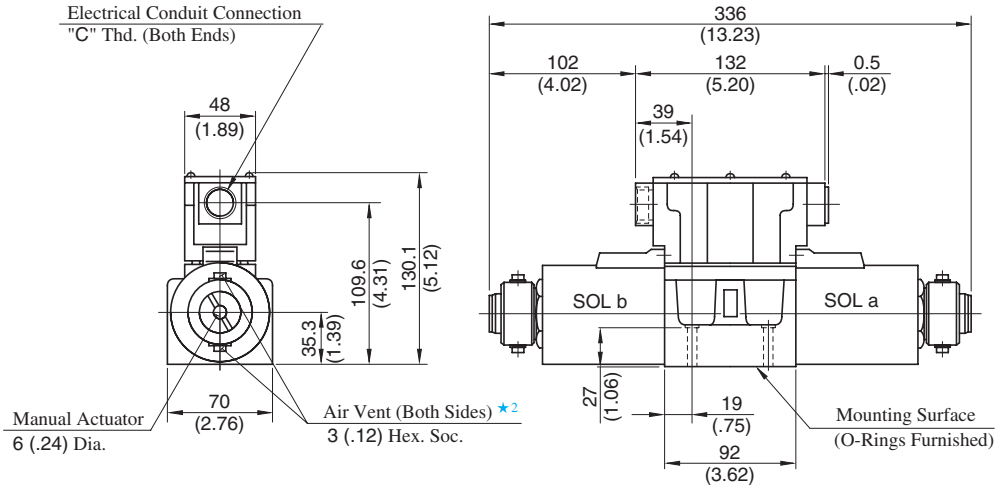

★1. Although the tank port is shown on the left in our sub-plate, either may be used.
★2. Air vent position around valve longitudinal axis can be optionally selected.
Note: For the valve mounting surface dimensions, see the dimensional drawing of the sharable sub-plate in page 373.

DIMENSIONS IN MILLIMETRES (INCHES)

G-DSG-03-∗-2B7-∗-50/5090

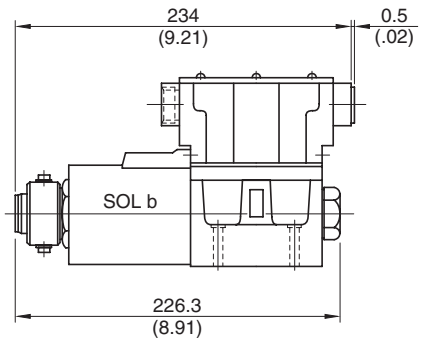

• For other dimensions, refer to the drawing above.

"G" Series Shockless Type Solenoid Controlled Pilot Operated Directional Valves

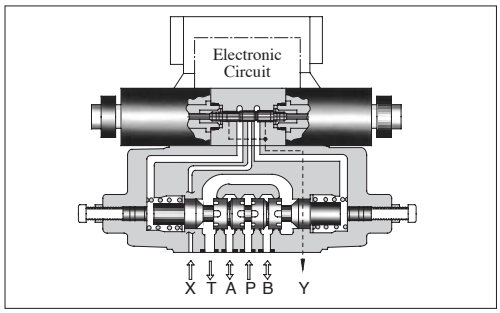

Specifications

Descriptions	Model Numbers	G-DSHG-04-3C∗-∗-∗-∗-50/5090	G-DSHG-06-3C∗-∗-∗-∗-50/5090
Max. Flow	L/min (U.S.GPM)	160 (42.3) ★1	250 (66.1) ★1
Max. Operating Pres.	MPa (PSI)	25 (3630)	25 (3630)
Max. T-Line Back Pres.	MPa (PSI)	16 (2320)	16 (2320)
Max. Drain Line Back Pressure	MPa (PSI)	3 (440)	3 (440)
Max. Pilot Pressure	MPa (PSI)	16 (2320)	16 (2320)
Min. Required Pilot Pres.	MPa (PSI)	1.5 (220) ★2	
Pilot Flow L/min (U.S.GPM)	at Normal	1 (0.3)	1 (0.3)
	at Transition	4 (1.1)	6 (1.6)
Electric Power Supply	Voltage	24 V DC (21 - 28 V DC Included Ripple): Use a stable power supply	
	Input Power at 24V	36 W	36 W
Shifting signal, low speed operation halt signal (can be used in common with electric power supply)	Voltage	5 - 48 V DC (Use a stable power supply)	
	Current	Constant at 10 mA (A constant-current circuit is used)	
	Input interface	Sink Type, Source Type	
Shifting time range (for ON and OFF)		ON: 0.06 - 1.5 s, OFF: 0.1 - 2 s	ON: 0.1 - 1 s, OFF: 0.2 - 2 s
Low speed operation flow rate (min. flow rate) range (for SOL a and b)	L/min (U.S.GPM)	5 - 20 (1.3 - 5.3)	10 - 30 (2.6 - 7.9)
Low speed operation flow rate (min. flow rate) hold time		Max. 60 s (After 60 seconds, the flow rate decreases gradually.)	
Ambient Temperature		0 - 50 °C (32 - 122 °F) with circulated air	
Approx. Mass		12 kg (26.5 lbs.)	15 kg (33.1 lbs.)

★1. The maximum flow rate is constant irrespective of the working pressure.
★2. Be sure that the difference between pilot pressure and drain port back pressure is larger than the minimum pilot pressure.

Model Number Designation

G-DSHG	-04	-3C2	-E	-R2	-S	-50	*
Series Number	Valve Size	Spool Type	Pilot Connection	Spool Control Modification (Omit if not required)	Input Interface	Design Number	Design Standards
G-DSHG: G Series Shockless Type Solenoid Controlled Pilot Operated Directional Valve, Sub-plate Mounting	**04**	**3C2** 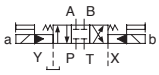	**None**: Internal Pilot	**R2**: With Stroke Adjustment, Both Ends	**None**: Sink Type (Standard)	**50**	Refer to ★
	06	**3C40** 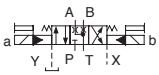	**E**: External Pilot	**RA**: With Stroke Adjustment, Port "A" End **RB**: With Stroke Adjustment, Port "B" End	**S**: Source Type	**50**	

★ Design Standards: None ..... Japanese Standard "JIS" and European Design Standard
90 ..... N. American Design Standard

Sub-plate

Valve Model Numbers	Japanese Standard "JIS"			European Design Standard			N. American Design Standard		
	Sub-plate Model Numbers	Thread Size	Approx. Mass kg (lbs.)	Sub-plate Model Numbers	Thread Size	Approx. Mass kg (lbs.)	Sub-plate Model Numbers	Thread Size	Approx. Mass kg (lbs.)
G-DSHG-04	DHGM-04-20 DHGM-04X-20	Rc 1/2 Rc 3/4	4.4 (9.7) 4.1 (9.0)	DHGM-04-2080 DHGM-04X-2080	1/2 BSP.F 3/4 BSP.F	4.4 (9.7) 4.1 (9.0)	DHGM-04-2090 DHGM-04X-2090	1/2 NPT 3/4 NPT	4.4 (9.7) 4.1 (9.0)
G-DSHG-06	DHGM-06-50 DHGM-06X-50	Rc 3/4 Rc 1	7.4 (16.3) 7.4 (16.3)	DHGM-06-5080 DHGM-06X-5080	3/4 BSP.F 1 BSP.F	8.5 (18.7) 8.5 (18.7)	DHGM-06-5090 DHGM-06X-5090	3/4 NPT 1 NPT	7.4 (16.3) 7.4 (16.3)

● Sub-plates are available. Specify the sub-plate model number from the table above.
When sub-plates are not used, the mounting surface should have a good machined finish.

Attachment (Mtg. Bolts)

Socket head cap screws in the table below are included.

Model Numbers	Socket Head Cap Screw			
	Japanese Standard "JIS" & European Design Standard	N. American Design Standard	Qty.	Tightening Torque Nm (in. lbs.)
G-DSHG-04	M6 × 45 Lg. M10 × 50 Lg.	1/4-20 UNC × 1-3/4 Lg. 3/8-16 UNC × 2 Lg.	2 4	12-15 (106-133) 58-72 (513-637)
G-DSHG-06	M12 × 60 Lg.	1/2-13 UNC × 2-1/2 Lg.	6	100-123 (885-1089)

Hydraulic Fluid: Viscosity 30 mm²/s (141 SSU), Specific Gravity 0.850

Pressure Drop

G-DSHG-04/06-3C2/3C40

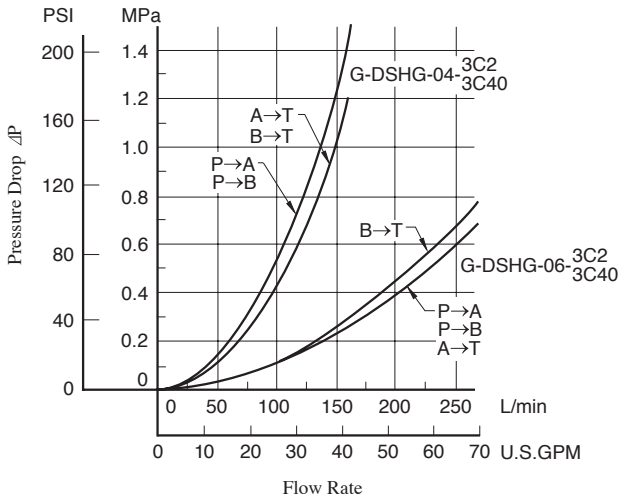

- For any other viscosity, multiply the factors in the table below.

Viscosity	mm²/s	15	20	30	40	50	60	70	80	90	100
	SSU	77	98	141	186	232	278	324	371	417	464
Factor		0.84	0.91	1.00	1.07	1.14	1.19	1.24	1.28	1.32	1.35

- For any other specific gravity (G'), the pressure drop (⊿P') may be obtained from the formula below.
  ⊿P'=⊿P (G'/0.850)

Shifting Characteristics

G-DSHG-04-3C2/3C40

Supply Pressure : 16 MPa (2320 PSI)
Flow Rate : 150 L/min (39.6 U.S.GPM)
Pilot Pressure : 16 MPa (2320 PSI)

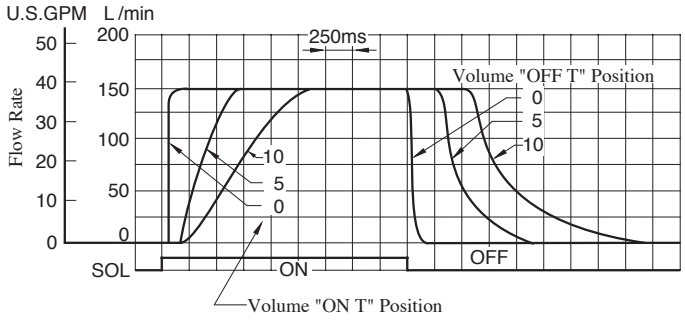

G-DSHG-06-3C2/3C40

Supply Pressure : 16 MPa (2320 PSI)
Flow Rate : 250 L/min (66.1 U.S.GPM)
Pilot Pressure : 16 MPa (2320 PSI)

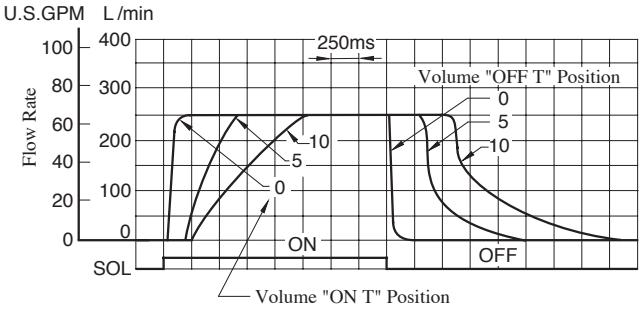

Low Speed Operating Flow Characteristics

G-DSHG-04-3C2/3C40

Supply Pressure : 16 MPa (2320 PSI)
Flow Rate : 150 L/min (39.6 U.S.GPM)
Pilot Pressure : 16 MPa (2320 PSI)

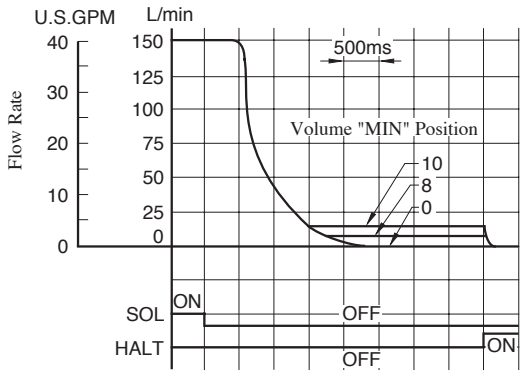

G-DSHG-06-3C2/3C40

Supply Pressure : 16 MPa (2320 PSI)
Flow Rate : 250 L/min (66.1 U.S.GPM)
Pilot Pressure : 16 MPa (2320 PSI)

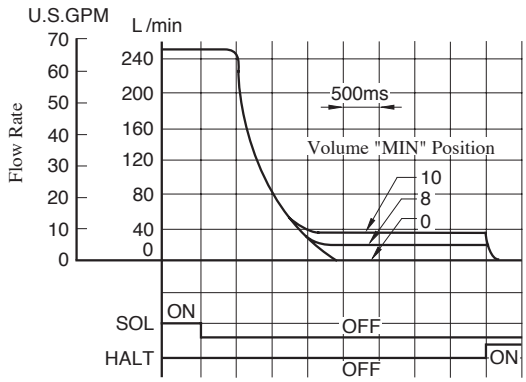

Mounting Surface:
ISO 4401-AD-07-4-A

G-DSHG-04-3C∗-∗-∗-50/5090

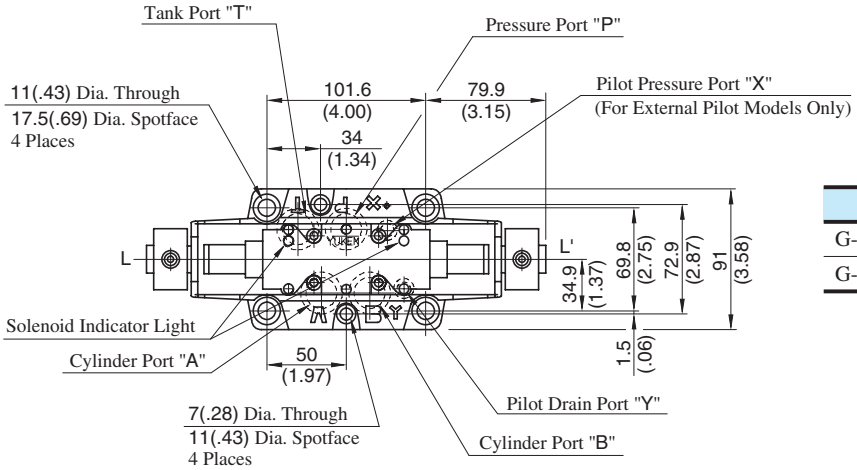

Model Numbers	"C" Thd.
G-DSHG-04-3C∗-∗-∗-50	G 1/2
G-DSHG-04-3C∗-∗-∗-5090	1/2 NPT

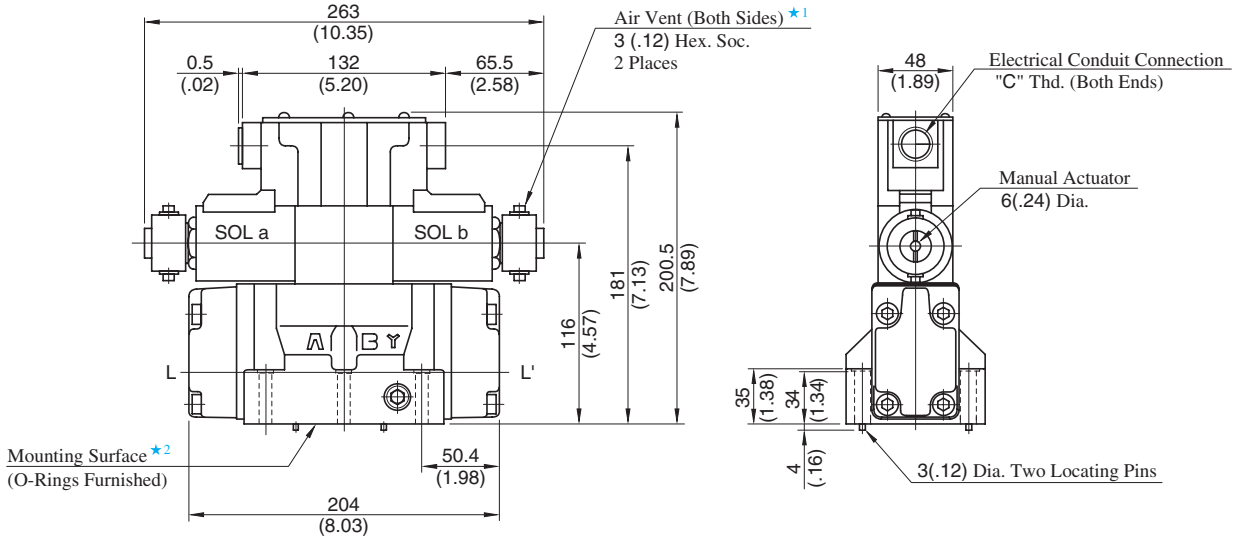

★1. Air vent position around valve longitudinal axis can be optionally selected.
★2. O-rings for ports: SO-NB-P22 for P/A/B/T ports
SO-NB-P9 for X/Y ports
Note: For the valve mounting surface dimensions, see the dimensional drawing of the sharable sub-plate on page 401.

DIMENSIONS IN MILLIMETRES (INCHES)

● Models with Stroke Adjustment (Option)

G-DSHG-04-3C∗-∗-R∗-∗-50/5090

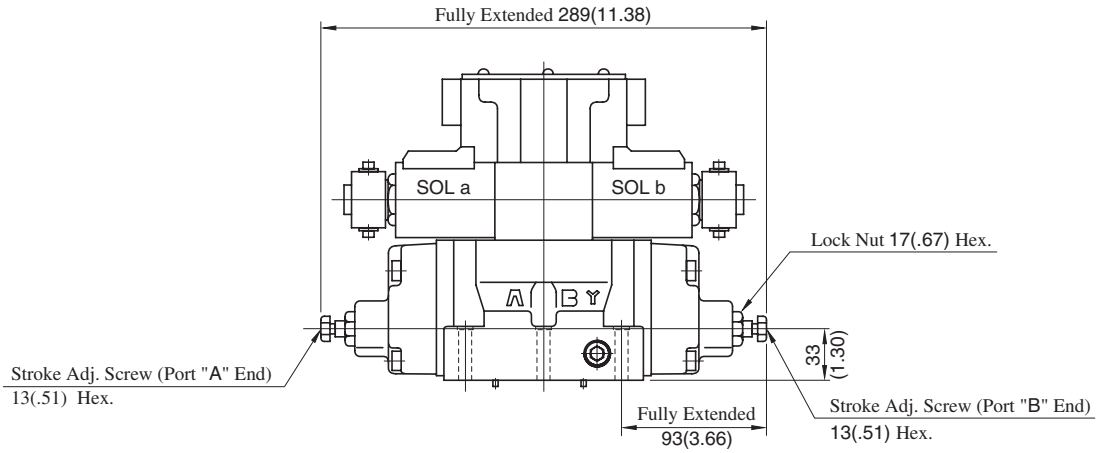

G-DSHG-06-3C∗-∗-∗-50/5090

Mounting Surface:
ISO4401-AE-08-4-A

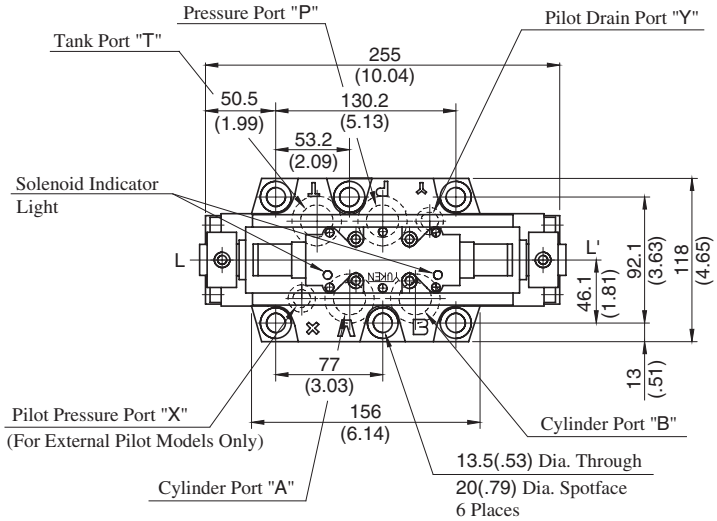

Model Numbers	"C" Thd.
G-DSHG-06-3C∗-∗-∗-50	G 1/2
G-DSHG-06-3C∗-∗-∗-5090	1/2 NPT

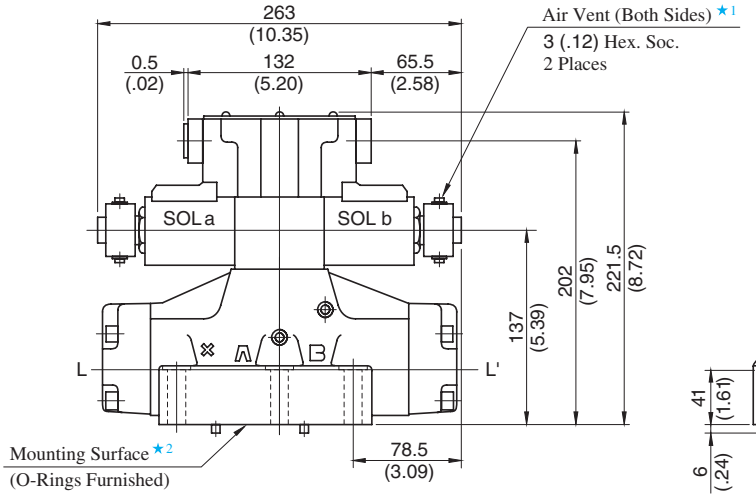

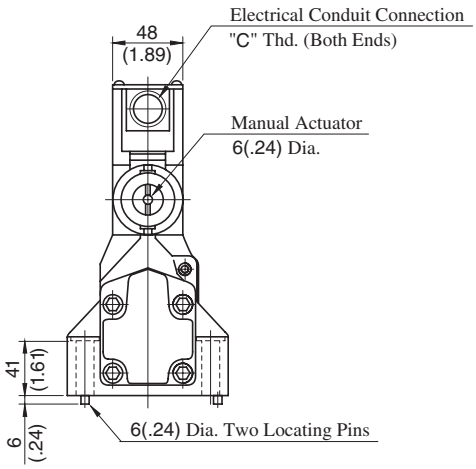

★1. Air vent position around valve longitudinal axis can be optionally selected.
★2. O-rings for ports: SO-NB-P30 for P/A/B/T ports
SO-NB-P14 for X/Y ports
Note: For the valve mounting surface dimensions, see the dimensional drawing of the sharable sub-plate in page 403.

DIMENSIONS IN MILLIMETRES (INCHES)

● Models with Stroke Adjustment (Option)

G-DSHG-06-3C∗-∗-R∗-∗-50/5090

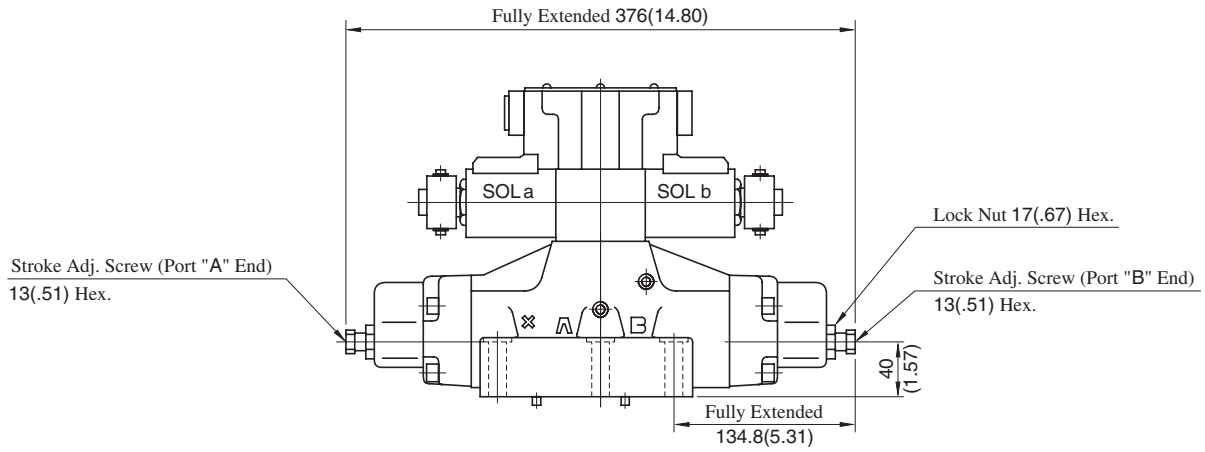

Pilot Operated Directional Valves

These valves perform a change over of spool by hydraulic pilot and shift the direction of oil flow.

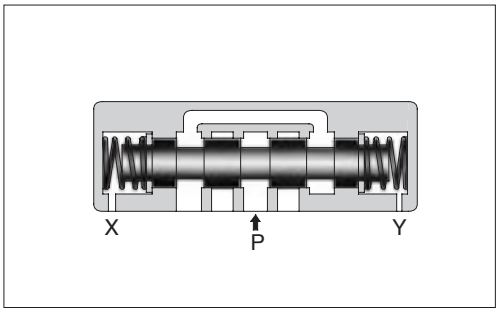

Specifications

Model Numbers	Maximum Flow L/min (U.S.GPM)				Max.Operating Pressure MPa (PSI)	Max. Pilot Pressure MPa (PSI)	Min. Required Pilot Pressure MPa (PSI)	Max. T-Line Back Pressure MPa (PSI)	Approx. Mass kg (lbs.)
	10 MPa (1450 PSI)	16 MPa (2320 PSI)	25 MPa (3630 PSI)	31.5 MPa (4570 PSI)					
DHG-04-3C∗-50∗	300 (79.3)[*1]	300 (79.3)[*1]	300 (79.3)[*1]	300 (79.3)[*1]	31.5 (4570)	25 (3630)	0.8 (120)	21 (3050)	7.4 (16.3)
DHG-04-2N∗-50∗	300 (79.3)	300 (79.3)	300 (79.3)	300 (79.3)					7.4 (16.3)
DHG-04-2B∗-50∗	130 (34.3)	70 (18.5)	70 (18.5)	60 (15.9)					7.8 (17.2)
DHG-06-3C∗-50∗	500 (132)[*2]	500 (132)[*2]	500 (132)[*2]	500 (132)[*2]	31.5 (4570)	25 (3630)	0.8 (120)[*4]	21 (3050)	11.2 (24.7)
DHG-06-2N∗-50∗	500 (132)	500 (132)	500 (132)	500 (132)					11.2 (24.7)
DHG-06-2B∗-50∗	140 (37)	100 (26.4)	90 (23.8)	80 (21.1)					11.7 (25.8)
DHG-06-3H∗-50∗	500 (132)	500 (132)	500 (132)	500 (132)[*2]		21 (3050)	1 (150)		12.0 (26.5)
DHG-10-3C∗-40∗	1100 (291)[*3]	1100 (291)[*3]	1100 (291)[*3]	1100 (291)[*3]	31.5 (4570)	25 (3630)	1 (150)[*4]	21 (3050)	43.8 (96.6)
DHG-10-2N∗-40∗	1100 (291)	1100 (291)	1100 (291)	1100 (291)					43.8 (96.6)
DHG-10-2B∗-40∗	460 (122)	300 (79.3)	220 (58.1)	200 (52.8)					45.6 (101)
DHG-10-3H∗-40∗	1100 (291)	1100 (291)	1100 (291)[*3]	1100 (291)[*3]		21 (3050)	1 (150)		51.6 (114)

Note: Max. flow in the table above represents the value in the flow condition of P→A →B →T (or P→B →A →T) as shown in the circuit diagram right.
In case the valves is used in the condition that eihter A or B port is blocked, the maximum flow differs according to a hydraulic circuit, therefore, please consult us for details.

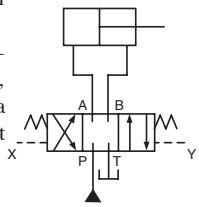

★1. Varies depending on the spool type. For more information, see page 388 for the List of "Standard Model and Maximum Flow" (DSHG-04) for Solenoid Controlled Pilot Operated Directional Valves.
★2. Varies depending on the spool type and pilot pressure. For more information, see page 389 for the List of "Standard Model and Maximum Flow" (DSHG-06) related to the Solenoid Controlled Pilot Operated Directional Valves.
★3. Varies depending on the spool type and pilot pressure. For more information, see page 390 for the List of "Standard Model and Maximum Flow" (DSHG-10) related to the Solenoid Controlled Pilot Operated Directional Valves.
★4. Minimum Pilot Pressure for the models with pilot piston is 1.8 MPa (260 PSI).

Yuken can offer flanged connection valves described below.
Consult us for the details.

Model Numbers	Rated Flow L/min (U.S.GPM)	Max.Operating Pres. MPa (PSI)
DHF-16-∗∗∗-30∗	500 (132)	21 (3050)
DHF-24-∗∗∗-26∗	1200 (317)	
DHF-32-∗∗∗-21∗	2400 (634)	

Pressure Drop

Same as those for Solenoid Controlled Pilot Operated Directional Valves. See pages 392 and 393 for the related information.

Instruction

- In case of Spring Offset Models, directly connect the pilot pressure port "Y" to the reservoir as a drain port.

Model Number Designation

F-	DH	G	-04	-2	B	2	A	-C2	-RA	-H	-50	*
Special Seals	Series Number	Type of Connection	Valve Size	Number of Valve Positions	Spool-Spring Arrangement	Spool Type	Special Two Position Valve	Model with Pilot Choke Valve (Options) ★2	Spool Control Modification (Options) ★2	Built-in Orifice for Pilot Line	Design Number	Design Standard
F: Special Seals for Phosphate ester type fluids (Omit if not required)	**DH**: Pilot Operated Directional Valve	**G**: Sub-plate Mounting	**04**	**3**	**C**: Spring Centred	**2**, **3**	**A**★3, **B**★3 (Omit if not required)	**C2**: With C2 Choke	**R2**: With Stroke Adjustment, Both Ends	—	**50**	Refer to ★5
			06	**2**	**H**: Pressure Centred (Option) ★2	**4**, **40**			**RA**: With Stroke Adjustment, Port A End	**H**: Refer to ★4	**50**	
					N: No-Spring	**5**, **6**			**RB**: With Stroke Adjustment, Port B End			
						60, **7**			**P2**: With Pilot Piston, Both Ends			
						9, **10**			**PA**: With Pilot Piston, Port A End			
			10		**B**: Spring Offset	**11**, **12**			**PB**: With Pilot Piston, Port B End		**40**	
				Refer to ★1								

★1. For various combination, see the List of Valve Types below.
★2. For the option combinations of the Type (Valve Size) and Options, see the List of Options below.
★3. Refer to the column "valves using neutral position and side position" (Special 2-position valve) on page 426.
★4. In spool-spring arrangement "H" (pressure centred models), in case the pilot pressure is more than 10 MPa (150PSI), please specify that the valve should have the built-in orifice to the pilot line.
★5. Design Standards: None..... Japanese Standard "JIS" and European Design Standard
90..... N. American Design Standard

● List of Valve Type

Spool Type	Valve Types			
	Three Positions		Two Positions	
	Spring Centred	Pressure★ Centred	No-Spring	Spring Offset
	Graphic Symbols			
	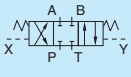	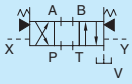	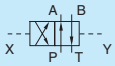	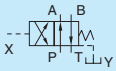
2	3C2	3H2	2N2	2B2
3	3C3	3H3	2N3	2B3
4	3C4	3H4	2N4	2B4
40	3C40	3H40	2N40	2B40
5	3C5	3H5		
6 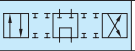	3C6	3H6		
60 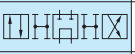	3C60	3H60		
7	3C7	3H7	2N7	2B7
9	3C9	3H9		
10	3C10	3H10		
11	3C11	3H11		
12	3C12	3H12		

★: Pressure Centered Models are not available for the Valve Size of "04".

● List of Options

Model Numbers	Option Code							
	3H*	C2	R2	RA	RB	P2	PA	PB
DHG-04-3C*	×	○	○	○	○	×	×	×
DHG-04-2N*	×	○	○	○	○	×	×	×
DHG-04-2B*	×	○	×	○	×	×	×	×
DHG-06-3C*	×	○	○	○	○	○	○	○
DHG-06-2N*	×	○	○	○	○	○	○	○
DHG-06-2B*	×	○	×	○	×	×	○	×
DHG-06-3H*	○	○	×	×	×	×	×	×
DHG-10-3C*	×	○	○	○	○	○	○	○
DHG-10-2N*	×	○	○	○	○	○	○	○
DHG-10-2B*	×	○	×	○	×	×	○	×
DHG-10-3H*	○	○	×	×	×	×	○	×

Note. ○ Mark: Available
× Mark: Not Available

Sub-plate

Valve Model Numbers	Japanese Standard "JIS"			European Design Standard			N. American Design Standard		
	Sub-plate Model Numbers	Thread Size	Approx. Mass kg (lbs.)	Sub-plate Model Numbers	Thread Size	Approx. Mass kg (lbs.)	Sub-plate Model Numbers	Thread Size	Approx. Mass kg (lbs.)
DHG-04	DHGM-04-20 DHGM-04X-20	Rc 1/2 Rc 3/4	4.4 (9.7) 4.1 (9.0)	DHGM-04-2080 DHGM-04X-2080	1/2 BSP.F 3/4 BSP.F	4.4 (9.7) 4.1 (9.0)	DHGM-04-2090 DHGM-04X-2090	1/2 NPT 3/4 NPT	4.4 (9.7) 4.1 (9.0)
DHG-06	DHGM-06-50 DHGM-06X-50	Rc 3/4 Rc 1	7.4 (16.3) 7.4 (16.3)	DHGM-06-5080 DHGM-06X-5080	3/4 BSP.F 1 BSP.F	8.5 (18.7) 8.5 (18.7)	DHGM-06-5090 DHGM-06X-5090	3/4 NPT 1 NPT	7.4 (16.3) 7.4 (16.3)
DHG-10	DHGM-10-40 DHGM-10X-40	Rc 1-1/4 Rc 1-1/2	21.5 (47.4) 21.5 (47.4)	DHGM-10-4080 DHGM-10X-4080	1-1/4 BSP.F 1-1/2 BSP.F	21.5 (47.4) 21.5 (47.4)	DHGM-10-4090 DHGM-10X-4090	1-1/4 NPT 1-1/2 NPT	21.5 (47.4) 21.5 (47.4)

- Sub-plates are available. Specify the sub-plate model number from the table above.
  When sub-plates are not used, the mounting surface should have a good machined finish.
- Sub-plates are shared with those for Solenoid Controlled Pilot Operated Directional Valves. Refer to pages 401 to 403 for dimensions.

Mounting Bolts

Model Numbers	Socket Head Cap Screw			
	Japanese Standard "JIS" European Design Standard	N. American Desgin Standard	Qty.	Tightening Torque Nm (in. lbs)
DHG-04	M6 × 45 Lg. M10 × 50 Lg.	1/4-20 UNC × 1-3/4 Lg. 3/8-16 UNC × 2 Lg.	2 4	12-15 (106-133) 58-72 (513-637)
DHG-06	M12 × 60 Lg.	1/2-13 UNC × 2-1/2 Lg.	6	100-123 (885-1089)
DHG-10	M20 × 75 Lg.	3/8-16 UNC × 2 Lg.	6	473-585 (4186-5177)

Options

Models with Pilot Choke Adjustment (C2)

When the adjustment screw is turned clockwise, changeover speed of the spool becomes slow. In case of the spring centred valves in particular, making slow of the returning speed of the spool to the neutral position is possible with a C2 choke valve.
These choke valves can be used in combination with valves of spring centred, no spring, spring offset, pressure centred and the valves with stroke adjustment.

Graphic Symbols

Spring Centred Models

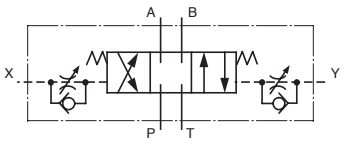

Models with Pilot Piston (P∗)

The valves with a pilot piston can be used when the high speed changeover of the spool is required. However, please note that in case of spring centred valves, there is no change in the returning speed of the spool to the neutral position even with the pilot piston.

Graphic Symbols

Spring Centred Models with Pilot Piston on Both Ends (P2)

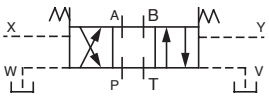

Spring Centred Models with Pilot Piston on Port "A" End (PA)

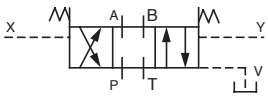

Pressure Centered Models (3H∗)

The pressure centred type can be used when the returning of the spool to the neutral position is required to be done firmly.

Graphic Symbol

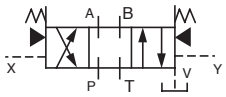

Models with Stroke Adjustment (R∗)

When the adjustment screw is screwed in, the spool stroke becomes short and flow rate reduces

Graphic Symbol

Spring Centred Models with Stroke Adjustment on Both Ends (R2)

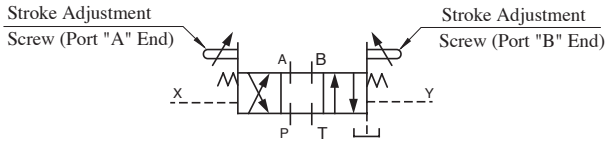

Additional Mass of Options

Add the mass described below to the mass of standard models on page 423 if options are required.

kg (lbs.)

Model Numbers	With Pilot Choke Valve	With Pilot Piston		With Stroke Adjustment	
		P2	PA PB	R2	RA RB
DHG-04	0.65 (1.4)	—	—	1.0 (2.2)	0.5 (1.1)
DHG-06	0.65 (1.4)	1.0 (2.2)	0.5 (1.1)	1.2 (2.6)	0.6 (1.3)
DHG-10	0.65 (1.4)	3.6(7.9)	1.8 (4.0)	3.7 (8.2)	1.85 (4.1)

Valves Using Neutral Position and Side Position (Special Two Position Valve)

In addition to the standard two positions valves (2B∗), the following two types of two positions valves are available: valves with neutral position and pilot Y pressure position (2B∗ A), valves with neutral position and pilot X pressure position (2B ∗ B).

Model Numbers	Graphic Symbols
04 DHG-06-2B∗A 10	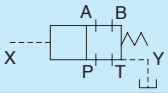
DHG-∗-2B2A	
DHG-∗-2B3A	
DHG-∗-2B4A	
DHG-∗-2B40A	
DHG-∗-2B5A	
DHG-∗-2B6A	
DHG-∗-2B60A	
DHG-∗-2B7A	
DHG-∗-2B9A	
DHG-∗-2B10A	
DHG-∗-2B11A	
DHG-∗-2B12A	

Model Numbers	Graphic Symbols
04 DHG-06-2B∗B 10	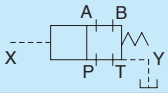
DHG-∗-2B2B	
DHG-∗-2B3B	
DHG-∗-2B4B	
DHG-∗-2B40B	
DHG-∗-2B5B	
DHG-∗-2B6B	
DHG-∗-2B60B	
DHG-∗-2B7B	
DHG-∗-2B9B	
DHG-∗-2B10B	
DHG-∗-2B11B	
DHG-∗-2B12B	

DHG-04-∗∗∗-50/5090

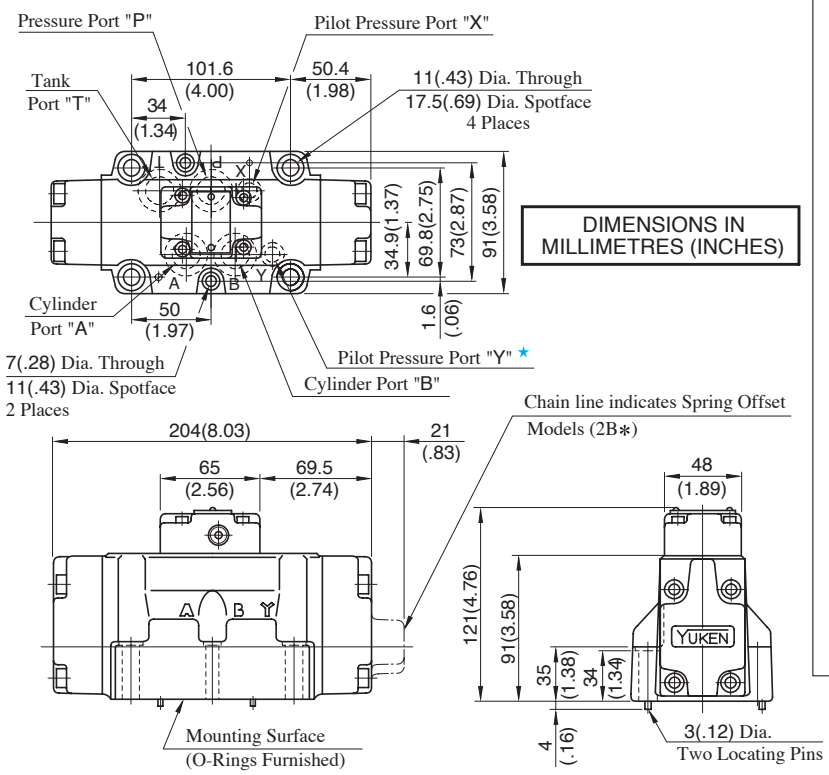

DIMENSIONS IN MILLIMETRES (INCHES)

Note: For the valve mounting surface dimensions, see the dimensional drawing of the sharable sub-plate on page 401.

Mounting Surface: ISO 4401-AD-07-4-A

Options

- **Models with Pilot Choke Valve**
  DHG-04-∗∗∗-C2

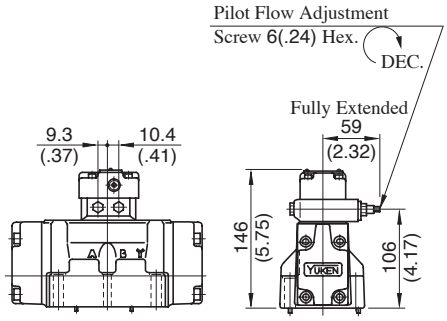

- **Models with Stroke Adj. (R∗)**
  Outside dimensions are the same as those of the main valve of Solenoid Controlled Pilot Operated Directional Valves (DSHG-04). See page 405.

★For Spring Offset Models (2B∗, 2B∗A/B), it functions as drain port. When that model is used, directly connect it to the reservoir.

DHG-06-∗∗∗-50/5090

Mounting surface: ISO 4401-AE-08-4-A

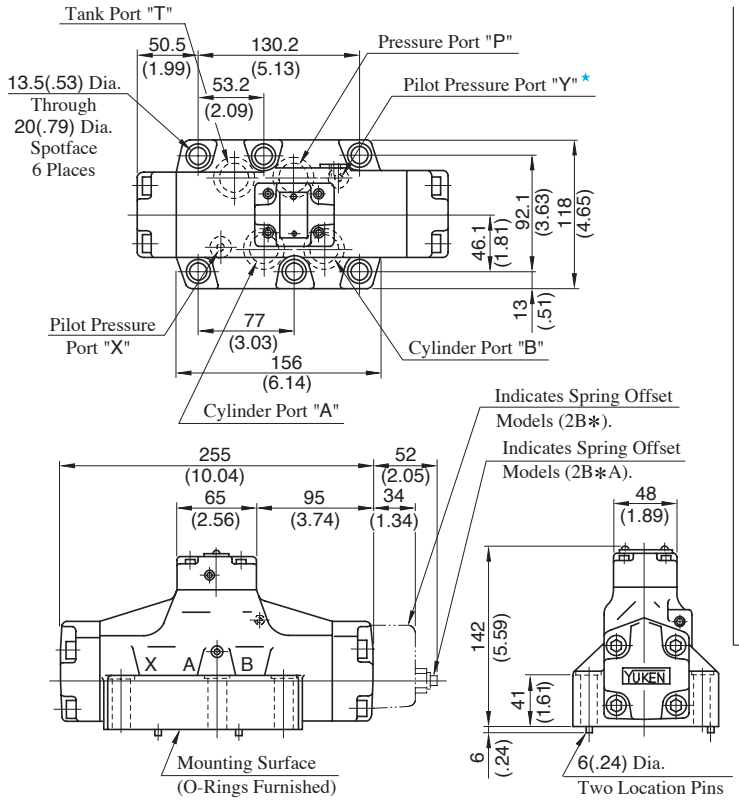

Note: For the valve mounting surface dimensions, see the dimensional drawing of the sharable sub-plate in page 402.

Options

- **Models with Pilot Choke Valve**
  DHG-06-∗∗∗-C2

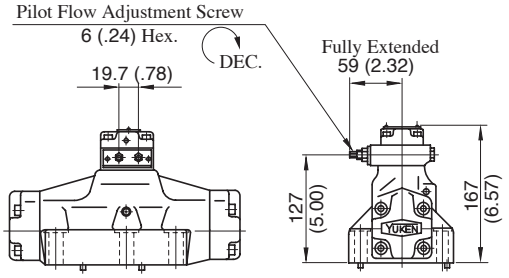

- **Pressure Centred Models (3H∗)**
- **Models with Stroke Adjustment (R∗)**
- **Models with Pilot Piston (P∗)**

The outside dimensions of the above options are the same as those of the main valve of Solenoid Controlled Pilot Operated Directional Valve (DSHG-06). See page 405.

★ In case of Spring Offset Model (2B∗, 2B∗$^{A}_{B}$), it functions as a drain port. When that model is used, directly connect it to the reservoir.

DIMENSIONS IN MILLIMETRES (INCHES)

DHG-10-∗∗∗-40/4090

Mounting surface: ISO 4401-AF-10-4-A

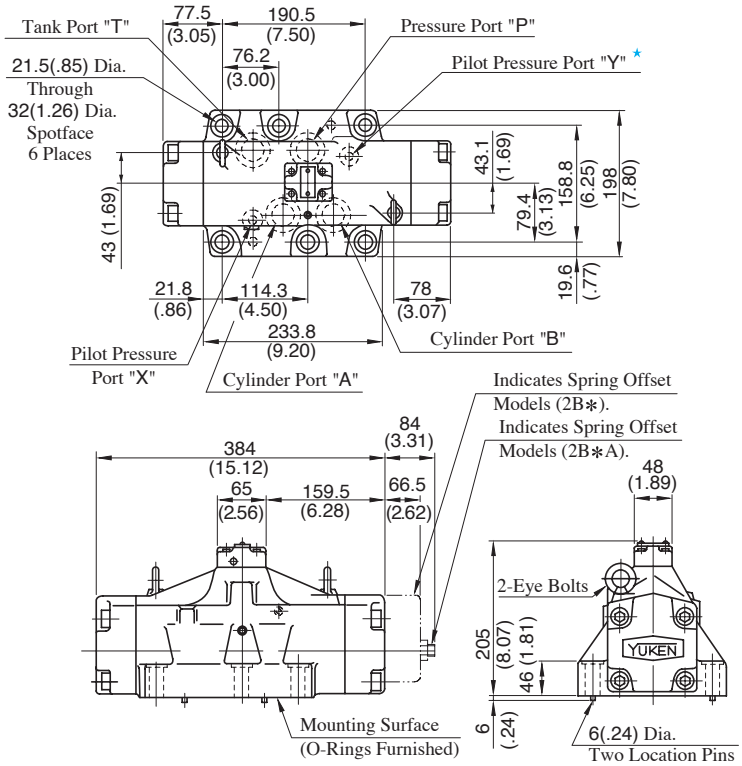

Note: For the valve mounting surface dimensions, see the dimensional drawing of the sharable sub-plate in page 403.

Options

- **Models with Pilot Choke Valve**
  DHG-10-∗∗∗-C2

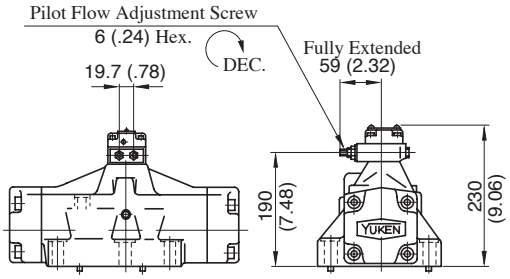

- **Pressure Centred Models (3H∗)**
- **Models with Stroke Adjustment (R∗)**
- **Models with Pilot Piston (P∗)**

The outside dimensions of the above options are the same as those of the main valve of Solenoid Controlled Pilot Operated Directional Valves (DSHG-10). See page 405.

★ In case of Spring Offset Model (2B∗, 2B∗$^{A}_{B}$), in functions as a drain port. When that model is used, directly connect it to the reservoir.

List of Seals

DHG-04-∗∗∗-50/5090
DHG-06-∗∗∗-50/5090
DHG-10-∗∗∗-40/4090

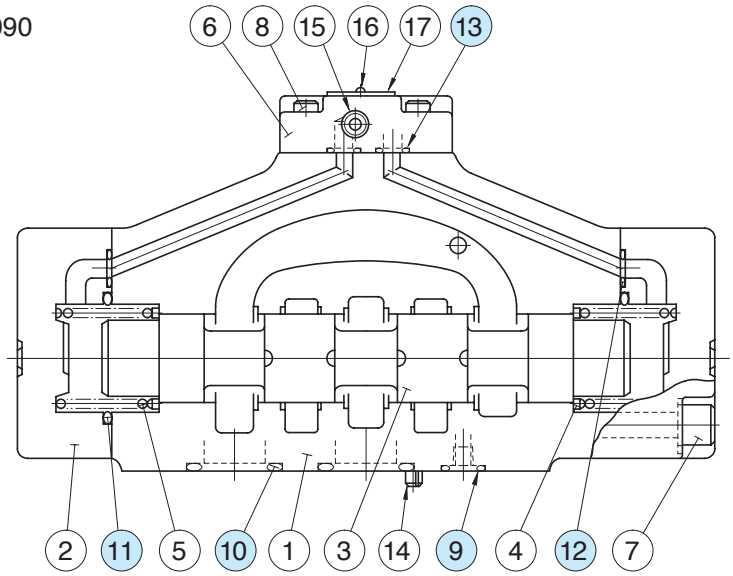

Item	Name of Parts	Part Numbers			Qty
		DHG-04	DHG-06	DHG-10	
9	O-Ring	SO-NB-P9	SO-NB-P14	SO-NB-P20	2
10	O-Ring	SO-NB-P22	SO-NB-P30	SO-NB-P42	4
11	O-Ring	SO-NB-P34	SO-NB-P40	SO-NB-G65	2
12	O-Ring	SO-NB-P9	SO-NB-P10	SO-NB-P14	2
13	O-Ring	SO-NB-P9	SO-NB-P9	SO-NB-P9	4

Note: When ordering the o-rings, please specify the seal kit number from the table below.

Valve Model Numbers	Seal Kit Numbers
DHG-04-∗∗∗-50/5090	KS-DHG-04-50
DHG-06-∗∗∗-50/5090	KS-DHG-06-50
DHG-10-∗∗∗-40/4090	KS-DHG-10-40

Manually Operated Directional Valves

These valves may be used to manually shift the spool position and change the direction of oil flow.

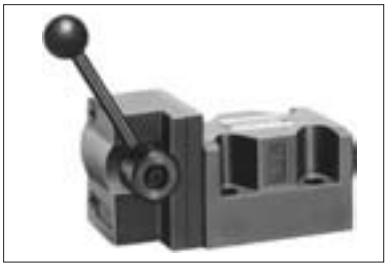

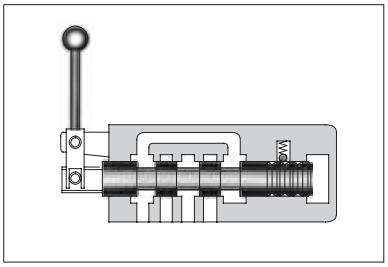

Specifications

	Model Numbers	Maximum Flow L/min (U.S.GPM) 7 MPa (1020 PSI)	14 MPa (2030 PSI)	21 MPa (3050 PSI)	31.5 MPa (4570 PSI)	Max.Operating Pressure MPa (PSI)	Max. T-Line Back Pressure MPa (PSI)	Approx. Mass kg (lbs.)
Threaded Connections	DMT-03-3C∗-50∗	100 (26.4)★1	100 (26.4)★1	100 (26.4)★1	—	25 (3630)	16 (2320)	5.0 (11.0)
	DMT-03-3D∗-50∗	100 (26.4)	100 (26.4)	100 (26.4)	—			
	DMT-03-2D∗-50∗	100 (26.4)	100 (26.4)	100 (26.4)	—			
	DMT-03-2B∗-50∗	100 (26.4)★1	100 (26.4)★1	100 (26.4)★1	—			
	DMT-06∗-3C∗-30∗	300 {200}★2 (79.3 {52.8})	300 {120}★2 (79.3 {31.7})	300 {100}★2 (79.3 {26.4})	—	21 (3050)	At time spool shift is required: 7 (1020) At time spool shift is not required: 21 (3050)	12.9 (28.5)
	DMT-06∗-3D∗-30∗	300 (79.3)	300 (79.3)	300 (79.3)	—			
	DMT-06∗-2D∗-30∗	300 (79.3)	300 (79.3)	300 (79.3)	—			
	DMT-06∗-2B∗-30∗	200 (52.8)	120 (31.7)	100 (26.4)	—			
	DMT-10∗-3C∗-30∗	500 {315}★2 (132 {83.2})	500 {315}★2 (132 {83.2})	500 {315}★2 (132 {83.2})	—	21 (3050)	At time spool shift is required: 7 (1020) At time spool shift is not required: 21 (3050)	22 (48.5)
	DMT-10∗-3D∗-30∗	500 (132)	500 (132)	500 (132)				
	DMT-10∗-2D∗-30∗	500 (132)	500 (132)	500 (132)				
	DMT-10∗-2B∗-30∗	315 (83.2)	315 (83.2)	315 (83.2)				
Sub-Plate Mounting	DMG-01-3C∗-10∗	35 (9.2)	35 (9.2)	35 (9.2)	—	25 (3630)	14 (2030)★5	1.8 (4.0)
	DMG-01-3D∗-10∗							
	DMG-01-2D∗-10∗							
	DMG-01-2B∗-10∗							
	DMG-03-3C∗-50∗	100 (26.4)★1	100 (26.4)★1	100 (26.4)★1	—	25 (3630)	16 (2320)	4.0 (8.8)
	DMG-03-3D∗-50∗	100 (26.4)	100 (26.4)	100 (26.4)	—			
	DMG-03-2D∗-50∗	100 (26.4)	100 (26.4)	100 (26.4)	—			
	DMG-03-2B∗-50∗	100 (26.4)★1	100 (26.4)★1	100 (26.4)★1	—			
	DMG-04-3C∗-21∗	200 (52.8)★3	200 (52.8)★3	105 (27.7)★3	—	21 (3050)	21 (3050)★6	7.4 (16.3)
	DMG-04-3D∗-21∗	200 (52.8)	200 (52.8)	200 (52.8)	—			
	DMG-04-2D∗-21∗	200 (52.8)	200 (52.8)	200 (52.8)	—			
	DMG-04-2B∗-21∗	90 (23.8)	60 (15.9)	50 (13.2)	—			7.9 (17.4)
	DMG-06-3C∗-50∗	500 (132)	500 (132)	500 (132)	500 (132)	31.5 (4570)	21 (3050)★6	11.5 (25.4)
	DMG-06-3D∗-50∗	500 (132)	500 (132)	500 (132)	500 (132)			
	DMG-06-2D∗-50∗	500 (132)	500 (132)	500 (132)	500 (132)			
	DMG-06-2B∗-50∗	420 (111)	300 (79.3)	250 (66.1)	200 (52.8)			12 (26.5)
	DMG-10-3C∗-40∗	1100 (291)★4	1100 (291)★4	1100 (291)★4	1100 (291)★4	31.5 (4570)	21 (3050)★6	48.2 (106)
	DMG-10-3D∗-40∗	1100 (291)	1100 (291)	1100 (291)	1100 (291)			
	DMG-10-2D∗-40∗	1100 (291)	1100 (291)	1100 (291)	1100 (291)			
	DMG-10-2B∗-40∗	670 (177)	350 (92.5)	260 (68.7)	200 (52.8)			50 (110)

Note: The maximum flow means the limited flow without inducing any abnormality to the operation (changeover) of the valve. For details, please refer to the "List of Standard Models and Maximum Flow" on pages 386 to 390.

★ 1. Varies depending on the spool type. For details, see the "List of Standard Model and Maximum Flows" for DSG-03 Series Solenoid Operated Directional Valves (page 364 and 366 at 50 Hz rated voltage).

★ 2. The figures in parentheses indicate Max. flow for 3C3,3C5, 3C6 and 3C60.

★ 3. Varies depending on the spool type. For the details, see the table in the following page.

★ 4. Varies depending on the spool type. Same as DSHG-10 (at pilot pressure of 1.5 MPa (220 PSI). See page 390.

★ 5. Lever operating torque varies depends on the T-line back pressure. See the right-hand figure.

★ 6. If the T-Line back pressure exceeds 7 MPa (1020 PSI), directly connect the drain port to the reservoir.

● **DMG-01 Lever Operating Torque**

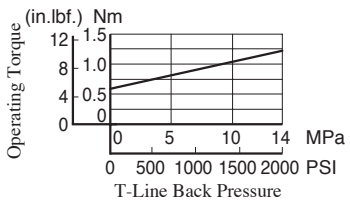

Model Number Designation

F-	DM	T	-03	-2	B	2	A	-50	∗
Special Seals	Series Number	Type of Connec-tion	Valve Size	No. of Valve Position	Spool-Spring Arrangement	Spool Type	Special Two Position Valve	Design Number	Design Standard
F: Special Seals for Phos-phate ester type fluids (Omit if not required)	**DM**: Manually Operated Direc-tional Valves	**T**: Threaded Connec-tion	**03**	**3**	**C**: Spring Centred **D**: No-Spring Detented **B**: Spring Offset	**2 , 3** **4 , 40** **5 , 6** **60 , 7** **8 , 9** **10 , 11** **12**	**A★,B★** (Omit if not required)	**50**	**None**: Japanese Std. "JIS" **80**: European Design Std. **90**: N. American Design Std.
			06 (Piping size 3/4) **06X** (Piping size 1)					**30**	
			10 (Piping size 1-1/4) **10X** (Piping size 1-1/2)					**30**	
		G: Sub-plate Mounting	**01**	**2**				**10**	**None**: Japanese Std. "JIS" and Euro-pean Design Std. **90**: N. American Design Std.
			03					**50**	
			04					**21**	
			06					**50**	
			10					**40**	
			See the table below for combinations.						

★Refer to column "valves using neutral position and side position" (special 2-position valve) on page 431.

Yuken can offer flanged connection valves described below.
Consult us for the details.

Model Numbers	Rated Flow L/min (U.S.GPM)	Max. Operating Pressure MPa (PSI)
DMF-10-∗∗∗-30∗	315 (83.2)	21 (3050)
DMF-16-∗∗∗-31∗	400 (106)	

Maximum Flow of DMG-04-3C∗

Model Numbers	Max. Flow L/min (U.S.GPM)		
	7 MPa(1020 PSI)	14 MPa(2030 PSI)	21 MPa(3050 PSI)
DMG-04-3C2	200 (52.8)	130 (34.3)	85 (22.5)
DMG-04-3C3	180 (47.6)	90 (23.8)	70 (18.5)
DMG-04-3C4	200 (52.8)	200 (52.8)	90 (23.8)
DMG-04-3C40	200 (52.8)	200 (52.8)	105 (27.7)
DMG-04-3C5	80 (21.1)	50 (13.2)	40 (10.6)
DMG-04-3C6	90 (23.8)	60 (15.9)	55 (14.5)
DMG-04-3C60	140 (37.0)	70 (18.5)	55 (14.5)
DMG-04-3C7	200 (52.8)	75 (19.8)	55 (14.5)
DMG-04-3C9	200 (52.8)	125 (33.0)	100 (26.4)
DMG-04-3C10	200 (52.8)	130 (34.3)	85 (22.5)
DMG-04-3C11	200 (52.8)	150 (39.6)	85 (22.5)
DMG-04-3C12	200 (52.8)	200 (52.8)	95 (25.1)

Graphic Symbols

Spring Centred Models (3C∗)

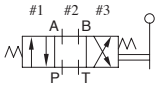

No-Spring Detented Models

3D∗

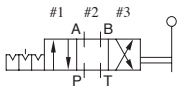

2D∗

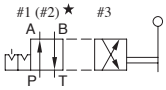

Spring Offset Models (2B∗)

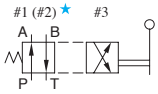

★. Position #2 is applied for models DMG-01-2B∗ and DM^{T}_{G}-03-2B∗/2D∗.

List of Spool Type

Spool Type	DMG-01			DMT-03 DMG-03			DMT-06∗ DMT-10∗		DMG-04 DMG-06 DMG-10	
	3C 3D	2D	2B	3C 3D	2D	2B	3C 3D	2D 2B	3C 3D	2D 2B
2	○	○	○	○	○	○	○	○	○	○
3	○	○	○	○	—	○	○	○	○	○
4	○	—	—	○	—	—	○	○	○	○
40	○	—	—	○	—	—	○	○	○	○
5	○	—	—	—	—	—	—	—	—	—
	—	—	—	—	—	—	○	—	○	—
6	—	—	—	—	—	—	—	—	○	—
	—	—	—	—	—	—	○	—	—	—
60	○	—	—	○	—	—	—	—	○	—
	—	—	—	—	—	—	○	—	—	—
7	○	○	—	—	—	—	○	○	○	○
8	○	○	○	—	—	○	○	○	—	—
9	○	—	—	○	—	—	○	—	○	—
10	○	—	—	○	—	—	○	—	○	—
11	○	—	—	—	—	—	○	—	○	—
12	○	—	—	○	—	—	○	—	○	—

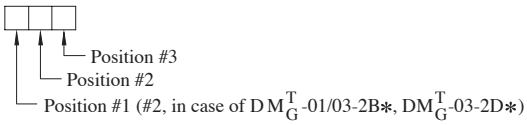

Note: The ○ mark indicate the spool type available for each type.

Valves Using Neutral Position and Side Position (Special Two Position Valve)

In addition to the standard two positions valves (2D∗, 2B∗), the following two types of two positions valves are available: Valves with neutral position (#2) and position #1 (2B∗A, 2D∗A), valves with neutral position (#2) and position #3 (2B∗B, 2D∗B).
The ○ mark in the table below indicates the spool type available for each models.

Spring Offset Models

Valve Type	Graphic Symbols	Model			Valve Type	Graphic Symbols	Model			
		DMT-03 DMG-03	DMT-06∗ DMT-10∗	DMG-04 DMG-06 DMG-10			DMG-01	DMT-03 DMG-03	DMT-06∗ DMT-10∗	DMG-04 DMG-06 DMG-10
2B2A		○	○	○	2B2B		○	○	○	○
2B3A		○	○	○	2B3B		○	○	○	○
2B4A		—	○	○	2B4B		○	○	○	○
2B40A		—	○	○	2B40B		○	—	○	○
—	—	—	—	—	2B5B		○	—	—	—
2B5A		—	○	○			—	—	○	○
2B6A		—	—	○	2B6B		—	—	—	○
		—	○	—			—	—	○	—
2B60A		—	—	○	2B60B		○	○	—	○
		—	○	—			—	—	○	—
2B7A		—	○	○	2B7B		○	—	○	○
2B8A		—	○	—	2B8B		○	—	○	—
2B9A		—	○	○	2B9B		○	—	○	○
2B10A		—	○	○	2B10B		○	○	○	○
2B11A		—	○	○	2B11B		○	—	○	○
2B12A		—	○	○	2B12B		○	○	○	○

★ Position #1
★ Position #2

★ Position #2
★ Position #3

No-spring Detented Models

Valve Type	Graphic Symbols	Model		Valve Type	Graphic Symbols	Model		
		DMT-06∗ DMT-10∗	DMG-04 DMG-06 DMG-10			DMG-01	DMT-06∗ DMT-10∗	DMG-04 DMG-06 DMG-10
2D2A		○	○	2D2B		○	○	○
2D3A		○	○	2D3B		○	○	○
2D4A		○	○	2D4B		○	○	○
2D40A		○	○	2D40B		○	○	○
—	—	—	—	2D5B		○	—	—
2D5A		○	○			—	○	○
2D6A		—	○	2D6B		—	—	○
		○	—			—	○	—
2D60A		—	○	2D60B		○	—	○
		○	—			—	○	—
2D7A		○	○	2D7B		○	○	○
2D8A		○	—	2D8B		○	○	—
2D9A		○	○	2D9B		○	○	○
2D10A		○	○	2D10B		○	○	○
2D11A		○	○	2D11B		○	○	○
2D12A		○	○	2D12B		○	○	○

★ Position #1
★ Position #2

★ Position #2
★ Position #3

★. Position number is determined with three position type (3C∗ and 3D∗) as the standard.

Sub-plates

Valve Model Numbers	Japanese Standard "JIS"			European Design Standard			N. American Design Standard		
	Sub-plate Model Numbers	Thread Size	Approx. Mass kg (1bs.)	Sub-plate Model Numbers	Thread Size	Approx. Mass kg (1bs.)	Sub-plate Model Numbers	Thread Size	Approx. Mass kg (1bs.)
DMG-01	DSGM-01-31	Rc 1/8	0.8 (1.8)	DSGM-01-3080	1/8 BSP.F	0.8 (1.8)	DSGM-01-3190	1/8 NPT	0.8 (1.8)
	DSGM-01X-31	Rc 1/4	0.8 (1.8)	DSGM-01X-3080	1/4 BSP.F	0.8 (1.8)	DSGM-01X-3190	1/4 NPT	0.8 (1.8)
	DSGM-01Y-31	Rc 3/8	0.8 (1.8)	—	—	—	DSGM-01Y-3190	3/8 NPT	0.8 (1.8)
DMG-03	DSGM-03-40	Rc 3/8	3.0 (6.6)	DSGM-03-2180	3/8 BSP.F	3.0 (6.6)	DSGM-03-2190	3/8 NPT	3.0 (6.6)
	DSGM-03X-40	Rc 1/2	3.0 (6.6)	DSGM-03X-2180	1/2 BSP.F	3.0 (6.6)	DSGM-03X-2190	1/2 NPT	3.0 (6.6)
	DSGM-03Y-40	Rc 3/4	4.7 (10.4)	DSGM-03Y-2180	3/4 BSP.F	4.7 (10.4)	DSGM-03Y-2190	3/4 NPT	4.7 (10.4)
DMG-04	DHGM-04-20	Rc 1/2	4.4 (9.7)	DHGM-04-2080	1/2 BSP.F	4.4 (9.7)	DHGM-04-2090	1/2 NPT	4.4 (9.7)
	DHGM-04X-20	Rc 3/4	4.1 (9.0)	DHGM-04X-2080	3/4 BSP.F	4.1 (9.0)	DHGM-04X-2090	3/4 NPT	4.1 (9.0)
DMG-06	DHGM-06-50	Rc 3/4	7.4 (16.3)	DHGM-06-5080	3/4 BSP.F	8.5 (18.7)	DHGM-06-5090	3/4 NPT	7.4 (16.3)
	DHGM-06X-50	Rc 1	7.4 (16.3)	DHGM-06X-5080	1 BSP.F	8.5 (18.7)	DHGM-06X-5090	1 NPT	7.4 (16.3)
DMG-10	DHGM-10-40	Rc 1-1/4	21.5 (47.4)	DHGM-10-4080	1-1/4 BSP.F	21.5 (47.4)	DHGM-10-4090	1-1/4 NPT	21.5 (47.4)
	DHGM-10X-40	Rc 1-1/2	21.5 (47.4)	DHGM-10X-4080	1-1/2 BSP.F	21.5 (47.4)	DHGM-10X-4090	1-1/2 NPT	21.5 (47.4)

- Sub-plates are available. Specify the sub-plate model number from the table above. When sub-plates are not used, the mounting surface should have a good machined finish.
- Sharable with Solenoid Operand Directional Valves and Solenoid Controlled Pilot Operated Directional Valves. For dimensions, refer to the right table then see the corresponding pages.

- Sub-plate dimensions appearing page

Subplate Model Numbers	Page
DSGM-01∗	356
DSGM-03∗	373
DHGM-04∗	401
DHGM-06∗	402
DHGM-10∗	403

Mounting Bolts

Valve Model Numbers	Socket Head Cap Screw				
	Japanese Standard "JIS" European Design Standard	N. American Design Standard	Qty.	Tightening Torque Nm (in. 1bs.)	
DMG-01	M5 × 45 Lg.	No. 10-24 UNC × 1-3/4 Lg.	4	5-7	(44-62)
DMG-03	M6 × 35 Lg.	1/4-20 UNC × 1-3/4 Lg.	4	12-15	(106-133)
DMG-04	M6 × 40 Lg.	1/4-20 UNC × 1-1/2 Lg.	2	12-15	(106-133)
	M10 × 45 Lg.	3/8-16 UNC × 1-3/4 Lg.	4	58-72	(513-637)
DMG-06	M12 × 60 Lg.	1/2-13 UNC × 2-1/2 Lg.	6	100-123	(885-1089)
DMG-10	M20 × 75 Lg.	3/4-10 UNC × 3 Lg.	8	473-585	(4195-5177)

Instructions

- Avoid connecting the Tank Port "T" to a line with possible surge pressure.

Pressure Drop

The following characteristics are based on the following conditions: viscosity of the fluid: 35 mm^2/s (164 SSU) and Specific Gravity: 0.850

- For any other viscosity, multiply the factors in the table below.

Viscosity	mm^2/s	15	20	30	40	50	60	70	80	90	100
	SSU	77	98	141	186	232	278	324	371	417	464
Factor		0.81	0.87	0.96	1.03	1.09	1.14	1.19	1.23	1.27	1.30

- For any other specific gravity (G'), the pressure drop (⊿P') may be obtained from the formula below.
  ⊿P' = ⊿P (G'/G) where, ⊿P is a value on the following chart and G is 0.850.

● DMT-06, 06X

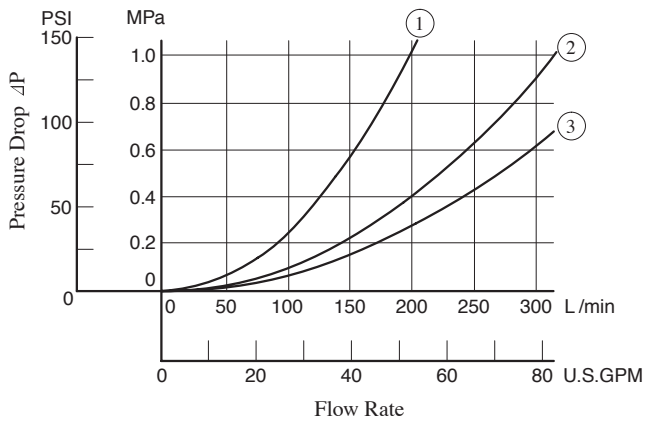

Spool Type	Pressure Drop Curve Number				
	P→A	B→T	P→B	A→T	P→T
2	②	②	②	②	
3	③	②	③	②	②
4	②	③	②	②	—
40	②	②	②	②	—
5	③	②	②	②	—
6	③	②	③	②	①
60	③	②	③	②	①
7	②	②	②	②	—
8	②	—	②	—	—
9	③	②	③	②	—
10	②	②	②	②	—
11	③	②	②	②	—
12	②	②	②	②	—

DMT-10, 10X

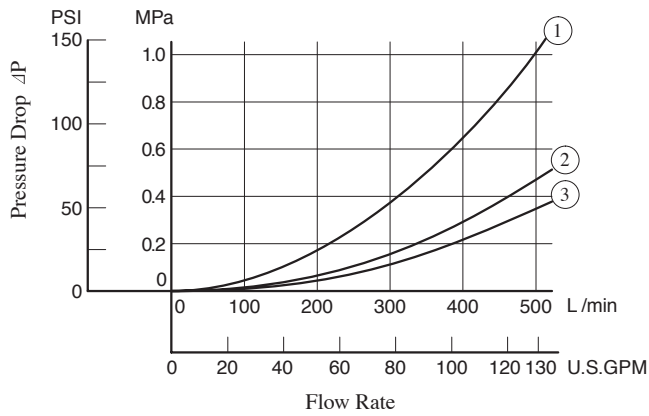

Spool Type	Pressure Drop Curve Number				
	P→A	B→T	P→B	A→T	P→T
2	③	②	③	②	—
3	③	②	③	②	②
4	③	②	③	②	—
40	③	②	③	②	—
5	③	②	③	②	—
6	③	③	③	③	①
60	③	③	③	③	①
7	③	②	③	②	—
8	③	—	③	—	—
9	③	②	③	②	—
10	③	②	③	②	—
11	③	②	③	②	—
12	③	②	③	②	—

DMG-01

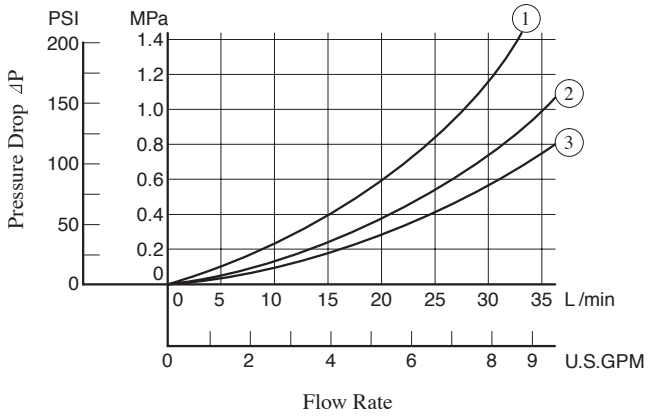

Valve type				Pressure Drop Curve Number				
3C∗	3D∗	2D∗	2B∗	P→A	B→T	P→B	A→T	P→T
3C2	3D2	2D2		③	③	③	③	—
3C3	3D3	2D3		③	③	③	③	②
3C4	3D4			③	③	③	③	—
3C40	3D40			③	③	③	③	—
3C5	3D5			②	①	①	①	③
3C60	3D60			①	①	①	①	③
3C7	3D7	2D7		③	③	③	③	—
3C8	3D8	2D8		③	—	③	—	—
3C9	3D9			③	③	③	③	—
3C10	3D10			③	③	③	③	—
3C11	3D11			③	③	③	③	—
3C12	3D12			③	③	③	③	—
			2B2	②	②	③	③	—
			2B3	②	②	③	③	—
			2B8	③	—	③	—	—

DMG-04

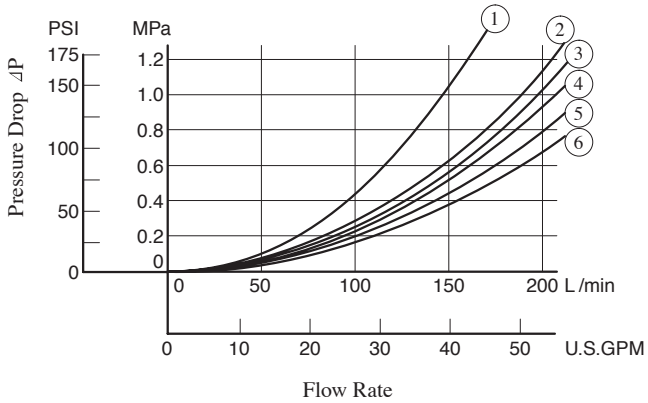

Spool Type	Pressure Drop Curve Number				
	P→A	B→T	P→B	A→T	P→T
2	⑤	②	⑤	④	—
3	⑥	③	⑥	⑤	③
4	⑤	④	⑤	⑤	—
40	⑤	④	⑤	⑤	—
5	⑤	②	④	⑤	①
6	②	③	④	②	①
60	②	③	④	②	①
7	⑤	②	⑤	⑤	—
9	⑥	②	⑥	⑤	—
10	⑤	④	⑤	⑤	—
11	⑤	④	⑤	⑤	—
12	⑤	③	⑤	⑤	—

- For **DMT-03**, **DMG-03**, **DMG-06**, and **DMG-10**, refer to the table below then see the related page.

Model Number	Pressure Drop Characteristics	Page	Remarks
DMT-03 DMG-03	Same as DSG-03 Series Solenoid Operated Directional Valves (Standard Type)	371	3D∗ is same as 3C∗
DMG-06	Same as Solenoid Controlled Pilot Operated Directional Valves (DSHG-06)	393	
DMG-10	Same as Solenoid Controlled Pilot Operated Directional Valves (DSHG-10)	393	

DMT-03-∗∗∗-50/5080/5090

How to Change Lever Position:

The lever position can be changed to any position in five different positions shown on the sketch in the right. For the lever position change, remove the Soc. Hd. Cap Screw and lever once, set the lever at the required position and tighten it with the Soc. Hd. Cap Screw firmly.

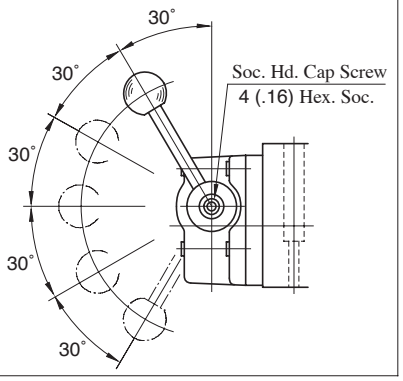

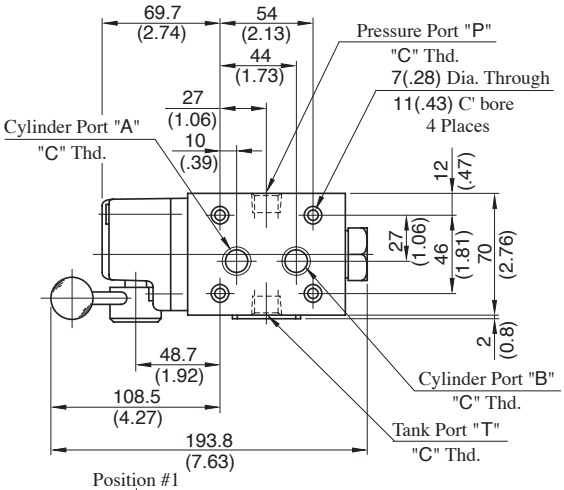

★1. Lever Operating Torque:
Not exceeding 30 Nm (266 IN. 1bs.)

Model Numbers	"C" Thd.
DMT-03-∗∗∗-50	Rc 3/8
DMT-03-∗∗∗-5080	3/8 BSP.F
DMT-03-∗∗∗-5090	3/8 NPT

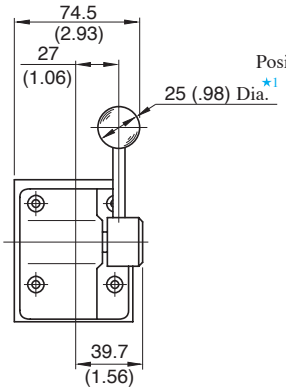

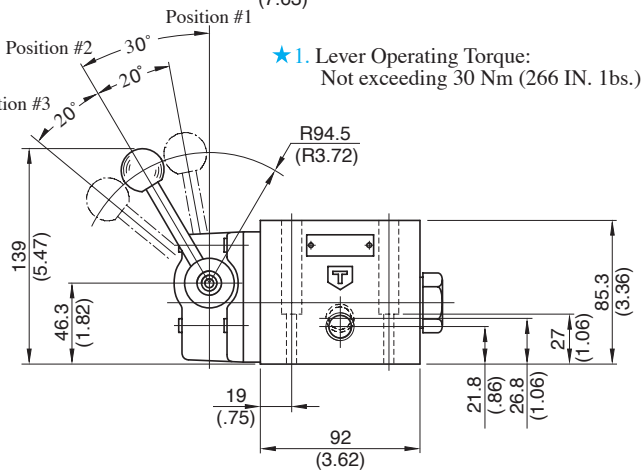

DIMENSIONS IN MILLIMETRES (INCHES)

DMT-06, 06X-∗∗∗-30/3080/3090
DMT-10, 10X-∗∗∗-30/3080/3090

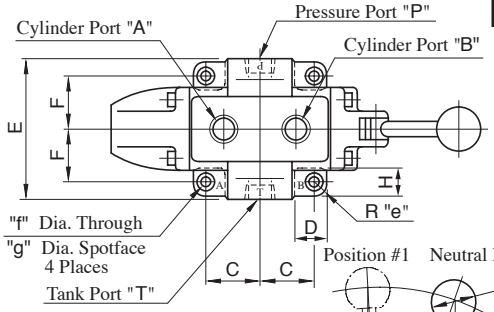

Model Numbers	"h" Thd.
DMT-06-∗∗∗-30 DMT-06X-∗∗∗-30	Rc 3/4 Rc 1
DMT-06-∗∗∗-3080 DMT-06X-∗∗∗-3080	3/4 BSP.F 1 BSP.F
DMT-06-∗∗∗-3090 DMT-06X-∗∗∗-3090	3/4 NPT 1 NPT
DMT-10-∗∗∗-30 DMT-10X-∗∗∗-30	Rc 1-1/4 Rc 1-1/2
DMT-10-∗∗∗-3080 DMT-10X-∗∗∗-3080	1-1/4 BSP.F 1-1/2 BSP.F
DMT-10-∗∗∗-3090 DMT-10X-∗∗∗-3090	1-1/4 NPT 1-1/2 NPT

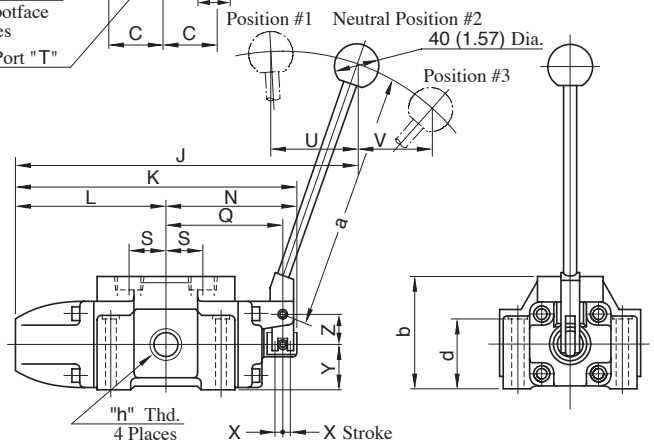

Model No.	Dimension mm (Inches)																					
	C	D	E	F	H	J	K	L	N	Q	S	U	V	X	Y	Z	a	b	d	e	f	g
DMT-06 DMT-06X	50 (1.97)	30 (1.18)	126 (4.96)	47.5 (1.87)	24 (.94)	320 (12.60)	255 (10.04)	137 (5.39)	118 (4.65)	107 (4.21)	33.5 (1.32)	86 (3.39)	76 (2.99)	9 (.35)	40 (1.57)	25 (.98)	250 (9.84)	100 (3.94)	63.5 (2.50)	12 (.47)	11 (.43)	17.5 (.69)
DMT-10 DMT-10X	66 (2.60)	40 (1.57)	160 (6.30)	62.5 (2.46)	33 (1.30)	402 (15.83)	320 (12.60)	173 (6.81)	147 (5.79)	135 (5.31)	40 (1.57)	102 (4.02)	90 (3.54)	12.5 (.49)	50 (1.97)	35 (1.38)	300 (11.81)	120 (4.72)	78.5 (3.09)	15 (.59)	13.5 (.53)	21 (.83)

DMG-01-∗∗∗-10/1090

Mounting surface: ISO 4401-AB-03-4-A

DIMENSIONS IN MILLIMETRES (INCHES)

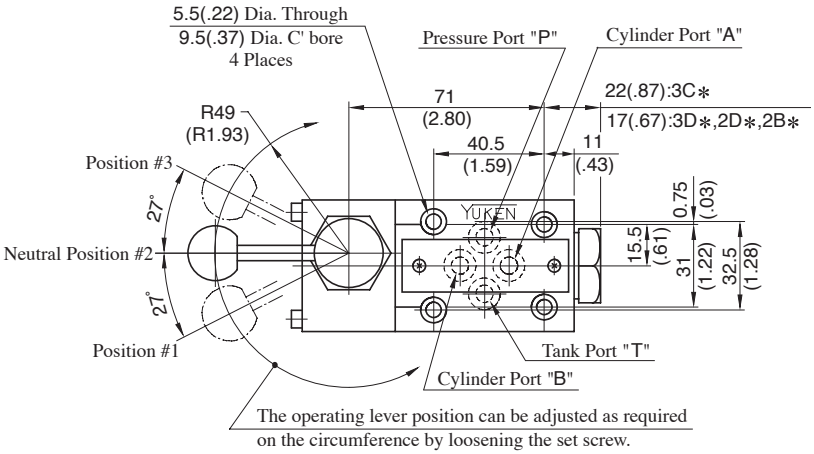

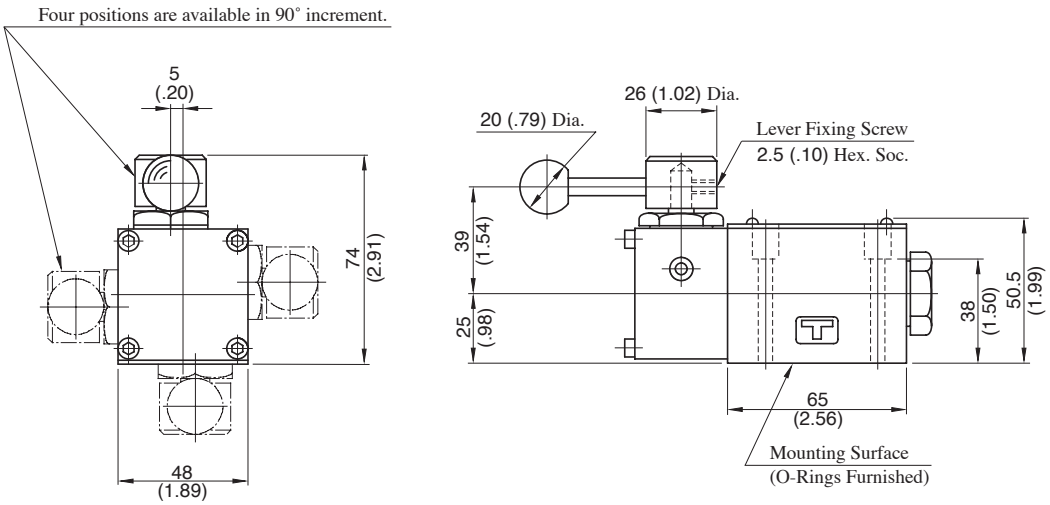

Note: For the valve mounting surface dimensions, see the dimensional drawing of the sharable sub-plate in page 356.

DMG-03-∗∗∗-50/5090

Mounting surface: ISO 4401-AC-05-4-A

DIMENSIONS IN MILLIMETRES (INCHES)

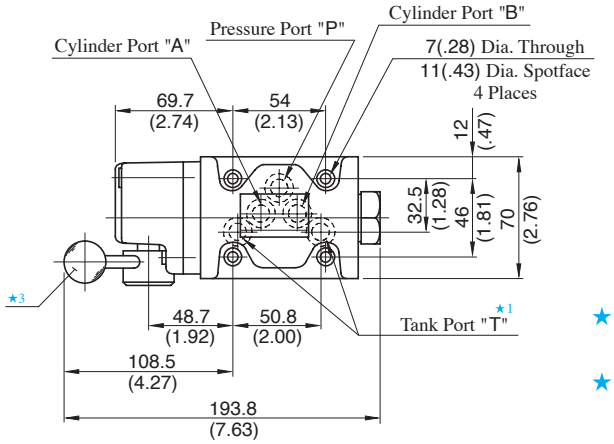

★ 1. Although the tank port is shown on the left in our sub-plate either may be used.

★ 2. The position of operating lever can be changed as required. For the detail, see the DMT-03 in the previous page.

★ 3. Lever Operating Torque:
Not exceeding 30 Nm (266 IN. 1bs.)

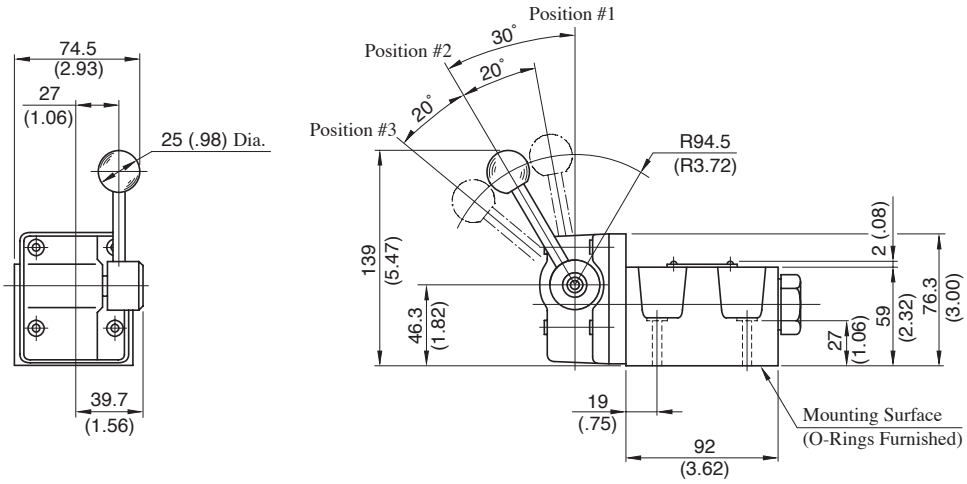

Note: For the valve mounting surface dimensions, see the dimensional drawing of the sharable sub-plate in page 373.

DMG-04-∗∗∗-21/2190

Mounting surface: ISO 4401-AD-07-4-A

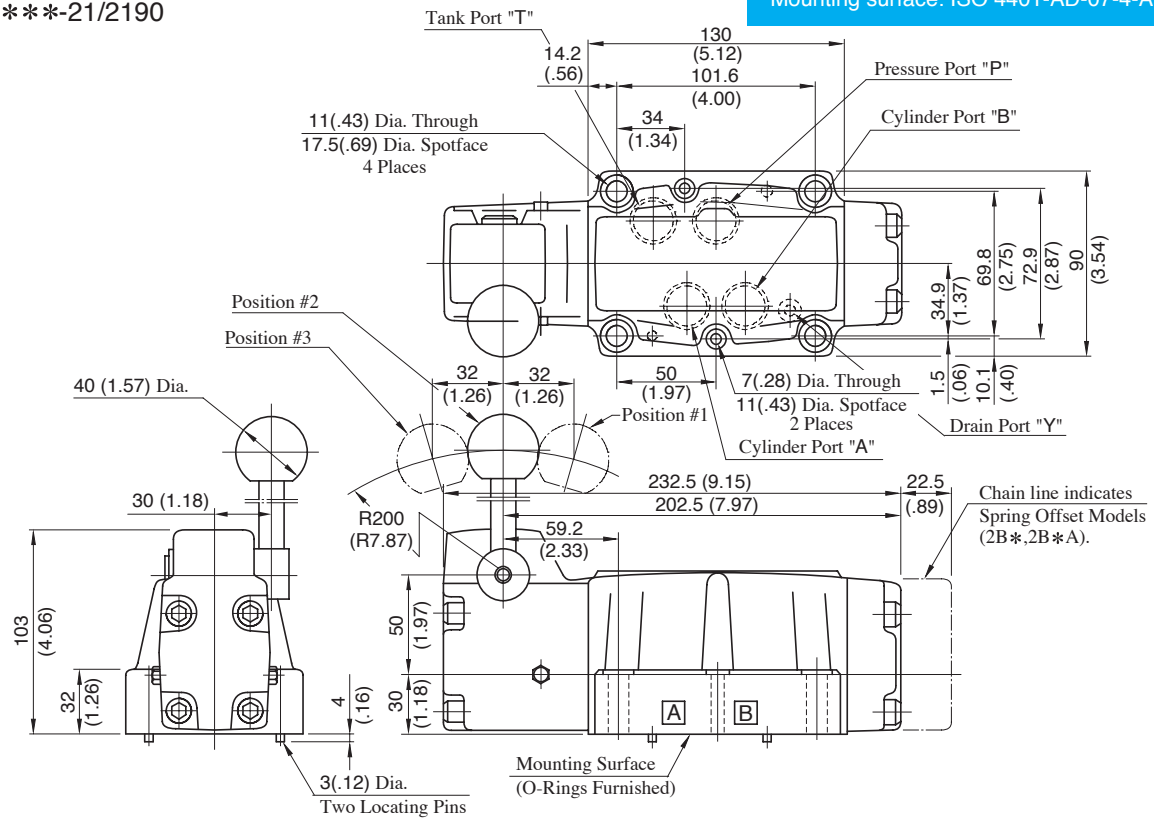

Note: For the valve mounting surface dimensions, see the dimensional drawing of the sharable sub-plate in page 401.

DIMENSIONS IN MILLIMETRES (INCHES)

DMG-06-∗∗∗-50/5090

Mounting surface: ISO 4401-AE-08-4-A

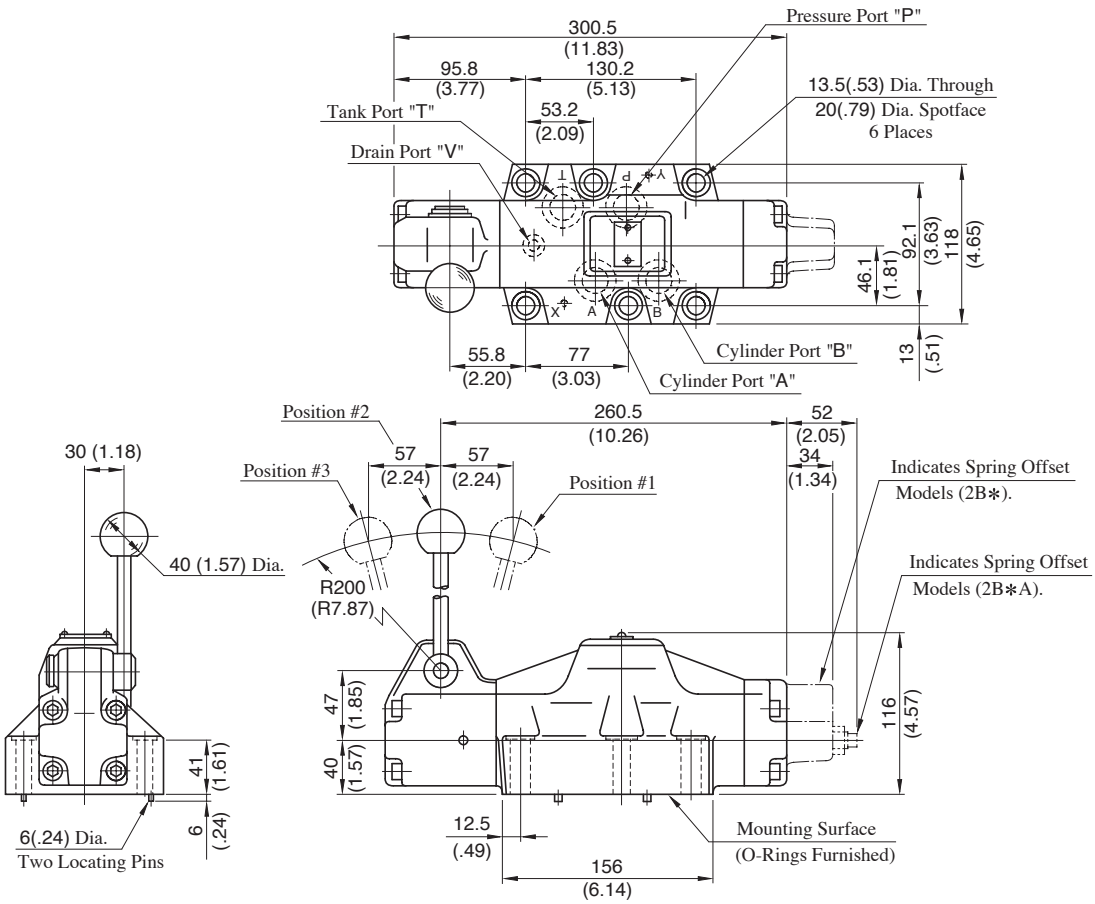

Note: For the valve mounting surface dimensions, see the dimensional drawing of the sharable sub-plate in page 402.

DMG-10-∗∗∗-50/5090

Mounting surface: ISO 4401-AF-10-4-A

DIMENSIONS IN MILLIMETRES (INCHES)

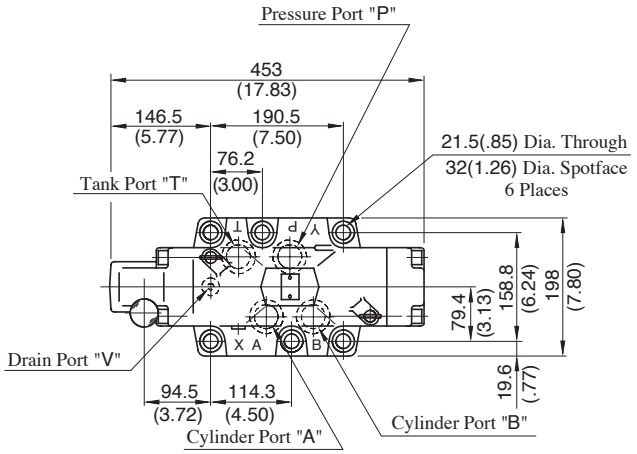

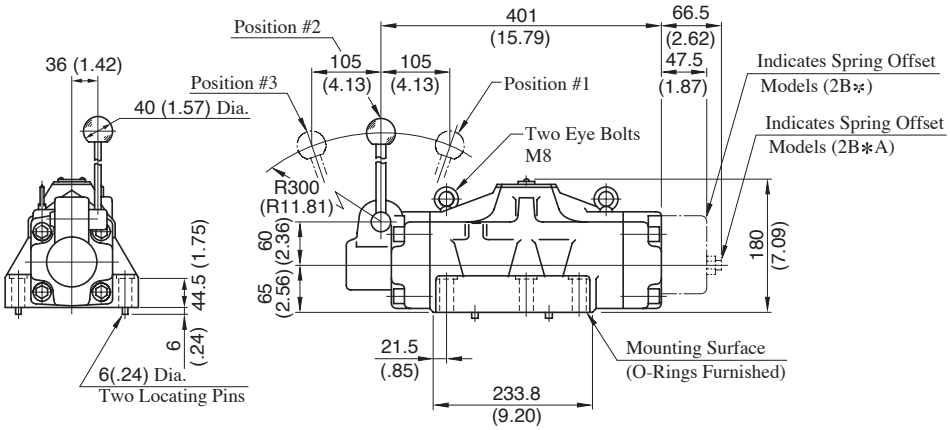

Note: For the valve mounting surface dimensions, see the dimensional drawing of the sharable sub-plate in page 403.

List of Seals

DMG-01-∗∗∗-10/1090

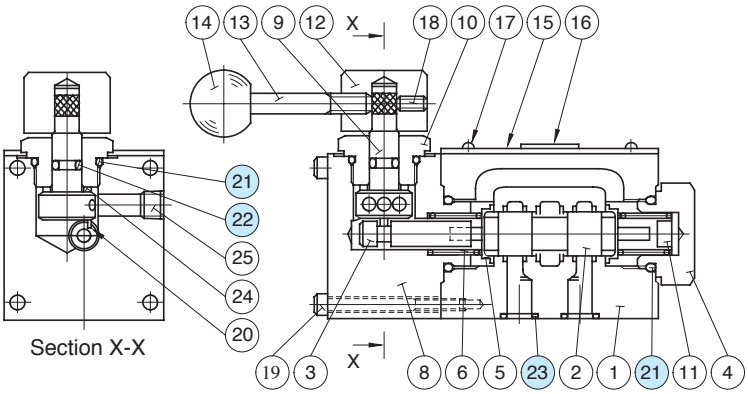

Item	Name of Parts	Part Numbers	Qty.
21	O-Ring	SO-NB-P18	3
22	O-Ring	SO-NA-P6	1
23	O-Ring	SO-NB-P9	4

Note: When ordering the o-ring, please specify the seal kit number (KS-DMG-01-10).

DMT-03-∗∗∗-50/5080/5090
DMG-03-∗∗∗-50/5090

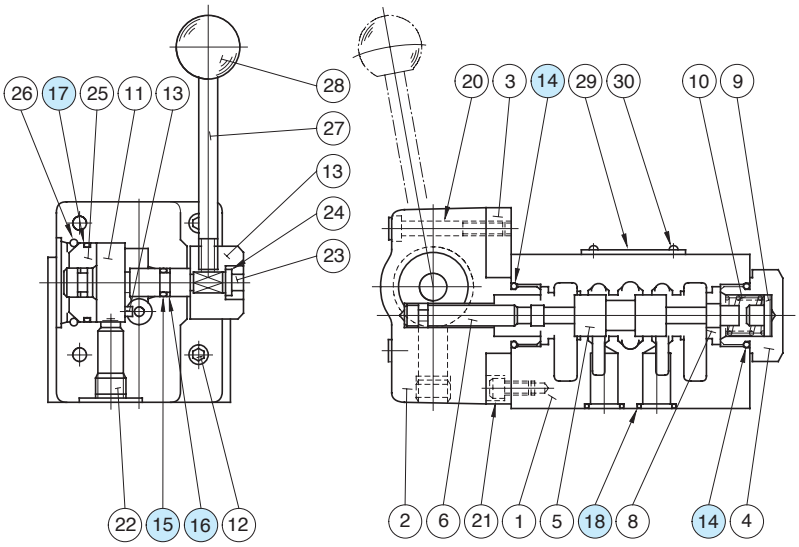

Item	Name of Parts	Part Numbers	Qty.
14	O-Ring	SO-NB-P21	2
15	O-Ring	SO-NA-P8	2
16	Back Up Ring	SO-BB-P8	2
17	O-Ring	SO-NB-A023	1
18	O-Ring	SO-NB-A014	5

Note: 1. O-rings of Item ⑱ are not used for DMT-03.
2. When ordering the seals, please specify the seal kit number from the table right.

Valve Model Numbers	Seal Kit Numbers
DMT-03-∗∗∗-50/5080/5090	KS-DMT-03-50
DMG-03-∗∗∗-50/5090	KS-DMG-03-50

List of Seals

DMT-06, 06X-∗∗∗-30/3080/3090
DMT-10, 10X-∗∗∗-30/3080/3090

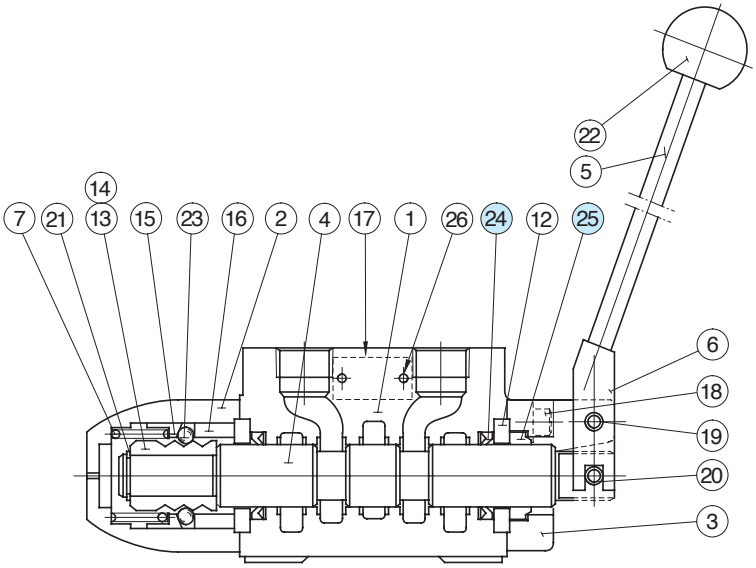

Item	Name of Parts	Part Numbers		Qty.
		DMT-06∗	DMT-10∗	
24	Packing	UPI 32 • 40 • 6Y	UPI 40 • 55 • 10Y	2
25	Dust Seal	DKI 32 • 44 • 7 • 10	DKI 40 • 52 • 7 • 10	1

Note: When ordering the seals, please specify the seal kit number from the table right.

List of Seal Kits

Valve Model Numbers	Seal Kit Numbers
DMT-06∗-∗∗∗-30/3080/3090	KS-DMT-06-30
DMT-10∗-∗∗∗-30/3080/3090	KS-DMT-10-30

DMG-04-∗∗∗-21/2190
DMG-06-∗∗∗-50/5090
DMG-10-∗∗∗-40/4090

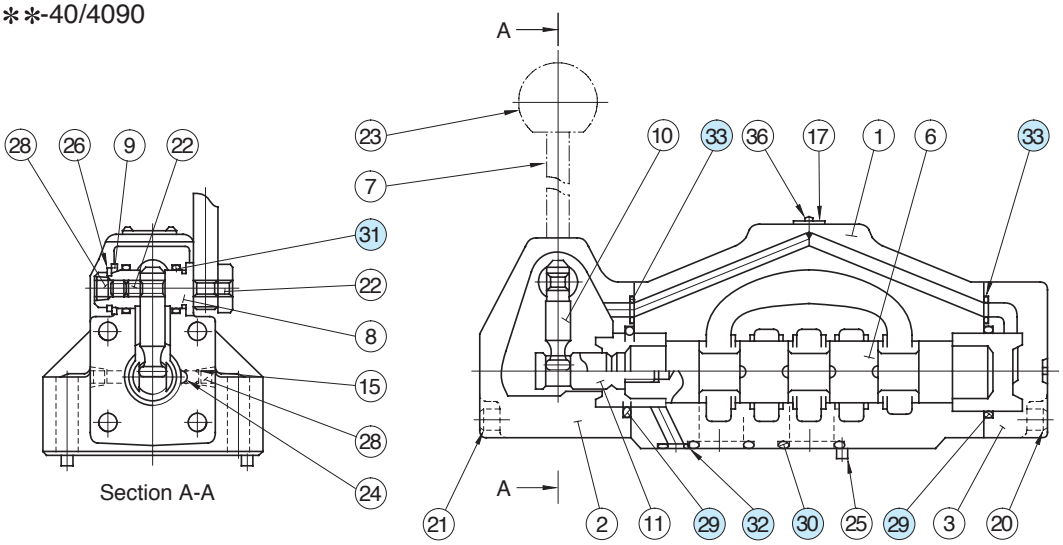

Item	Name of Parts	Part Numbers			Qty.
		DMG-04	DMG-06	DMG-10	
29	O-Ring	SO-NB-P34	SO-NB-P40	SO-NB-G65	2
30	O-Ring	SO-NB-P22A	SO-NB-P30	SO-NB-P42	4
31	O-Ring	SO-NA-P20	SO-NA-P20	SO-NA-P25	2
32	O-Ring	SO-NB-P9	SO-NB-P14	SO-NB-P20	1
33	O-Ring	SO-NB-P9	SO-NB-P10	SO-NB-P14	2

Note: When ordering the seals, please specify the seal kit number from the table right.

List of Seal Kits

Valve Model Numbers	Seal Kit Numbers
DMG-04∗-∗∗∗-21/2190	KS-DMG-04-21
DMG-06∗-∗∗∗-50/5090	KS-DMG-06-50
DMG-10-∗∗∗-40/4090	KS-DMG-10-40

Mechanically Operated Directional Valves

These valves are chiefly used to shift the pilot circuit. Rotary Type Directional Valves and Cam Operated Type Directional Valves are available.

Rotary Type Directional Valves

These valves are used to rotate the spool either manually or by way of cam and shift the direction of oil flow. The detented mechanism incorporated in these valves prevents the valve from being changed over by itself due to vibrations or any other shocks.

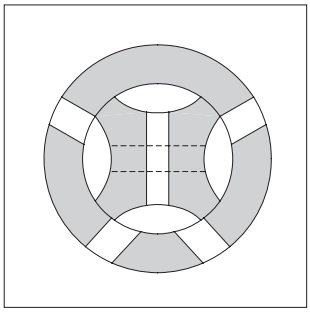

Specifications

Model Numbers		Rated Flow L/min (U.S.GPM)	Max. Operating Pressure MPa (PSI)	Max. T-Line Pressure MPa (PSI)	Approx. Mass kg (lbs.)	
Threaded Connection	Sub-plate Mounting				DRT Type	DRG Type
DRT-02-∗D∗-20∗	DRG-02-∗D∗-20∗	16 (4.2)	7 (1020)	7 (1020) ★	4.7 (10.4)	3.4 (7.5)

★ When a back pressure of more than 3 MPa (435 PSI) is generated in the tank port, be sure to use External Drain Type.

Model Number Designation

F-	DR	G	-02	-2	D	2	-A	-R	-20	∗
Special Seals	Series Connection	Type of Mounting	Valve Size	No. of Valve Position	Spool-Spring Arrangement	Spool Type	Operation Type	Drain Connection	Design Number	Design Standards
F: Special seals for phosphate ester type fluids (Omit if not required)	**DR**: Rotary Type Directinal Valve	**T**: Threaded Connection	**02**	**2**	**D**: No-spring Detented	**2**	**A**: Reversing Dog **B**: Reversing Dog & Manual **C**: Manual	**None**: Intrenal Drain **R**: External Drain	**20**	**None**: Japanese Std. "JIS" **80**: European Design Std. **90**: N. American Design Std.
		G: Sub-plate Mounting	**02**	**3**		**4**			**20**	**None**: Japanese Std. "JIS" & European Design Std. **90**: N. American Design Std.

Note: When selecting the Model type, be sure to give the model number from the following Graphic Symbols.
No combinations other than those in the table below are allowed.

Graphic Symbols

No. of Position	2-Position Type			3-Position Type
Operation Type	Reversing Dog Operation	Reversing Dog & Manual Operation	Manual Operation	Manual Operation
Graphic Symbols	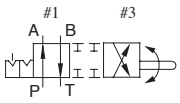	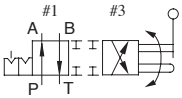	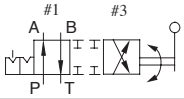	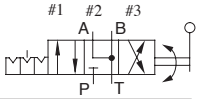
Model No.	DR∗-02-2D2-A	DR∗-02-2D2-B	DR∗-02-2D2-C	DR∗-02-3D4-C

Instructuions

- **Changeover Torque**
  When the pressure of pressure port "P" and cylinder port "A" (or "B") is set to 7 MPa (1020 PSI), the valve changeover torque will be as right side table:

Changeover Torque

Tank Port Back Pres. MPa (PSI)	Torque Nm (in. 1bs.)
0	1.0 (8.9)
3 (435)	4.8 (42.5)

- **2-Way directional valves**
  Be sure to use the External Drain Type Valve of spool type "2" and plug the tank port.

Sub-plates

Drain Connection	Japanese Standard "JIS"		European Design Standard		N.American Design Standard		Approx. Mass kg (1bs.)
	Sub-plate Model Numbers	Thread Size	Sub-plate Model Numbers	Thread Size	Sub-plate Model Numbers	Thread Size	
For Internal Drain	DRGM-02-20 DRGM-02X-20	Rc 1/4 Rc 3/8	DRGM-02-2080 DRGM-02X-2080	1/4 BSP.F 3/8 BSP.F	DRGM-02-2090 DRGM-02X-2090	1/4 NPT 3/8 NPT	1.9 (4.2)
For External Drain	DRGM-02-R-20 DRGM-02X-R-20	Rc 1/4 Rc 3/8	DRGM-02-R-2080 DRGM-02X-R-2080	1/4 BSP.F 3/8 BSP.F	DRGM-02-R-2090 DRGM-02X-R-2090	1/4 NPT 3/8 NPT	

● Sub-plates are available. Specify the sub-plate model number from the table above.
When sub-plates are not used, the mounting surface should have a good machined finish.

Mounting Bolts

The Sub-plate Mounting Type Valves (DRG-02) only are furnished with the following mounting bolts.

Model Numbers	Socket Head Cap Screw (5 Pcs.)	
	Japanese Standard "JIS" European Design Standard	N. American Design Standard
DRG-02	M8 × 45 Lg.	5/16-18 UNC × 1-3/4 Lg.

Pressure Drop

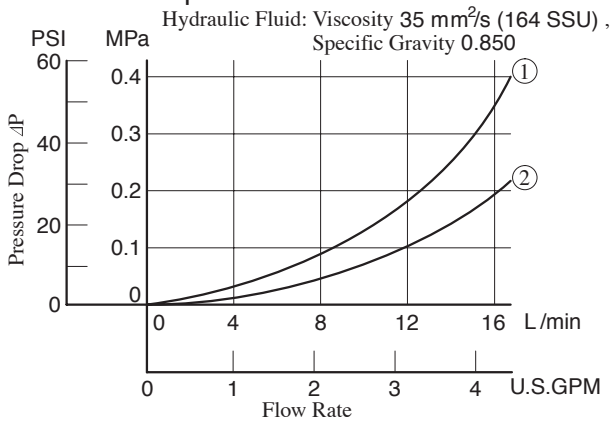

Valve Type	Pressure Drop Curve No.			
	P→A	B→T	P→B	A→T
2D2	②	②	②	②
3D4	②	②	①	②

1. For any other viscosity, multiply by the factors in the table below.

Viscosity	mm²/s	15	20	30	40	50	60	70	80	90	100
	SSU	77	98	141	186	232	278	324	371	417	464
Factor		0.81	0.87	0.96	1.03	1.09	1.14	1.19	1.23	1.27	1.30

2. For any other specific gravity (G'), the pressure drop (⊿P') may be obtained from the formula below.

$$\Delta P' = \Delta P\ (G'/0.850)$$

DRT-02-∗D∗-∗-20/2080/2090

● **Type "A" : Reversing Dog Operation**

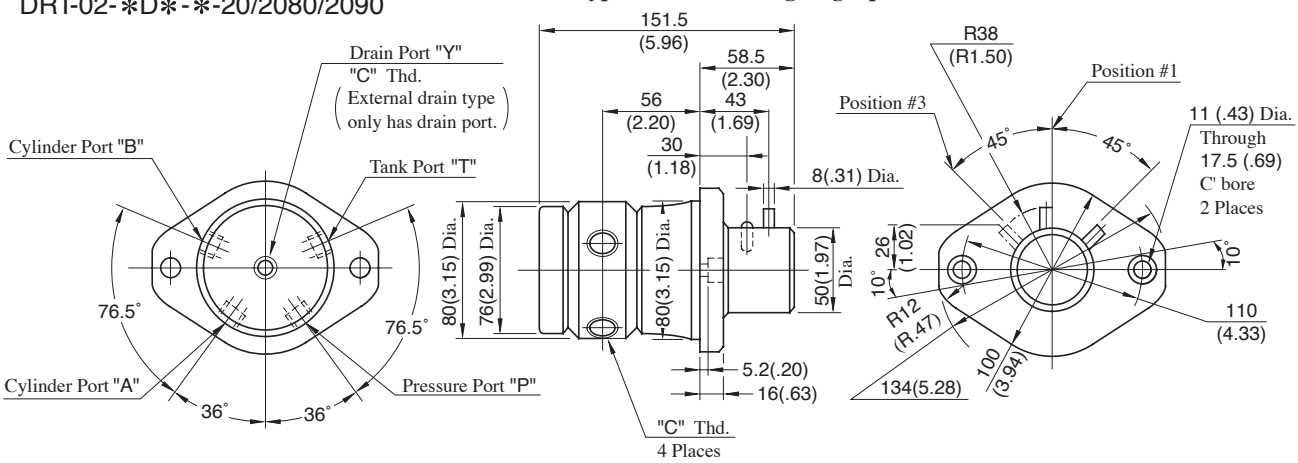

Model Numbers	"C" Thd.
DRT-02-∗D∗-∗-20	Rc 1/4
DRT-02-∗D∗-∗-2080	1/4 BSP.F
DRT-02-∗D∗-∗-2090	1/4 NPT

DIMENSIONS IN MILLIMETRES (INCHES)

● **Type "B": Reverseing Dog and Manual Operation**

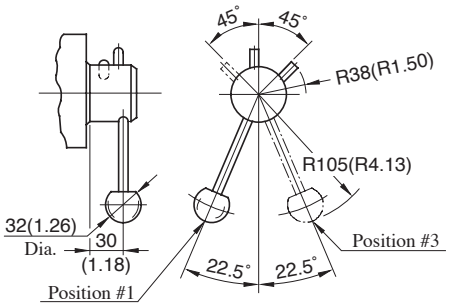

● **Type "C": Manual Operation**

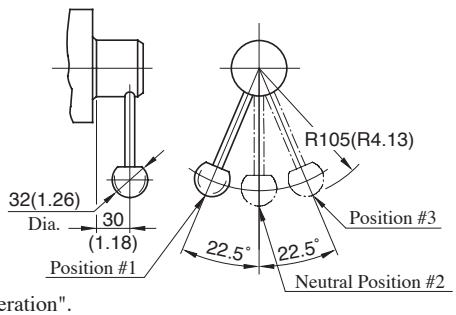

For other dimensions, refer to "Reversing Dog Operation".

DRG-02-∗D∗-∗-20/2090

● Type "A": Reversing Dog Operation

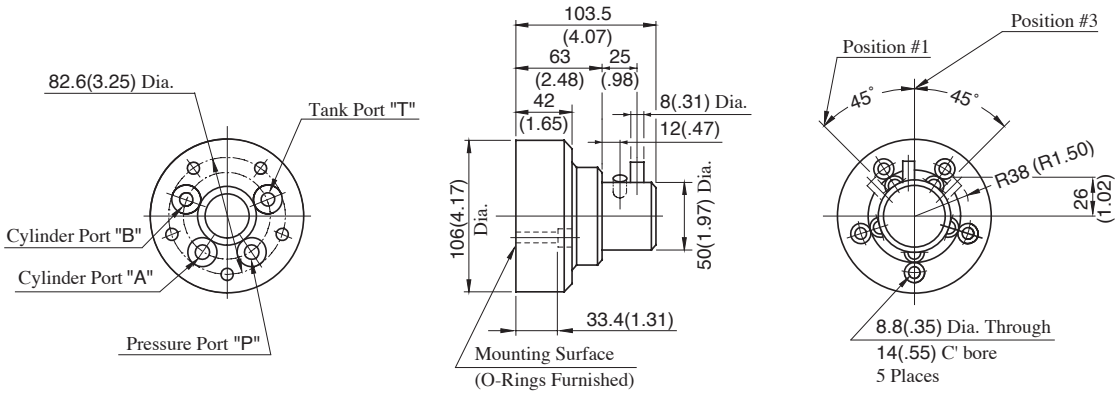

For information on Type "B": reversing Dog and Manual Operation and Type "C": Manual Operation, see DRT-02 on the previous page.

DIMENSIONS IN MILLIMETRES (INCHES)

Sub-plates : DRGM-$^{02}_{02X}$-∗-20/2080/2090

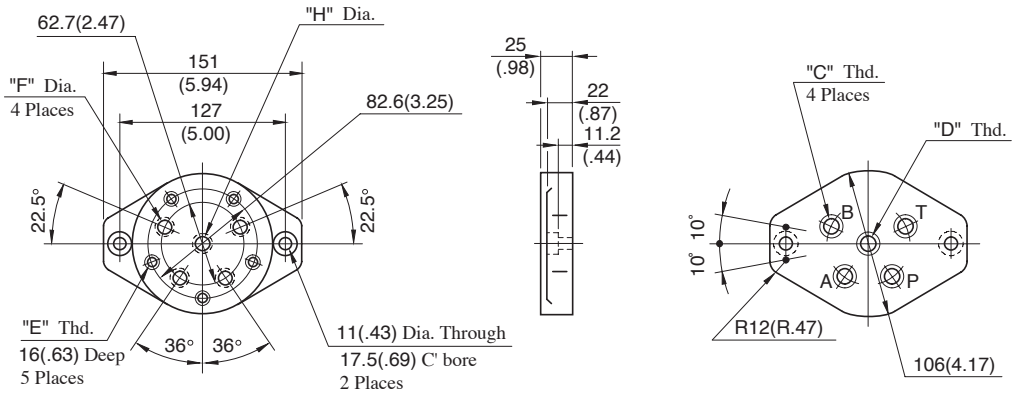

Sub-plate Model Numbers	"C" Thd.	"D" Thd.	"E" Thd.	mm (Inches)		Remarks
				F	H	
DRGM-02-20 DRGM-02X-20	Rc 1/4 Rc 3/8	—	M8	11 (.43)	—	For Internal Drain
DRGM-02-2080 DRGM-02X-2080	1/4 BSP.F 3/8 BSP.F	—	M8	11.7 (.46)		
DRGM-02-2090 DRGM-02X-2090	1/4 NPT 3/8 NPT	—	5/16-18 UNC	11 (.43)		
DRGM-02-R-20 DRGM-02X-R-20	Rc 1/4 Rc 3/8	Rc 1/4	M8	11 (.43)	11 (.43)	For External Drain
DRGM-02-R-2080 DRGM-02X-R-2080	1/4 BSP.F 3/8 BSP.F	1/4 BSP.F	M8	11.7 (.46)	11.7 (.46)	
DRGM-02-R-2090 DRGM-02X-R-2090	1/4 NPT 3/8 NPT	1/4 NPT	5/16-18 UNC	11 (.43)	11 (.43)	

List of Seals

DRT-02-∗D∗-∗-20/2080/2090

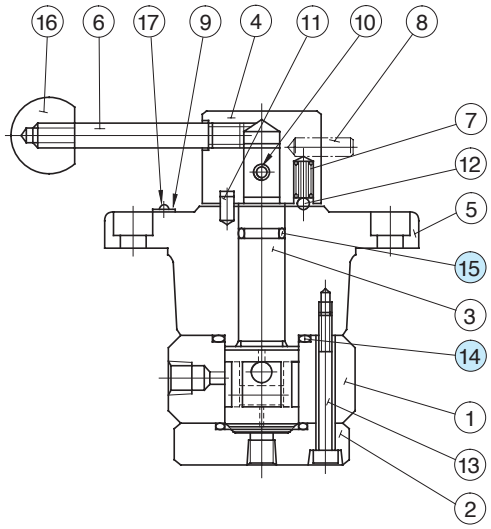

Item	Name of Parts	Part Numbers	Qty.	Remarks
14	O-Ring	SO-NB-G35	2	Included in Seal Kit (Kit No.: KS-DRT-02-20)
15	O-Ring	SO-NA-P16	1	

DRG-02-∗D∗-∗-20/2090

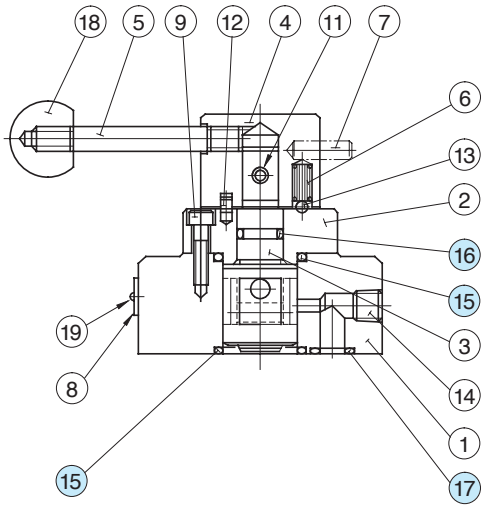

Item	Name of Parts	Part Numbers	Qty.	Remarks
15	O-Ring	SO-NB-G35	2	Included in Seal Kit (Kit No.: KS-DRG-02-20)
16	O-Ring	SO-NA-P16	1	
17	O-Ring	SO-NB-P16	4	

Cam Operated Directional Valves

These valves may be used to shift the direction of oil flow by depressing the spool by way of a cam.

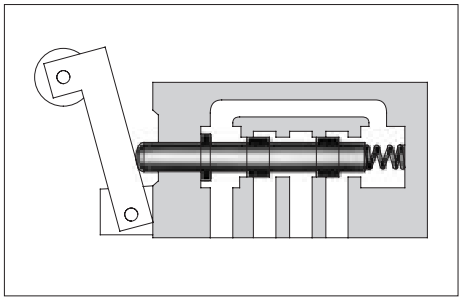

Specifications

Model Numbers		Max. Flow ★ L/min (U.S.GPM)	Max. Operating Pressure MPa (PSI)	Max. T-Line Pressure MPa (PSI)	Approx. Mass kg (lbs.)	
Threaded Connection	Sub-plate Mounting				DCT Type	DCG Type
DCT-01-2B∗-40∗	DCG-01-2B∗-40∗	30 (7.9)	21 (3050)	7 (1020)	1.1 (2.4)	1.1 (2.4)
DCT-03-2B∗-50∗	DCG-03-2B∗-50∗	100 (26.4)	25 (3630)	10 (1450)	4.5 (9.9)	3.8 (8.4)

★ Max. flow indicates the ceiling flow which does not affect the normal function (changeover) of valves.

Model Number Designation

F-	DC	T	-01	-2	B	2	-R	-40	∗
Special Seals	Series Number	Type of Connection	Valve Size	No. of Valve Position	Spool-Spring Arrangement	Spool Type	Roller Position	Design Number	Design Standards
F: Special seals for phosphate ester type fluids (Omit if not required)	**DC**: Cam Operated Directional Valve	**T**: Threaded Connection	**01**	**2**	**B**: Spring Offset	**2**	**None** (Normal Position) **R** **Y** (DC∗-01 only) 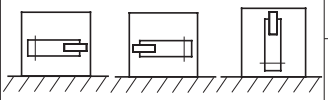 Mounting Surface	**40**	**None**: Japanese Standard "JIS" **80**: European Design Standard **90**: N. American Design Standard
			03			**3**		**50**	
		G: Sub-plate Mounting	**01**			**8**		**40**	**None**: Japanese Standard "JIS" & European Design Standard **90**: N. American Design Standard
			03					**50**	

Sub-plates

Valve Model Numbers	Japanese Standard "JIS"		European Design Standard		N. American Design Standard		Approx. Mass kg (1bs.)
	Sub-plate Model Numbers	Thread Size	Sub-plate Model Numbers	Thread Size	Sub-plate Model Numbers	Thread Size	
DCG-01	DSGM-01-31	Rc 1/8	DSGM-01-3180	1/8 BSP.F	DSGM-01-3190	1/8 NPT	0.8 (1.8)
	DSGM-01X-31	Rc 1/4	DSGM-01X-3180	1/4 BSP.F	DSGM-01X-3190	1/4 NPT	0.8 (1.8)
	DSGM-01Y-31	Rc 3/8	—	—	DSGM-01Y-3190	3/8 NPT	0.8 (1.8)
DCG-03	DSGM-03-41	Rc 3/8	DSGM-03-2180	3/8 BSP.F	DSGM-03-2190	3/8 NPT	3.0 (6.6)
	DSGM-03X-41	Rc 1/2	DSGM-03X-2180	1/2 BSP.F	DSGM-03X-2190	1/2 NPT	3.0 (6.6)
	DSGM-03Y-41	Rc 3/4	DSGM-03Y-2180	3/4 BSP.F	DSGM-03Y-2190	3/4 NPT	4.7 (10.4)

● Sub-plates are available. Specify the sub-plate model number from the table above.
When sub-plates are not used, the mounting surface should have a good machined finish.

Mounting Bolts

Socket head cap screws in the table below are included.

Model Numbers	Socket Head Cap Screw			
	Japanese Standard "JIS" European Design Standard	N. American Design Standard	Qty.	Tightening Torque Nm (in. 1bs)
DCT-01	M5 × 45 Lg.	No. 10-24 UNC × 1-3/4 Lg.	2	5-7 (43-60)
DCG-01	M5 × 45 Lg.	No. 10-24 UNC × 1-3/4 Lg.	4	5-7 (43-60)
DCG-03	M6 × 35 Lg.	1/4-20 UNC × 1-1/2 Lg.	4	12-15 (105-130)

Direction of Oil Flow for Roller Position

Model Numbers	Graphic Symbols	Roller Position and Direction of Oil Flow Roller Stroke from Offset Position mm(Inches) Extended(Offset) — Depressed
DCT DCG-01-2B2	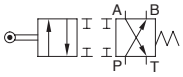	P → B, A → T: 0 – 3.8 (.150) All ports blocked: 3.8 (.150) – 4.6 (.181) P → A, B → T: 4.6 (.181) – 9.5 (.374)
DCT DCG-01-2B3		P → B, A → T: 0 – 3.8 (.150) All ports open: 3.8 (.150) – 4.6 (.181) P → A, B → T: 4.6 (.181) – 9.5 (.374)
DCT DCG-01-2B8	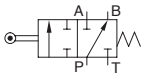	P → B, A&T ports blocked: 0 – 3.8 (.150) P → A, B&T ports blocked: 3.8 (.150) – 9.5 (.374)
DCT DCG-03-2B2	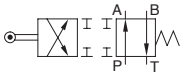	P → A, B → T: 0 – 3.4 (.134) All ports blocked: 3.4 (.134) – 3.8 (.150) P → B, A → T: 3.8 (.150) – 7 (.276)
DCT DCG-03-2B3		P → A, B → T: 0 – 3.0 (.118) All ports open: 3.0 (.118) – 4.0 (.157) P → B, A → T: 4.0 (.157) – 7 (.276)
DCT DCG-03-2B8	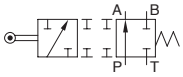	P → A, B&T ports blocked: 0 – 3.6 (.142) All ports blocked: 3.6 (.142) – 4.7 (.185) P → B, A&T ports blocked: 4.7 (.185) – 7 (.276)

Instructions

Valve Type "2B8"

Tank port "T" functions as a drain port. Directly connect it to the reservoir. [Max. allowable back pressure 0.35 MPa (50 PSI)].

Actuation Force

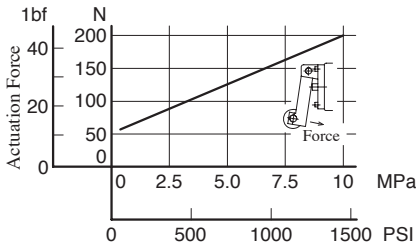

T-Line Back Pressure

Pressure Drop

Pressure drop curves based on viscosity of 35 mm^2/s (164 SSU) and specific gravity of 0.850.

DCT DCG -01

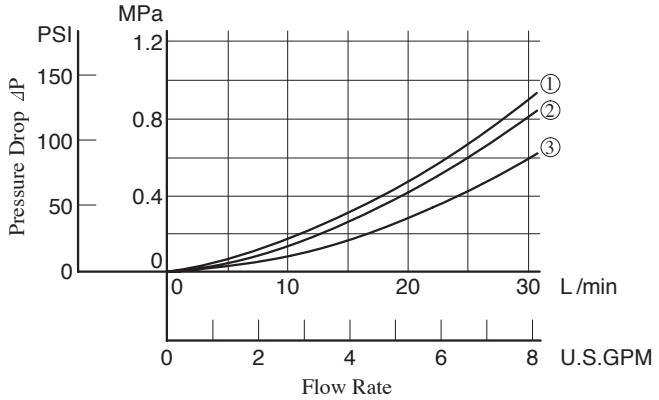

Model Numbers	Pressure Drop Curve No.			
	P→A	B→T	P→B	A→T
DCT-01-2B2	①	①	②	①
DCT-01-2B3				
DCT-01-2B8	②	—	②	—
DCG-01-2B2	②	②	③	③
DCG-01-2B3				
DCG-01-2B8	③	—	③	—

DCT DCG -03

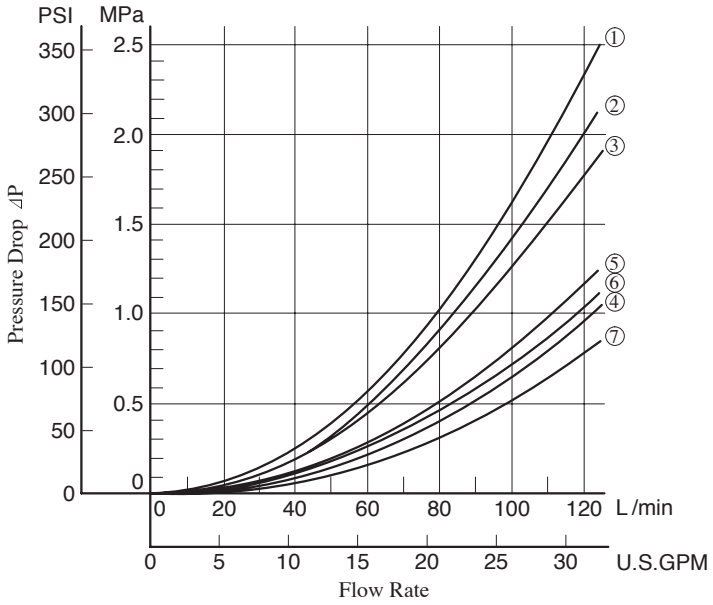

Model Numbers	Pressure Drop Curve No.			
	P→A	B→T	P→B	A→T
DCG-03-2B2	②	①	④	④
DCG-03-2B3	③	②	⑦	⑦
DCG-03-2B8	⑥	—	⑤	—

- For any other viscosity, multiply the factors in the table below.

Viscosity	mm^2/s	15	20	30	40	50	60	70	80	90	100
	SSU	77	98	141	186	232	278	324	371	417	464
Factor		0.81	0.87	0.96	1.03	1.09	1.14	1.19	1.23	1.27	1.30

- For any other specific gravity (G'), the pressure drop (⊿P') may be obtained from the formula below.
  ⊿P' = ⊿P (G'/G) where, ⊿P is a value on the above chart and G is 0.850.

DCT-01-2B∗-∗-40/4080/4090

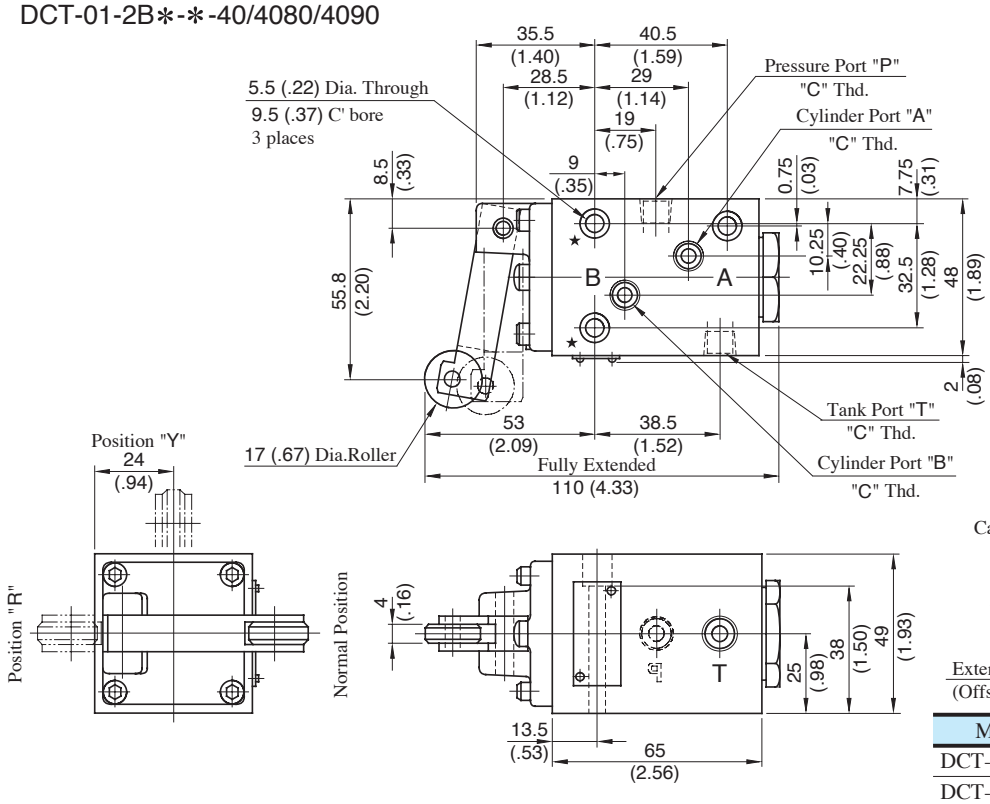

Cam and Roller Travel

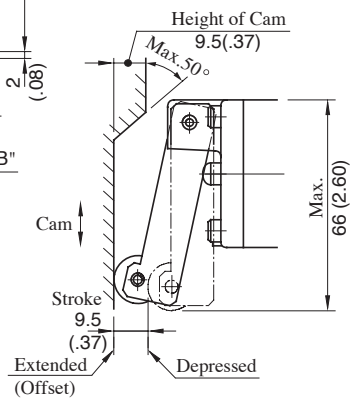

Model Numbers	"C" Thd.
DCT-01-2B∗-∗-40	Rc 1/8
DCT-01-2B∗-∗-4080	1/8 BSP.F
DCT-01-2B∗-∗-4090	1/8 NPT

Note: When mounting the valve, be sure to use two mounting holes marked with ★.

DIMENSIONS IN MILLIMETRES (INCHES)

DCT-03-2B∗-∗-50/5080/5090

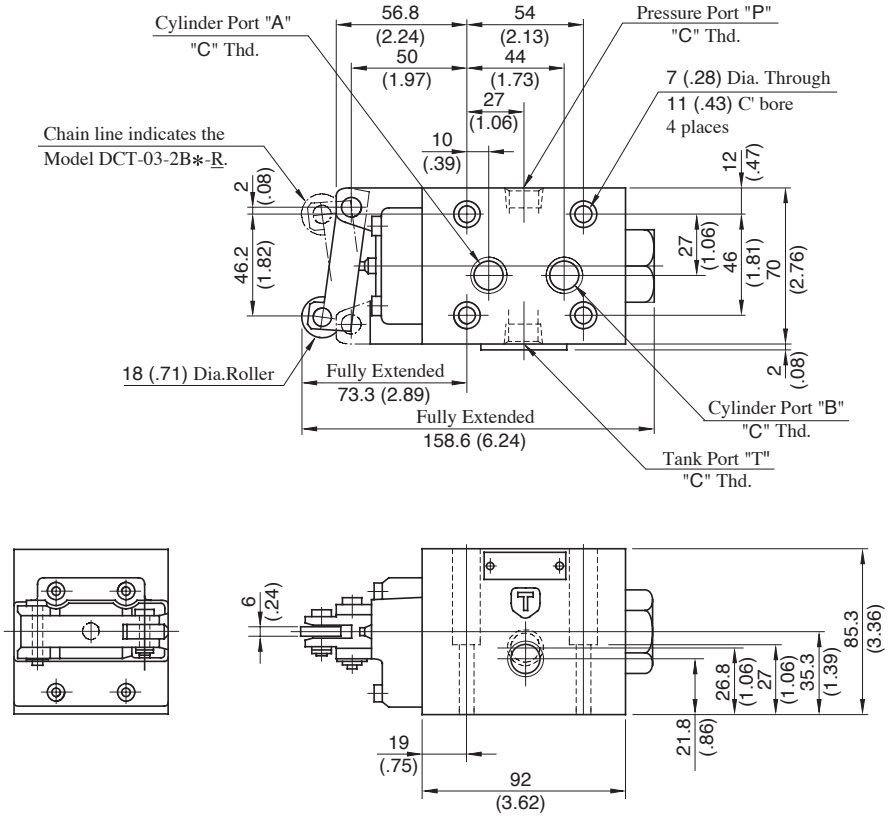

Cam and Roller Travel

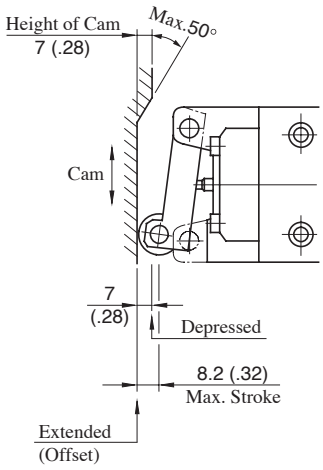

Model Numbers	"C" Thd.
DCT-03-2B∗-∗-50	Rc 3/8
DCT-03-2B∗-∗-5080	3/8 BSP.F
DCT-03-2B∗-∗-5090	3/8 NPT

DCG-01-2B∗-∗-∗40/4090

Mounting Surface: ISO 4401-AB-03-4-A

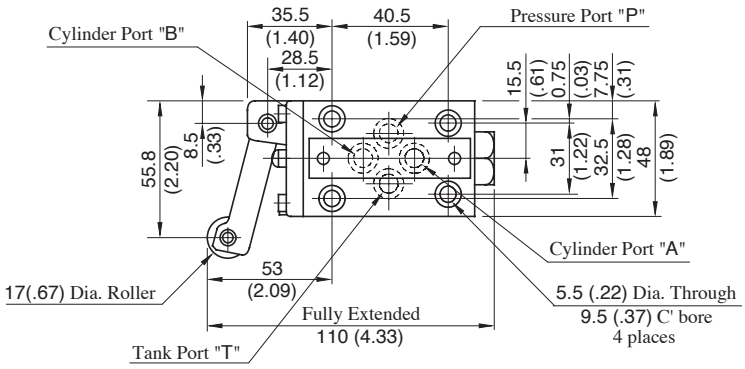

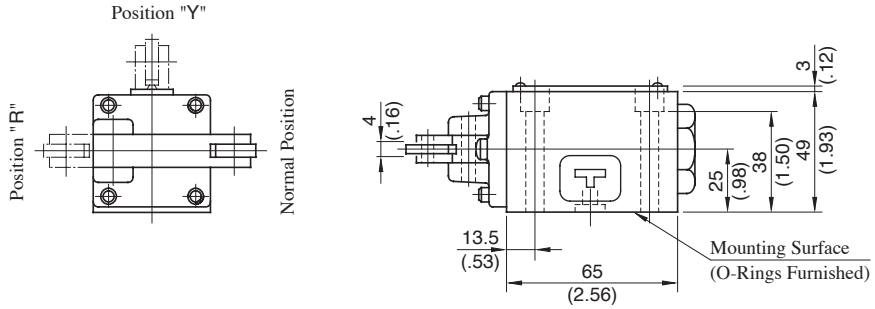

Note1: For the cam and roller travel, see DCT-01 in the previous page.

Note2: For the valve mounting surface dimensions, see the dimensional drawing of the sharable sub-plate in page 356.

DIMENSIONS IN MILLIMETRES (INCHES)

Mounting Surface: ISO 4401-AC-05-4-A

DCG-03-2B∗-∗-∗50/5090

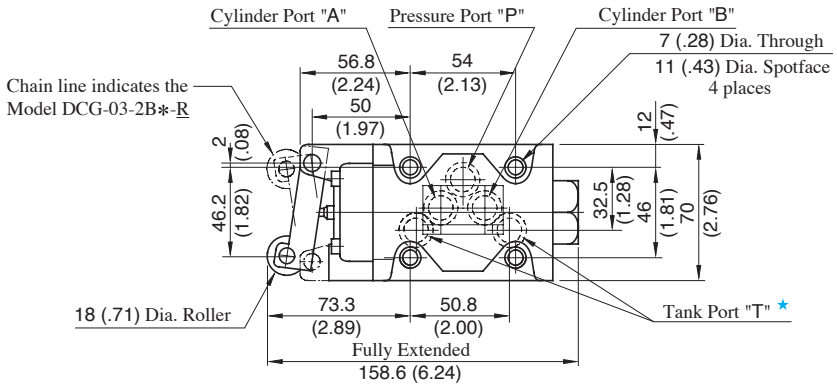

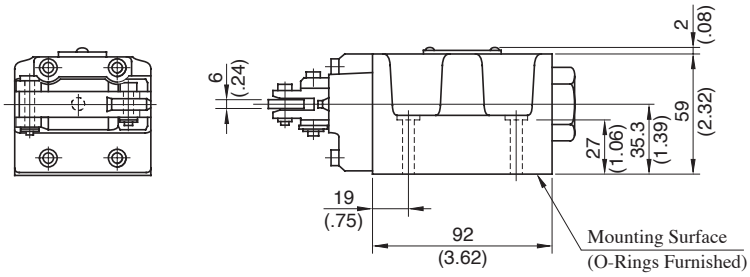

★. Although the tank port is shown on the left in our sub-plate, either may be used.

Note1: For the cam and roller travel, see DCT-03 in the previous page.

Note2: For the valve mounting surface dimensions, see the dimensional drawing of the sharable sub-plate in page 373.

List of Seals

DCT-01-2B∗-∗-40/4080/4090
DCG-01-2B∗-∗-40/4090

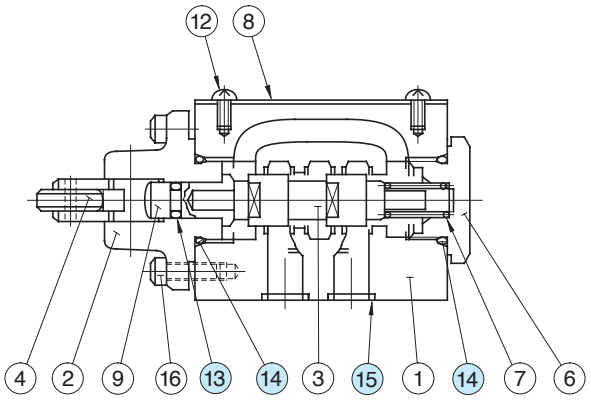

Item	Name of Parts	Part Numbers	Quantity	
			DCT-01	DCG-01
13	O-Ring	SO-NA-P5	1	1
14	O-Ring	SO-NB-P18	2	2
15	O-Ring	SO-NB-P9	0	4

Note: When ordering the o-rings, please specify the seal kit number from the table right.

● List of Seal Kit No.

Valve Mdel Numbers	Seal Kit Numbers
DCT-01-2B∗-∗-40/4080/4090	KS-DCT-01-40
DCG-01-2B∗-∗-40/4090	KS-DCG-01-40

DCT-03-2B∗-∗-50/5080/5090
DCG-03-2B∗-∗-50/5090

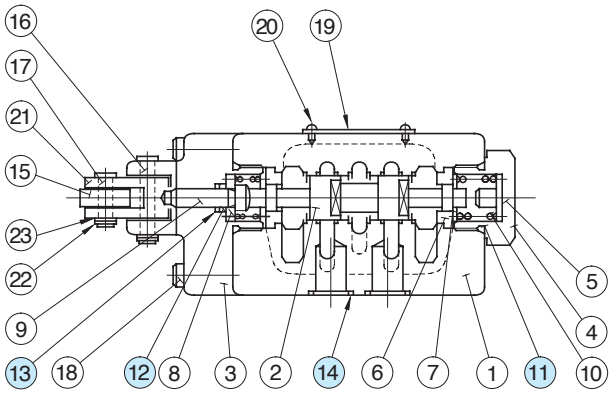

Item	Name of Parts	Part Numbers	Quantity	
			DCT-03	DCG-03
11	O-Ring	SO-NB-P21	2	2
12	O-Ring	SO-NA-P6	1	1
13	Back Up Ring	SO-BE-P6	1	1
14	O-Ring	SO-NB-A014	0	5

Note: When ordering the seals, please specify the seal kit number from the table right.

● List of Seal Kit No.

Valve Mdel Numbers	Seal Kit Numbers
DCT-03-2B∗-∗-50/5080/5090	KS-DCT-03-50
DCG-03-2B∗-∗-50/5090	KS-DCG-03-50

Poppet Type Directional Valves

Valve Type	Graphic Symbols	Max. Operating Pressure MPa (PSI)	Maximum Flow (U. S. GPM / L/min)	Page
Poppet Type Solenoid Operated Directional Valves	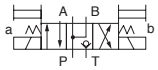	31.5 (4570)	DSLG−01	453
Multi Purpose Control Valves	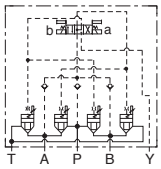	25 (3630)	DSLHG−04 DSLHG−06 DSLHG−10	459
Solenoid Operated Poppet Type Two-Way Valves	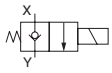	21 (3050)	CDSC−01	480
		14 (2030)	CDSC−03 CDST−03※ CDSG−03	
Shut-off Type Solenoid Operated Directional Valves	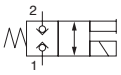	25 (3630)	DSPC−01 DSPG−01 DSPC−03 DSPG−03	489

Mounting Surface

Mounting surfacedimensions conform to ISO standard discribed in below table.

Name	Model Number	ISO Code of Mounting Surface
Shut-off Type Solenoid Operated Directional Valves	DSPG-01	ISO 4401-AB-03-4-A
	DSPG-03	ISO 4401-AC-05-4-A
	DSPC-01	ISO 7789 20-01-0-93
	DSPC-03	ISO 7789 27-01-0-93
Multi Purpose Control Cavles	DSLHG-04	ISO 4401-AD-07-4-A
	DSLHG-06	ISO 4401-AE-08-4-A
	DSLHG-10	ISO 4401-AF-10-4-A

Interchangeability in Installation between Current and New Design

Model change has been made on the following products.
The difference between current and new design has been described on the paragraph of "Interchangeability in Installation between Current and New Design". Refer to relevant pages on each series.

Name	Model Numbers		Mtg. Inter-changeability	Page	Main changes
	Current	New			
Multi Purpose Control Valves	DSLHG-04-∗-∗-12∗ DSLHG-06-∗-∗-12∗ DSLHG-10-∗-∗-12∗	DSLHG-04-∗-∗-13∗ DSLHG-06-∗-∗-13∗ DSLHG-10-∗-∗-13∗	Yes	—	Pilot valve (DSG-01) changed to design.
Solenoid Operated Poppet Type Two-Way Valves	CDS∗-03∗-C-∗-20∗	CDS∗-03∗-C-∗-21∗	Yes	488	The change of solenoid ratings.
Shut-offf Type Solenoid Operated Directional Valves	DSP∗-01-C-∗-10∗	DSP∗-01-C-∗-20∗	Yes	—	The change of solenoid.

Solenoid

Solenoid connector (DIN connector)

The solenoid connector is in accordance with the international standard ISO 4400 (Fluidpower System and components-Three-Pin electrical plug connectors-Characteristics and requirements.).

AC Solenoid

50-60 Hz common service solenoids do not require re-wiring when the applied frequency is changed.

DC Solenoid (K-series Solenoid)

K-series DC Solenoid which has a reputation for excellent DC control is employed.

1. The spark between the relay contacts has been eliminated and therefore the valve can be operated by miniature relays.
2. The surge voltage is approximately 10 % of that normally experienced.
3. Time lag on de-exercitation is reduced by approximately 50 %.

R Type Models with Current Rectifier and DC Solenoid

Specially designed DC solenoids and receptacle (or connector) containing AC-DC rectifier and transient peak suppressor are provided. Connection to be made to AC power source as with conventional AC solenoid. Remarkably high reliability and long life and other advantages including quiet valve operation. No over-heating of coil due to the spool sticking and protection against transient voltage peaks are assured.

Insulation Class of Solenoid

Model Numbers	Insulation Class
DSLG-01	Class H
DSLHG-04/06/10	
CDSC-01 CDS∗-03∗ DSP∗-01/03	

Poppet Type Directional Valves

These are Solenoid Operated Directional Valves of No Leak Type developed with the aim of responding the demand of the age including energy saving. Because these valves are of no leak type they allow the low viscosity hydraulic fluids to be used as well as the circuit construction which cannot be used by the conventional spool type directional valves because of too much internal leak of pressure oil. The use of the low viscosity hydraulic fluids reduces the pressure loss which can arise from the passage resistance of the hydraulic fluids, leading to the system energy saving.

Poppet Type Solenoid Operated Directional Valves

- High Response High Reliability
  Because these valves are of poppet type, there is no overlap, high response can be achieved. At the same time, hydraulic lock is eliminated.

- No Leak
  Sheet type seal has been adopted and internal leak is greatly reduced.

- ISO Comformant Mounting Surface
  Because the mounting surface conforms to ISO 4401-AB-03-4-A, there is an interchangeability with the conventional valves. This makes it possible to use these valves in combination with 01 Series Modular Valves.

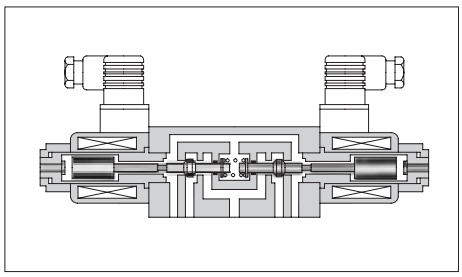

Specifications

Model Numbers	Max. Flow L/min (U.S.GPM)	Max. Operating Pressure MPa (PSI)	Max. T-Line Back Pressure MPa (PSI)	Max. Changeover Frequency min^{-1} {Cycles/Min}	Internal leakage cm^3/min (cu. in./min)	Approx. Mass kg (lbs.)	Graphic Symbols
DSLG-01-3-C-∗-N-11	16 (4.2)	31.5 (4570)	16 (2320)	240	Or Less 0.5 ★1 (.03)	1.9 (4.2)	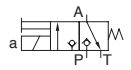
DSLG-01-3-O-∗-N-11							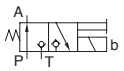
DSLG-01-4-O-∗-N-11					Or Less 1 ★2 (.06)	3.7 (8.2)	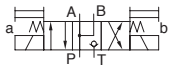

★1. This is the leakage towards "T" port in A port block at "P" port pressure 14 MPa (2030 PSI).
★2. This is the leakage towards "T" port in A•B port block at "P" port pressure 14 MPa (2030 PSI).

Solenoid Ratings

Electric Source	Coil Type	Frequency (Hz)	Voltage (V)		Current & Power at Rated Voltage	
			Source Rating	Serviceable Range	Holding (A)	Power (W)
DC (K Series)	D12	—	12	10.8 - 13.2	2.45	29
	D24	—	24	21.6 - 26.4	1.23	
AC→DC Rectified	R100	50/60	100	90 - 110	0.33	29
	R200	50/60	200	180 - 220	0.16	

Model Number Designation

F-	DSLG	-01	-4	-O	-D24	-N	-11	*
Special Seals	Series Number	Valve Size	Number of Port	Function	Coil Type	Type of Electrical Conduit Connection	Design Number	Design Standards
F: Special Seals for Phosphate Ester Type Fluids (Omit if not required)	**DSLG**: Poppet Type Solenoid Operated Directional Valve (Sub-plate Mtg.)	**01**	**3**: 3 Port	**O**: Normally Open **C**: Normally Closed	DC **D12, D24** AC→DC **R100** **R200**	**N**: Plug-in Connector	**11**	Refer to ★
			4: 4 Port	**O**: Normally Open				

★ Design Standards: None ..... Japanese Standard "JIS" and European Design Standard
90 ..... N. American Design Standard

Sub-plate

Piping Size	Japanese Standard "JIS"		European Design Std.		N. American Design Std.		Approx. Mass kg (lbs.)
	Sub-plate Model No.	Thread Size	Sub-plate Model No.	Thread Size	Sub-plate Model No.	Thread Size	
1/8	DSGM-01-31	Rc 1/8	DSGM-01-3180	1/8 BSP.F	DSGM-01-3190	1/8 NPT	0.8 (1.8)
1/4	DSGM-01X-31	Rc 1/4	DSGM-01X-3180	1/4 BSP.F	DSGM-01X-3190	1/4 NPT	0.8 (1.8)
3/8	DSGM-01Y-31	Rc 3/8	—	—	DSGM-01Y-3190	3/8 NPT	0.8 (1.8)

● Sub-plates are available. Specify the sub-plate model number from the table above. When sub-plates are not used, the mountingsurface should have a good machined finish.

Mounting Bolts

Four socket head cap screws in the table below are included.

Descriptions	Socket Head Cap Screw (4 pcs.)	Tightening Torque
Japanese Standard "JIS" European Design Standard	M5 × 45 Lg.	5-7 Nm (44-62 in. lbs.) [Applicable to working pressure more than 25 MPa (3630 PSI) : 6-7 Nm (53-62 in. lbs.)]
N. American Design Standard	No. 10-24 UNC × 1-3/4 Lg.	

Instructions

● **Mounting**
No mounting restrictions for any models.

● **Solenoid Shifting**
On double solenoid valves do not energise both at the same time.

● **Valve Tank Port**
Avoid connecting the valve tank port to a line with possible surge pressure.

● **Operating Force by Manual Actuator**
Take care as the operating force by the manual actuator increases in proportion to the tank line back pressure. (See the graph right.)

Operating Force by Manual Actuator

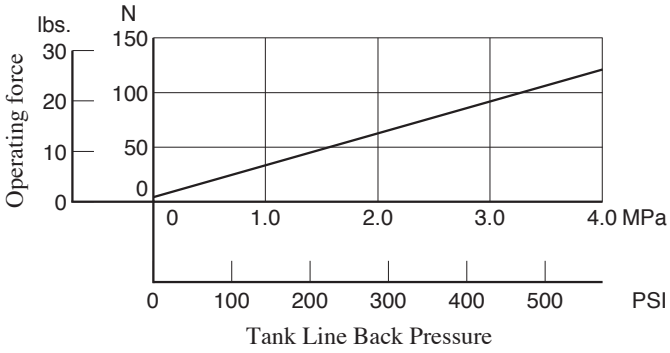

Pressure Drop

Hydraulic Fluid: Viscosity 35 mm^2/s (164 SSU), Specific Gravity 0.850

● 4 Port Valve

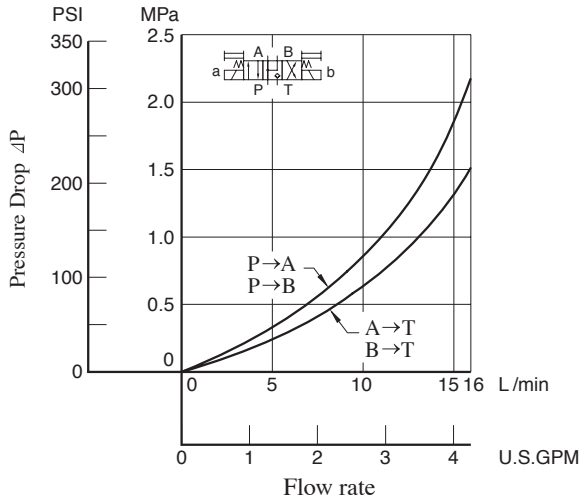

● 3 Port Valve

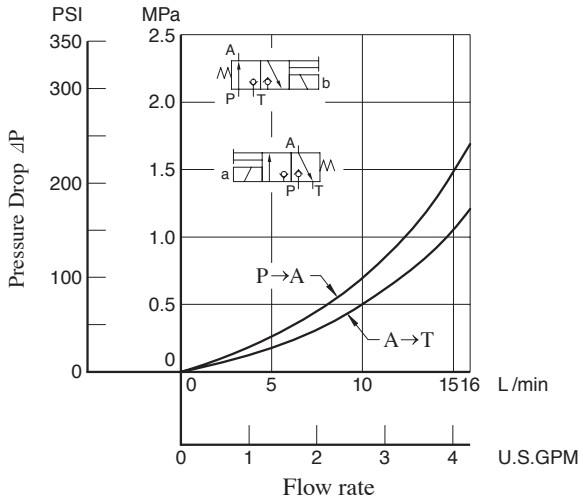

● For any other viscosity, multiply the factors in the table below.

Viscosity	mm^2/s	15	20	30	40	50	60	70	80	90	100
	SSU	77	98	141	186	232	278	324	371	417	464
Factor		0.81	0.87	0.96	1.03	1.09	1.14	1.19	1.23	1.27	1.30

● For any other specific gravity (G'), the pressure drop (⊿P') may be obtained from the formula below.

$$\Delta P' = \Delta P\ (G'/0.850)$$

Changeover Time

Changeover time varies according to hydraulic circuit of the model actually used and conditions. An example of measurement is given in the figure below.

● Test Circuit and Conditions

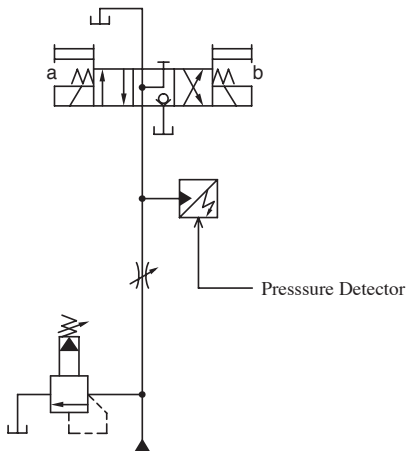

Pressure: 21 MPa (3050 PSI)
Flow Rate: 16 L/min (4.2 U.S.GPM)
Voltage: Rated voltage

● Result of Measurement

(DC Solenoid)

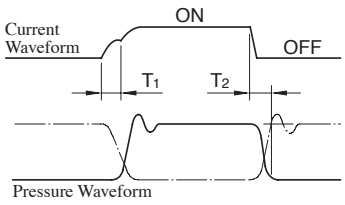

(AC→DC Rectified)

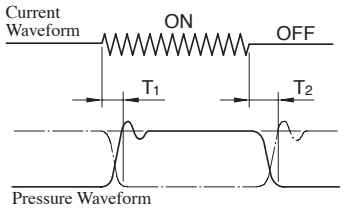

Note: Alternate long and short dash lines in the pressure waveform figures indicate the waveforms for Normally Closed Type 3 Port Valves.

Solenoid Type	Model Numbers	Time (ms)		Remarks
		T_1	T_2	
DC	DSLG-01-4-O-D∗	55	30	4 port valve, normally open
	DSLG-01-3-O-D∗	55	30	3 port valve, normally open
	DSLG-01-3-C-D∗	70	25	3 port valve, normally closed
AC→DC Rectified	DSLG-01-4-O-R∗	55	150	4 port valve, normally open
	DSLG-01-3-O-R∗	55	150	3 port valve, normally open
	DSLG-01-3-C-R∗	70	150	3 port valve, normally closed

4 Port Valve

Mounting Surface:
ISO4401-AB-03-4-A

DIMENSIONS IN MILLIMETRES (INCHES)

Normally Open: DSLG-01-4-O-⁎-N-11/1190

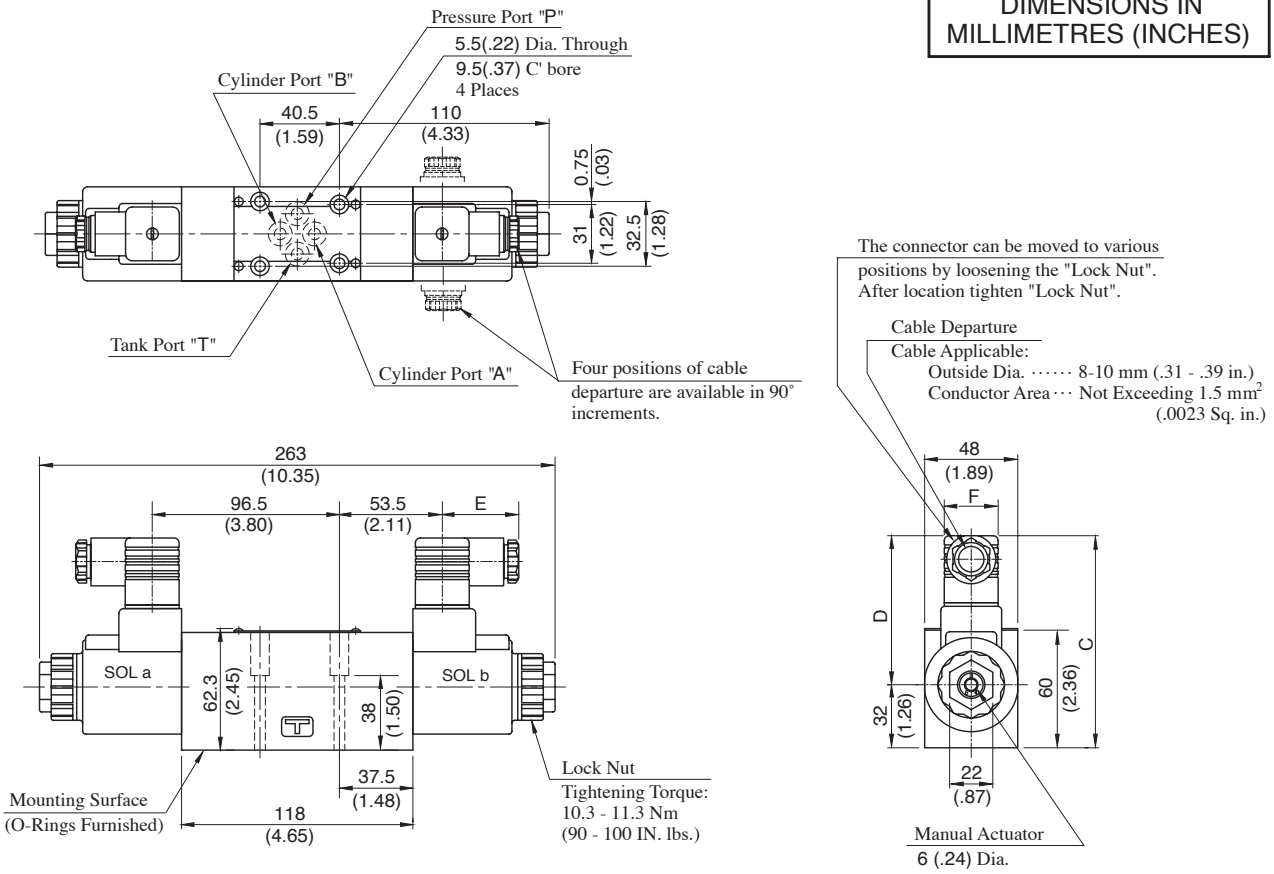

Model Numbers	Dimensions mm (Inches)			
	C	D	E	F
DSLG-01-4-O-D⁎-N	108 (4.25)	64 (2.52)	39 (1.54)	27.5 (1.08)
DSLG-01-4-O-R⁎-N	111 (4.37)	57.2 (2.25)	51 (2.01)	34 (1.34)

- The information on 3 Port Valves is provided in the following page.

Note: For the valve mounting surface dimensions, see the dimensional drawing of the sharable sub-plate in page 356.

Mounting Surface:
ISO4401-AB-03-4-A

3 Port Valves

DIMENSIONS IN MILLIMETRES (INCHES)

Normally Open Type:
DSLG-01-3-O-∗-N-11/1190

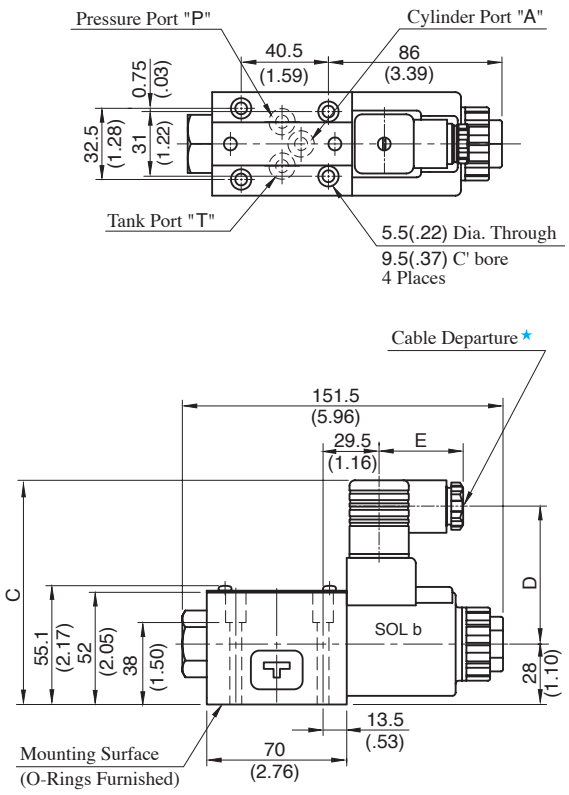

Normally Closed Type:
DSLG-01-3-C-∗-N-11/1190

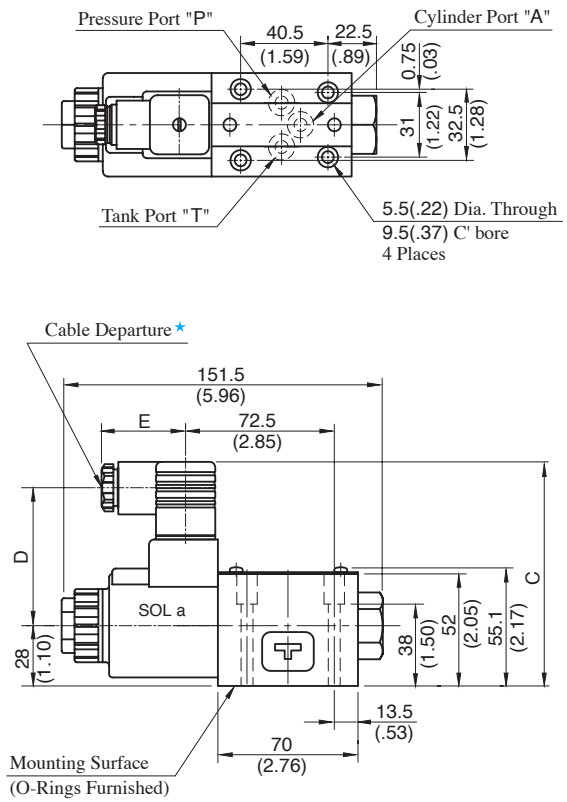

Model Numbers	Dimensions mm (Inches)		
	C	D	E
DSLG-01-3-∗-D∗-N	104 (4.09)	64 (2.52)	39 (1.54)
DSLG-01-3-∗-R∗-N	107 (4.21)	57.2 (2.25)	51 (2.01)

★ Cable departure position can be changed. See "4 Port Valves" in the previous page for the details.

Note: For the valve mounting surface dimensions, see the dimensional drawing of the sharable sub-plate in page 356.

List of Seals, Solenoid Ass'y and Connectors

4 Port Valve

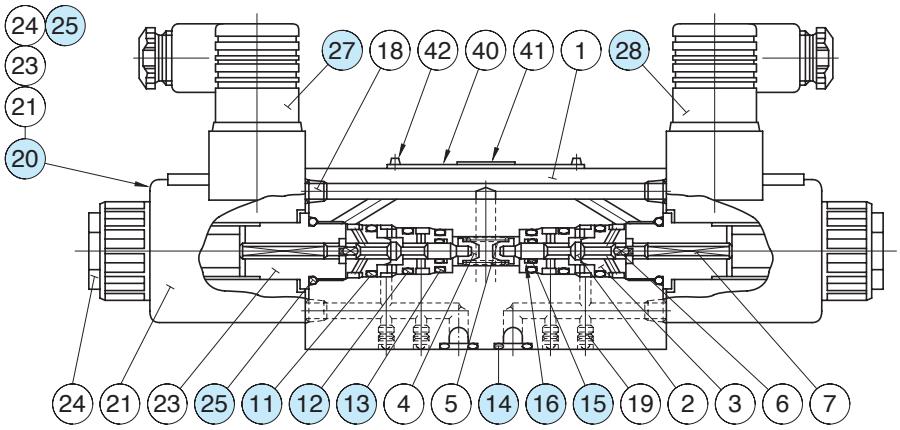

3 Port Valve

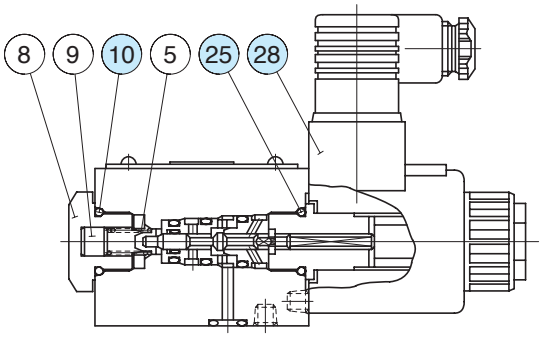

List of Seals

Item	Name of Parts	Part Numbers	Quantity	
			4 Port Valve	3 Port Valve
10	O-Ring	SO-NB-P18	—	1
11	O-Ring	SO-NB-P14	2	1
12	O-Ring	SO-NB-P12	2	1
13	O-Ring	SO-NB-P11	2	1
14	O-Ring	SO-NB-P9	4	3
15	O-Ring	SO-NA-P5	2	1
16	Back Up Ring	2705-VK414322-8	2	1
25	O-Ring	SO-NB-P18	2	1

Note 1: O-Ring of item ㉕ are included in solenoid assembly.
2: When ordering the seals, specify the seal kit number from the table right.

Change of supply voltage

The supply voltage can be changed by replacing the coil ㉑ only.

List of Seal Kits

Valve Model Number s	Seal Kit Numbers
DSLG-01-3-O-∗-N-11∗	KS-DSLG-01-3-N-11
DSLG-01-3-C-∗-N-11∗	
DSLG-01-4-O-∗-N-11∗	KS-DSLG-01-4-N-11

List of Solenoid Ass'y and Connectors

Valve Model No .	⑳ Solenoid Ass'y No.	㉑ Coil No.	㉗ Connector No.	㉘ Connector No.
DSLG-01-∗-∗-D12-N-11∗	SD1L-12-N-20	C-SD1-12-N-60	GDM-211-A-11	GDM-211-B-11
DSLG-01-∗-∗-D24-N-11∗	SD1L-24-N-20	C-SD1-24-N-60		
DSLG-01-∗-∗-R100-N-11∗	SD1L-100-N-20	C-SR1-100-N-60	GDME-211-R-A-10	GDME-211-R-B-10
DSLG-01-∗-∗-R200-N-11∗	SD1L-200-N-20	C-SR1-200-N-60		

Multi Purpose Control Valves

The Yuken Multi-Purpose Control Valves Comply with The Needs of Reducing Cost and Size of Your Machine

YUKEN's Multi Purpose Control Valves are compound valves composed of the main valve having four poppets, 1/8 Solenoid Operated Directional Valves for pilot and Pilot Selector Valves. This valve is multifunctionalized by having individual poppet had functions such as directional control, flow control or pressure control according to the combination of the main valve and pilot selector valve.

Features

- **Multi-purpose control valves**
  The valves combine three functions of directional control, flow control and of pilot operated check valve (or counterbalance valve). The valves contribute for reducing a number of valves in applications and space for installation and then eventually leads to reduction in size and cost of your machines.
- **Quick response, High reliability**
  Changeover response time is very quick as the valves are poppet type, there is no over-lap.
  No hydraulic lock occurs as there is no leakage of pressurised oil from the seat parts.
- **Easy to reduce shock in your hydraulic system**
  By selecting proper diameter of orifice for pilot, the open/close timing of the flow passage can be set freely. Therefore, smooth starting and stopping of actuator can be done combined with using shockless type poppet. Noise of ON/OFF and vibration of piping in hydraulic system can be also reduced.
- **For regenerative circuit**
  4 position-4 way type, which is to compose regenerative circuit, is available. By adopting regenerative circuit, gaining fast feed speed by using smaller volume pump is possible. Therefore saving electric power of system is possible.
- **The mounting dimensions are conformed with ISO standard**
  The valves are interchangeable with our conventional valves in mounting.

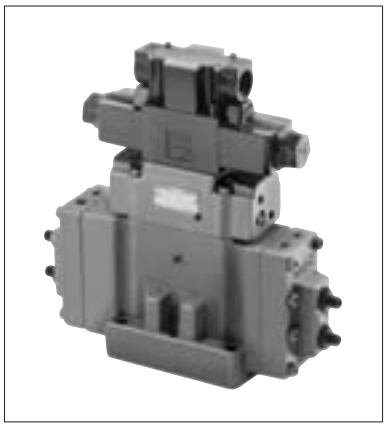

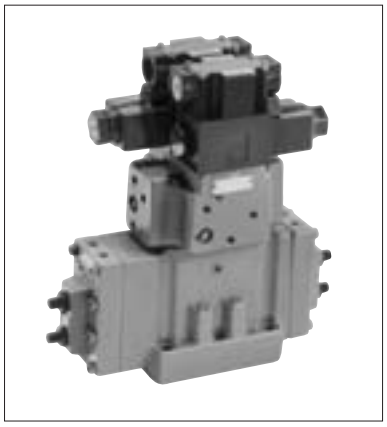

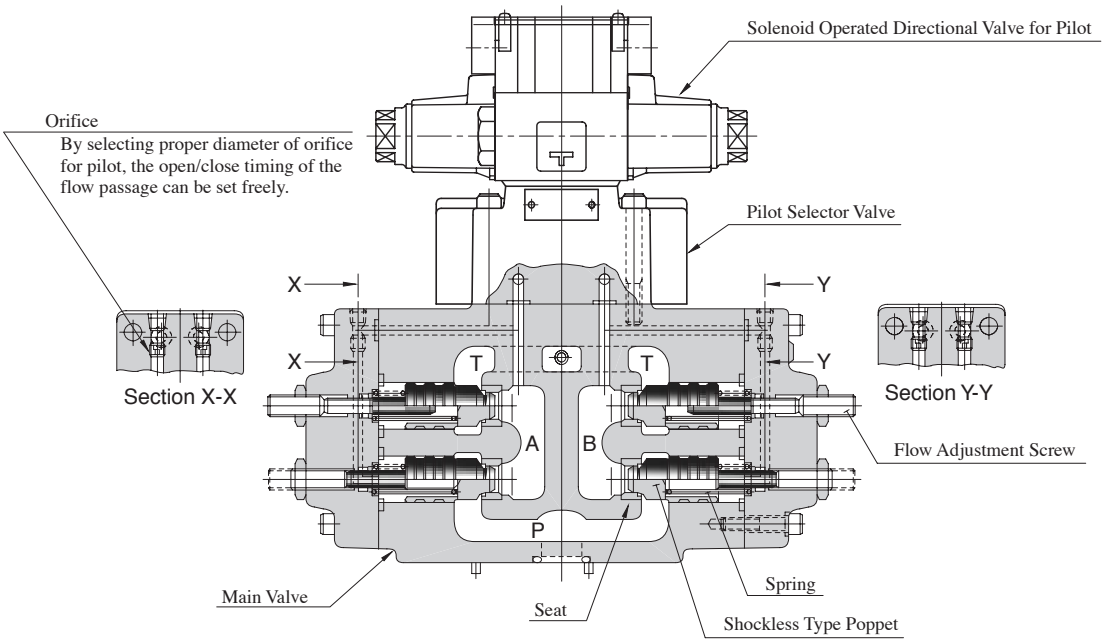

Specifications

Model Numbers	Max. Flow L/min (U.S.GPM)	Max. Operating Pressure MPa (PSI)	Max. Pilot Pressure MPa (PSI)	Max. T-Line Back Pres. MPa (PSI)	Pressure Adj. Range of Counterbalance MPa (PSI)	Ratio of Poppet Area (Seat Area: Annular Area) Direction & Flow Control	Ratio of Poppet Area (Seat Area: Annular Area) Pressure Control	Approx. Mass kg (lbs.)
DSLHG-04-1-∗-13∗	150 (39.6)	25 (3630)	25 (3630)	16 (2320)	—	1:1	—	15 (33)
DSLHG-04-2-∗-13∗								15 (33)
DSLHG-04-3-∗-13∗								19 (42)
DSLHG-04-4∗-∗-∗-13∗	150 {100}★★ (39.6 {26.4})				Refer to Model No. Designation	1:1	24:1	20 (44)
DSLHG-04-5∗-∗-∗-13∗								22.5 (50)
DSLHG-06-1-∗-13∗	300 (79.3)	25 (3630)	25 (3630)	16 (2320)	—	1:1	—	26.5 (59)
DSLHG-06-2-∗-13∗								26.5 (59)
DSLHG-06-3-∗-13∗								28 (62)
DSLHG-06-4∗-∗-13∗	300 {200}★★ (79.3 {52.8})				Refer to Model No. Designation	1:1	24:1	31 (68)
DSLHG-06-5∗-∗-13∗								34.5 (76)
DSLHG-10-1-∗-13∗	500 (132)	25 (3630)	25 (3630)	16 (2320)	—	1:1	—	59 (130)
DSLHG-10-2-∗-13∗								59 (130)
DSLHG-10-3-∗-13∗								62 (137)
DSLHG-10-4∗-∗-13∗	500 {300}★★ (132 {79.3})				Refer to Model No. Designation	1:1	24:1	63.5 (140)
DSLHG-10-5∗-∗-13∗								67 (148)

★In case of counterbalance function line, maximum flow is limited to the values in brackets.

Solenoid Ratings

Refer to Pilot Valve (DSG-01 Series Solenoid Operated Directional Valve) Solenoid Ratings on page 345.

Model Number Designation

F-	DSLH	G	-04	-4	A	-B
Special Seals	Series Number	Type of Mounting	Valve Size	Type of Pilot Control	Counterbalance Function	Pressure Adj. Range of Counterbalance MPa (PSI)
F: For phosphate ester type fluids (Omit if not required)	**DSLH**: Multi-Purpose Control Valve	**G**: Sub-plate Mounting	**04**	**1** **2** **3**	—	—
				4 **5**	**A** : AT Line **W**: AT & BT Lines	**B**: ∗★1- 7 (∗★1- 1020) **H**: 6 - 25 (870 - 3630)
			06	**1** **2** **3**	—	—
				4 **5**	**A** : AT Line **W**: AT & BT Lines	**None**: ∗★1- 25 (∗★1- 3630)
			10	**1** **2** **3**	—	—
				4 **5**	**A** : AT Line **W**: AT & BT Lines	**None**: ∗★1- 25 (∗★1- 3630)
				See page 462 for functions and purpose of use.		

★1. See "Min. Adjustment Pressure", page 464, for information on minimum adjustment pressure.

Sub-plate

Valve Model Numbers	Japanese Standard "JIS"			European Design Standard			N. American Design Standard		
	Sub-plate Model Numbers	Thread Size	Approx. Mass kg (lbs.)	Sub-plate Model Numbers	Thread Size	Approx. Mass kg (lbs.)	Sub-plate Model Numbers	Thread Size	Approx. Mass kg (lbs.)
DSLHG-04	DHGM-04-20 DHGM-04X-20	Rc 1/2 Rc 3/4	4.4 (9.7) 4.1 (9.0)	DHGM-04-2080 DHGM-04X-2080	1/2 BSP.F 3/4 BSP.F	4.4 (9.7) 4.1 (9.0)	DHGM-04-2090 DHGM-04X-2090	1/2 NPT 3/4 NPT	4.4 (9.7) 4.1 (9.0)
DSLHG-06	DHGM-06-50 DHGM-06X-50	Rc 3/4 Rc 1	7.4 (16.3) 7.4 (16.3)	DHGM-06-5080 DHGM-06X-5080	3/4 BSP.F 1 BSP.F	8.5 (18.7) 8.5 (18.7)	DHGM-06-5090 DHGM-06X-5090	3/4 NPT 1 NPT	7.4 (16.3) 7.4 (16.3)
DSLHG-10	DHGM-10-40 DHGM-10X-40	Rc 1-1/4 Rc 1-1/2	21.5 (47.4) 21.5 (47.4)	DHGM-10-4080 DHGM-10X-4080	1-1/4 BSP.F 1-1/2 BSP.F	21.5 (47.4) 21.5 (47.4)	DHGM-10-4090 DHGM-10X-4090	1-1/4 NPT 1-1/2 NPT	21.5 (47.4) 21.5 (47.4)

- Sub-plates are available. Specify the sub-plate model number from the table above.
  When sub-plates are not used, the mounting surface should have a good machined finish.
- These sub-plates are sharable with those for DSHG Series Solenoid Controlled Pilot Operated Directional Valve. For dimensions, see pages 401 to 403.

Mounting Bolts

Socket head cap screws in the table below are included.

Model Numbers	Socket Head Cap Screw			
	Japanese Standard "JIS" and European Design Standard	N. American Design Standard	Qty.	Tightening Torque Nm (In. lbs.)
DSLHG-04	M6 × 40 Lg. M10 × 45 Lg.	1/4-20 UNC × 1-1/2 Lg. 3/8-16 UNC × 1-3/4 Lg.	2 4	12-15 (106-133) 58-72 (513-637)
DSLHG-06	M12 × 60 Lg.	1/2-13 UNC × 2-1/2 Lg.	6	100-123 (885-1089)
DSLHG-10	M20 × 75 Lg.	3/4-10 UNC × 3 Lg.	6	473-585 (4186-5177)

-E	T	-A100	-C	-N	-13	*
Pilot Connection	Drain Connection ★2	Coil Type	Manual Override	Electrical Conduit Connection	Design Number	Design Standards
None: Internal Pilot **E**: External Pilot	**None**: External Drain **T**: Internal Drain	AC: **A100** **A120** **A200** **A240** DC: **D12** **D24** **D48** R: (AC→DC) **R100** **R200**	**None**: Manual Override Pin **C**: Push Button & Lock Nut (Options)	**None**: Terminal Box Type **N**: Plug-in Connector Type	**13** **13** **13**	**None**: Japanese Std. "JIS" **90**: N.American Design Std. **None**: Japanese Std. "JIS" & European Design Std. **90**: N.American Design Std.

★2. In case of lines with counterbalance function (-4 A/W, -5 A/W), External Drain must be selected for Drain Connection.

The coil type numbers in the shaded column are handled as optional extras. In case these coils are required to be chosen, please confirm the time of delivery with us before ordering.

Function and Purpose of Use

Type of Pilot Control	Model No.	Graphic Symbols	Function: Directional Control	Function: Flow Control	Function: Pilot Operated Check Valve / Pressure Control	Purpose of Use
Type "1"	DSLHG-∗-1	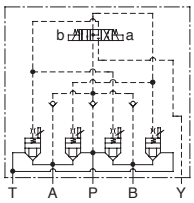		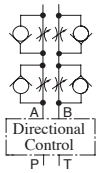 Both Metre-in and Metre-out are possible	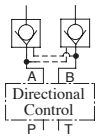 To get a function of pilot operated check valve, the following conditions should be fulfilled. ● Internal pilot type ("P" port pressure) ≧ ("A""B" ports pressure) ● External pilot type (Pilot pressure) ≧ ("A""B" ports pressure)	● Functions as Three Position Four-Way Valve (Spring Centred Model).
Type "2"	DSLHG-∗-2	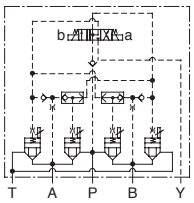	Position #1 #2 #3 SOL a ON OFF OFF SOL b OFF OFF ON			● Functions as Three Position Four-Way Valve (Spring Centred Model) as well as Two Position Valve which uses positions #1 and #3. ● Effective especially when the actuator has inertia force.
Type "3"	DSLHG-∗-3	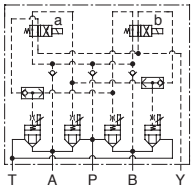	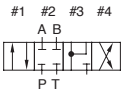 Position #1 #2 #3 #4 SOL a ON OFF ON OFF SOL b OFF OFF ON ON			● Functions as Four Position Four-Way Valve. ● Regenerative circuit can be constructed at the Position #3.
Type "4"	DSLHG-∗-4A	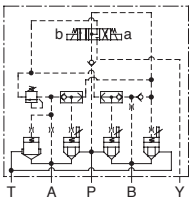	Position #1 #2 #3 SOL a ON OFF OFF SOL b OFF OFF ON		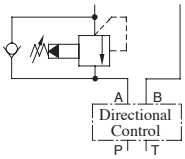	● Pressure control function (counterbalance valve) has been added to Type "2" to make this type.
	DSLHG-∗-4W	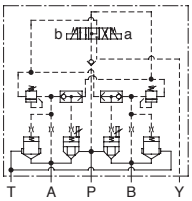			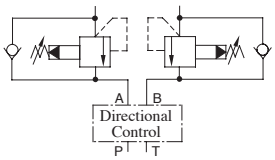	● Used to control the back pressure of the actuator.
Type "5"	DSLHG-∗-5A	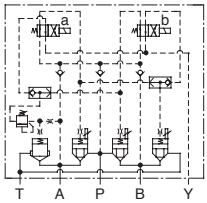	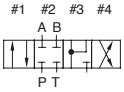 Position #1 #2 #3 #4 SOL a ON OFF ON OFF SOL b OFF OFF ON ON		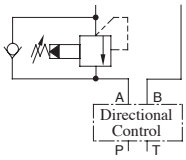	● Pressure control function (counterbalance valve) has been added to Type "3" to make this type.
	DSLHG-∗-5W	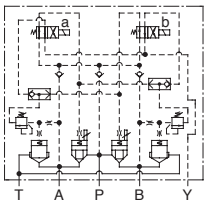			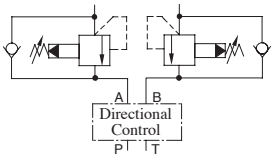	● Used to control the back pressure of the actuator.

Instructions

- **Pilot Pressure**
  Pilot pressure of external pilot drain models must always exceed the pressure of the main pressure port "P".

- **Pilot Drain Port**
  Avoid connecting the pilot drain port to a line with possible surge pressure.

- **Drain Connection when with Counterbalance Function**
  When a valve having counterbalance function is used with internal drain type, the counterbalance pilot valve is subjected to pressure fluctuation and the pressure setting becomes unstable. For this reason, be sure to use external drain type valve.

- **Flow Adjustment**
  To perform the flow adjustment, loosen the lock nut, then turn the flow adjustment screw clockwise to decrease the flow. Be sure to re-tighten the lock nut after the adjustment.

- **Pressure Adjustment**
  To perform the pressure adjustment, loosen the lock nut, then turn the pressure adjustment screw clockwise to increase the pressure. Be sure to re-tighten the lock nut after the adjustment.

- **Min. Controlled Flow for Types "2" and "4A" at The Time of Metre-out Control**
  Minimum controlled flow at the time of metre-out control is limited (this does not happen during metre-in control) as shown in the figure below only in the case of pilot control types "2" (DSLHG-∗-2) and "4A" (DSLHG- ∗-4A).

Min. Controlled Flow for Types "2" and "4A" at The Time of Metre-out Control

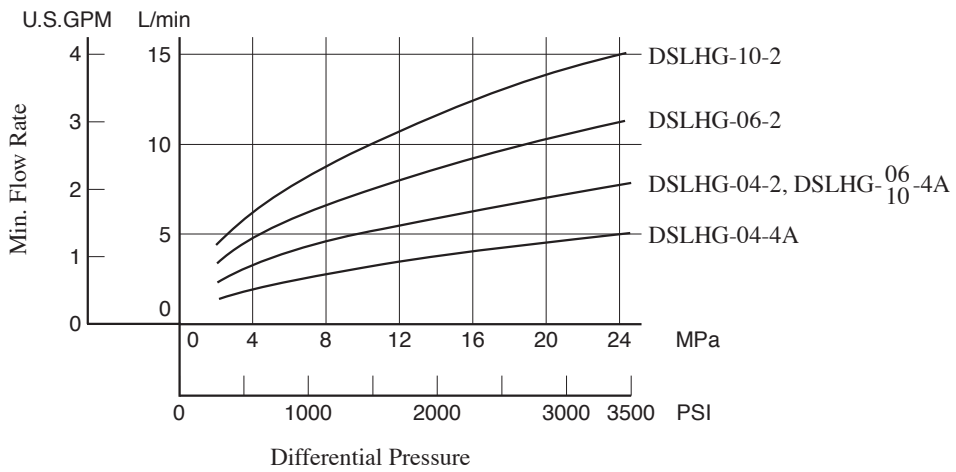

Hydraulic Fluid: Viscosity 35 m m²/s (164 SSU), Specific Gravity 0.850

Pressure Drop

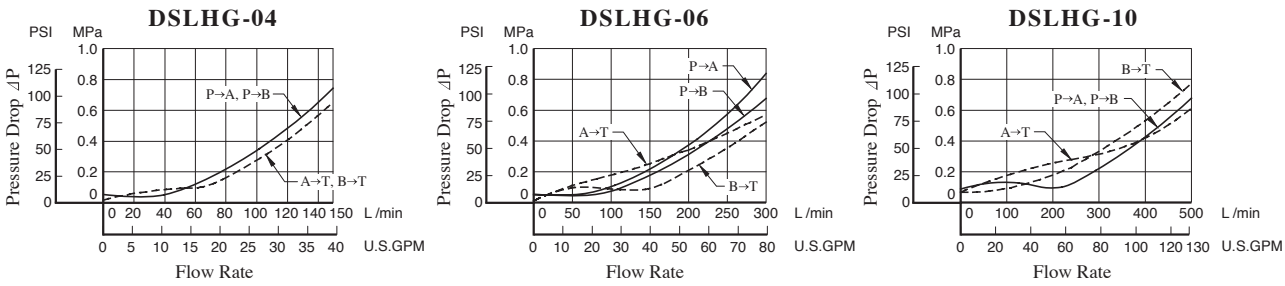

- For any other viscosity, multiply the factors in the table below.

Viscosity	mm²/s	15	20	30	40	50	60	70	80	90	100
	SSU	77	98	141	186	232	278	324	371	417	464
Factor		0.81	0.87	0.96	1.03	1.09	1.14	1.19	1.23	1.27	1.30

- For any other specific gravity (G'), the pressure drop (⊿P') may be obtained from the formula below.

$$\Delta P' = \Delta P\ (G'/0.850)$$

Flow vs. Adjustment Revolutions

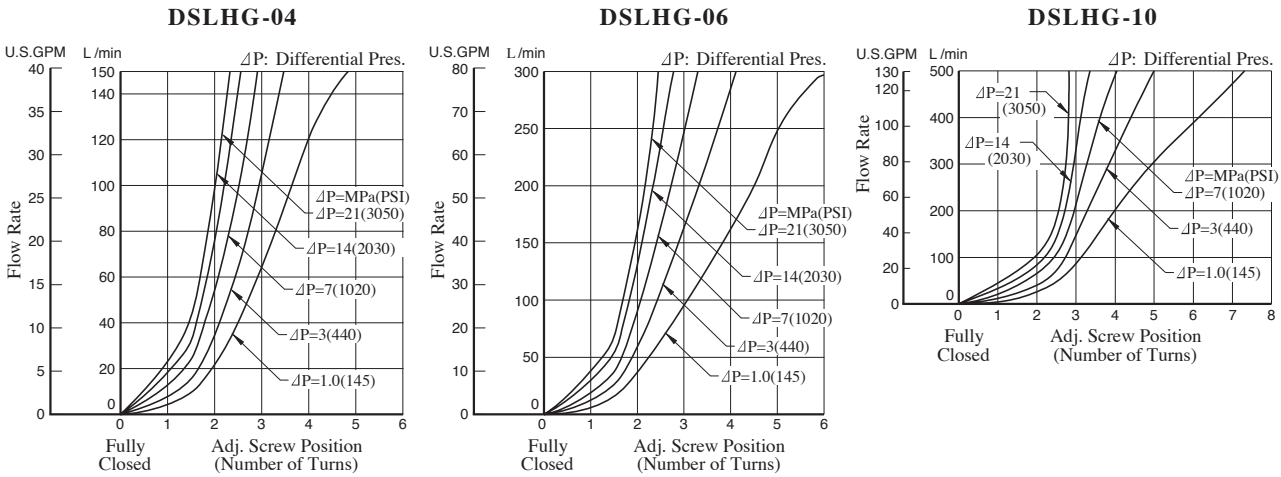

Minimum Adjustment Pressure

Because the minimum adjustment pressure varies with the tank line back pressure, add the tank line back pressure to the value on the following lines.

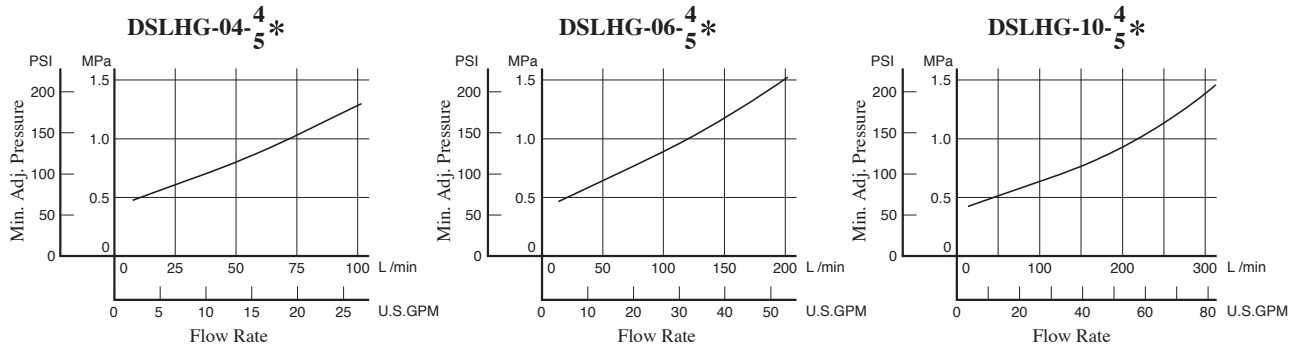

Terminal Box Type

Mounting Surface: ISO 4401-AD-07-4-A

DSLHG-04-$\frac{1}{2}$-∗-13/1390

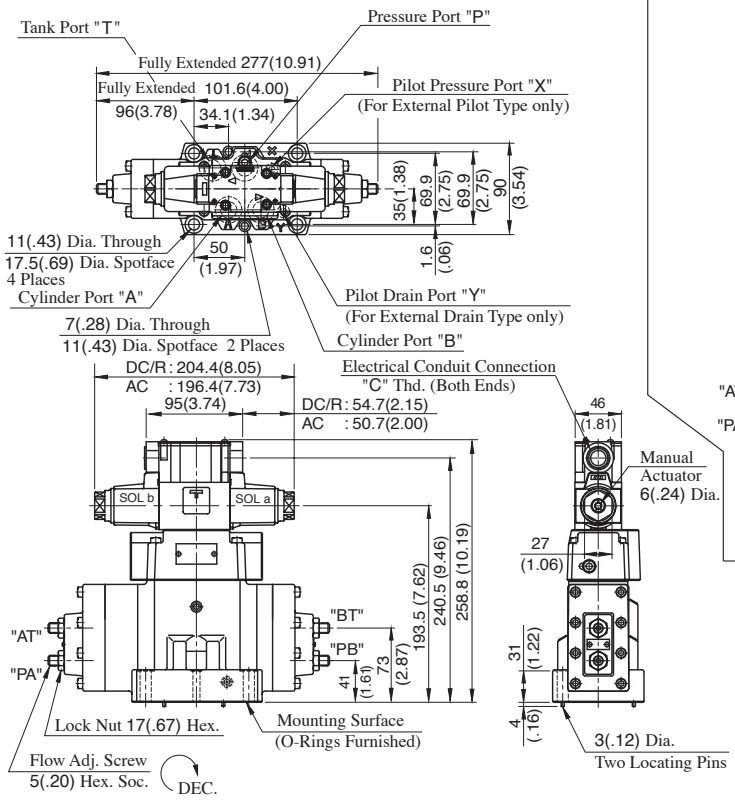

DSLHG-04-3-∗-13/1390

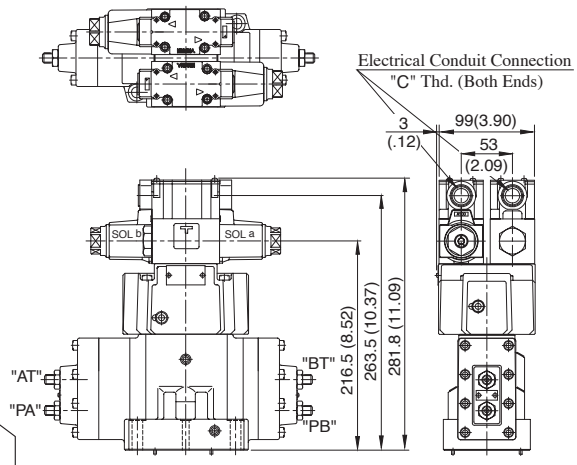

For other dimensions, see "DSLHG-04-$\frac{1}{2}$" drawing left.

Model Numbers	"C" Thd.
DSLHG-04-∗-∗-13	G 1/2
DSLHG-04-∗-∗-1390	1/2 NPT

DIMENSIONS IN MILLIMETRES (INCHES)

DSLHG-04-4W-∗-∗-13/1390

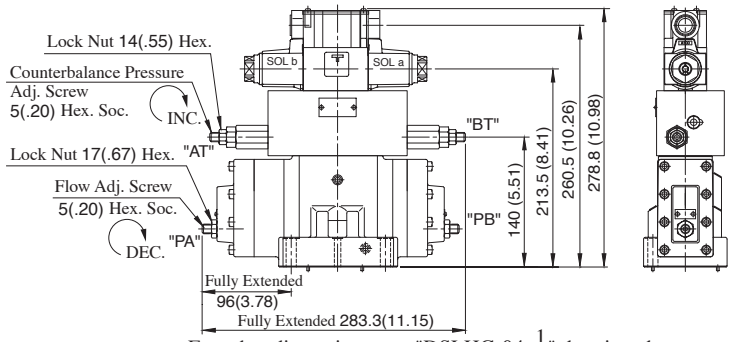

For other dimensions, see "DSLHG-04-$\frac{1}{2}$" drawing above.

DSLHG-04-4A-∗-∗-13/1390

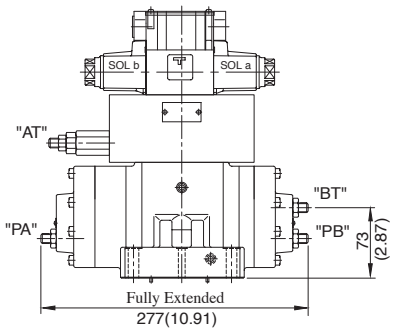

For other dimensions, see "DSLHG-04-4W" drawing left.

DSLHG-04-5W-∗-∗-13/1390

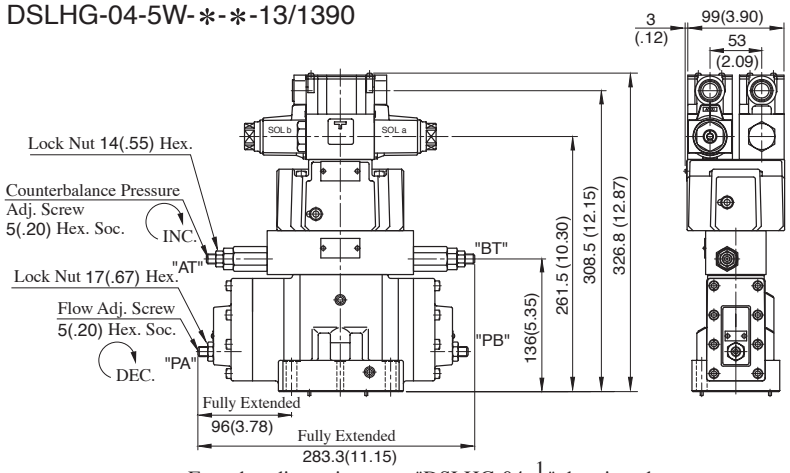

For other dimensions, see "DSLHG-04-$\frac{1}{2}$" drawing above.

DSLHG-04-5A-∗-∗-13/1390

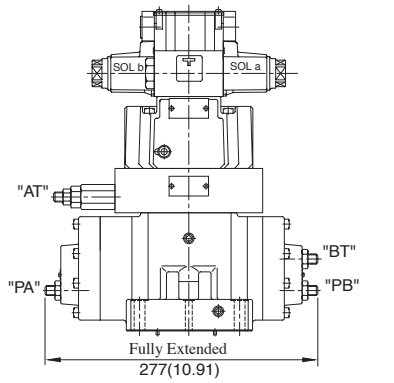

For other dimensions, see "DSLHG-04-5W" drawing left.

E

Multi Purpose Control Valves

DSLHG-04-$\frac{1}{2}$-∗-N-13/1390

Plug-in Connector Type

Mounting Surface:
ISO 4401-AD-07-4-A

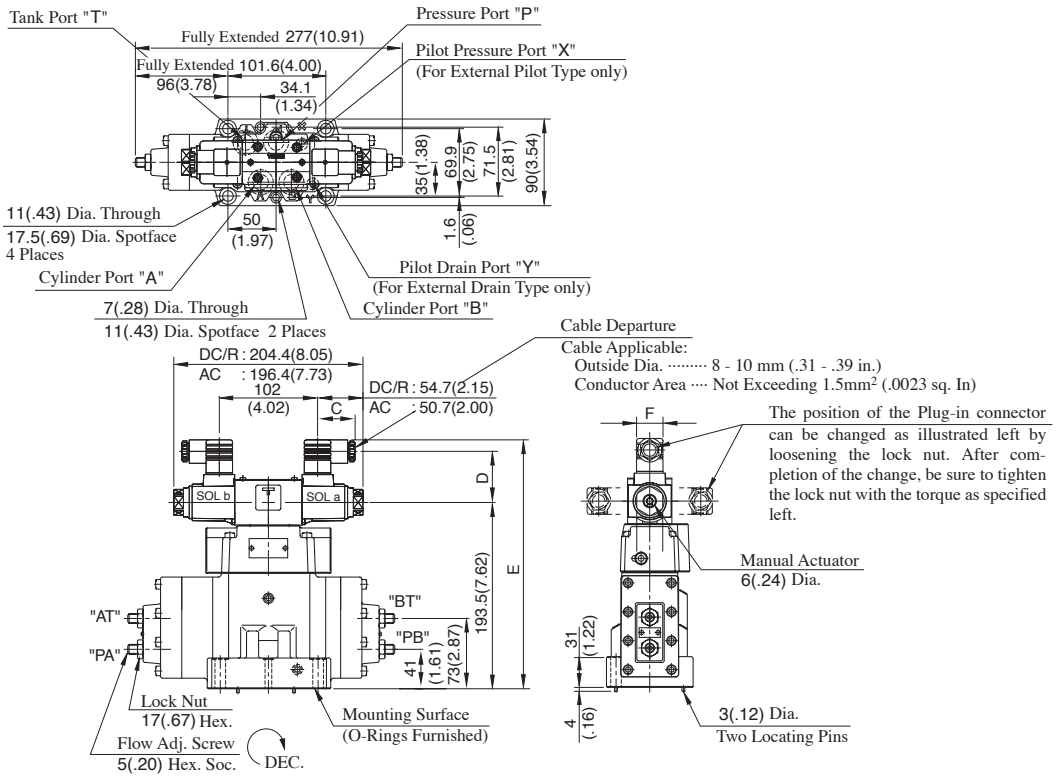

Model Numbers	Dimensions mm (Inches)			
	C	D	E	F
DSLHG-04-∗-A∗-N	39 (1.54)	53 (2.09)	258.5(10.18)	27.5 (1.08)
DSLHG-04-∗-D∗-N	39 (1.54)	64 (2.52)	269.5(10.61)	27.5 (1.08)
DSLHG-04-∗-R∗-N	53 (2.09)	57.2 (2.25)	272.5(10.73)	34 (1.34)

DSLHG-04-3-∗-N-13/1390

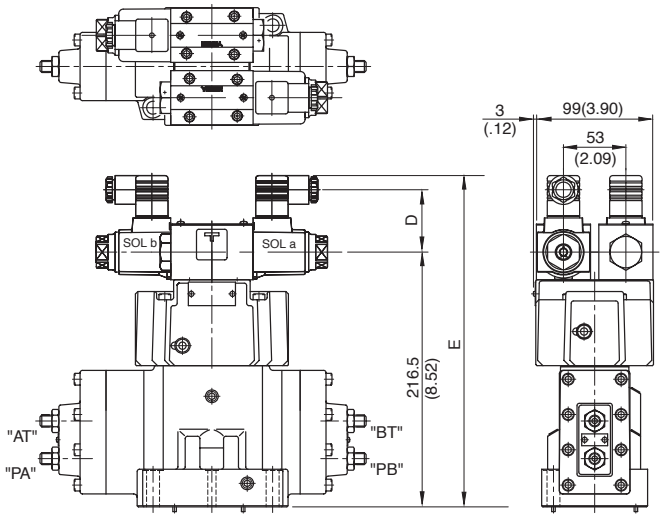

Model Numbers	Dimensions mm (Inches)	
	D	E
DSLHG-04-3-A∗-N	53 (2.09)	281.5 (11.08)
DSLHG-04-3-D∗-N	64 (2.52)	292.5 (11.52)
DSLHG-04-3-R∗-N	57.2 (2.25)	299.5 (11.63)

DIMENSIONS IN MILLIMETRES (INCHES)

For other dimensions, see "DSLHG-04-$\frac{1}{2}$-∗-N" drawing above.

Plug-in Connector Type

Mounting Surface:
ISO4401-AD-07-4-A

DSLHG-04-4W-∗-∗-N-13/1390

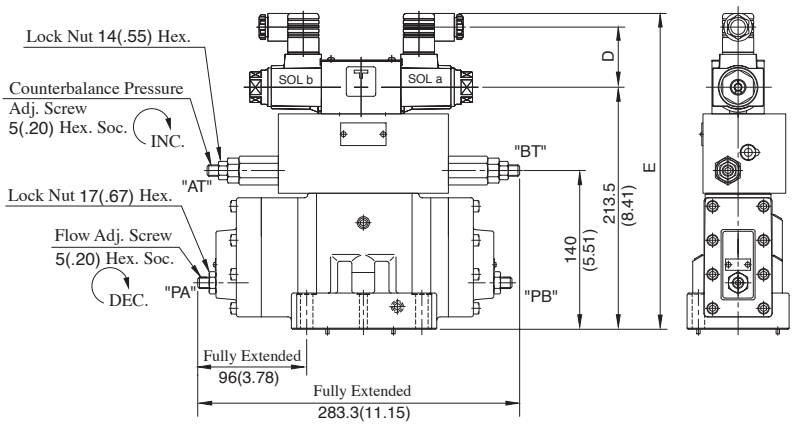

Model Numbers	Dimensions mm (Inches)	
	D	E
DSLHG-04-4W-∗-A∗-N	53 (2.09)	278.5 (10.96)
DSLHG-04-4W-∗-D∗-N	64 (2.52)	289.5 (11.40)
DSLHG-04-4W-∗-R∗-N	57.2 (2.25)	292.5 (11.52)

For other dimensions, see DSLHG-04-$\frac{1}{2}$-∗-N on the previous page.

DSLHG-04-4A-∗-∗-N-13/1390

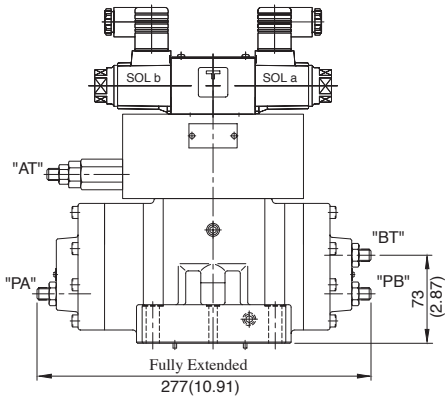

For other dimensions, see "DSLHG-04-4W-∗-∗-N" drawing left.

DSLHG-04-5W-∗-∗-N-13/1390

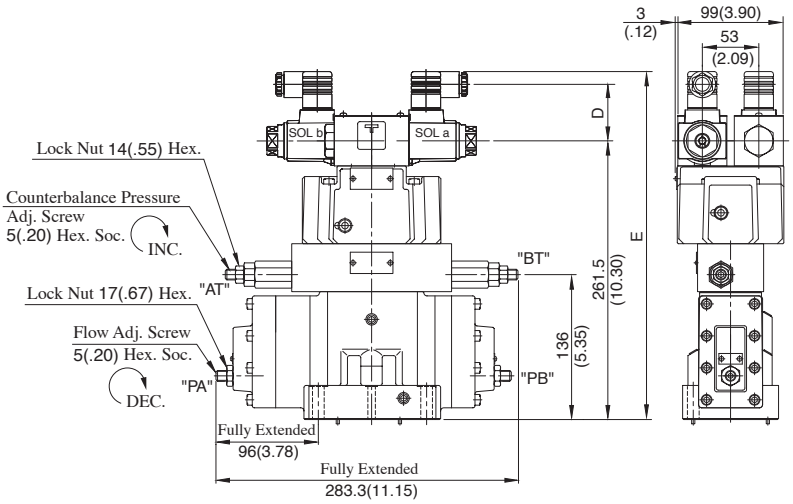

Model Numbers	Dimensions mm (Inches)	
	D	E
DSLHG-04-5W-∗-A∗-N	53 (2.09)	326.5 (12.85)
DSLHG-04-5W-∗-D∗-N	64 (2.52)	337.5 (13.28)
DSLHG-04-5W-∗-R∗-N	57.2 (2.25)	340.5 (13.41)

For other dimensions, see DSLHG-04-$\frac{1}{2}$-∗-N on the previous page.

DSLHG-04-5A-∗-∗-N-13/1390

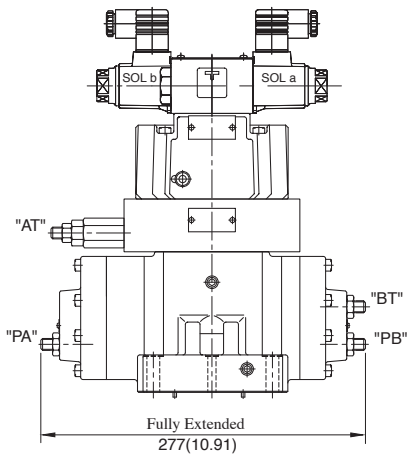

For other dimensions, see "DSLHG-04-5W-∗-∗-N" drawing left.

DIMENSIONS IN MILLIMETRES (INCHES)

Terminal Box Type

Mounting Surface: ISO4401-AE-08-4-A

DSLHG-06-$\frac{1}{2}$-∗-13/1390

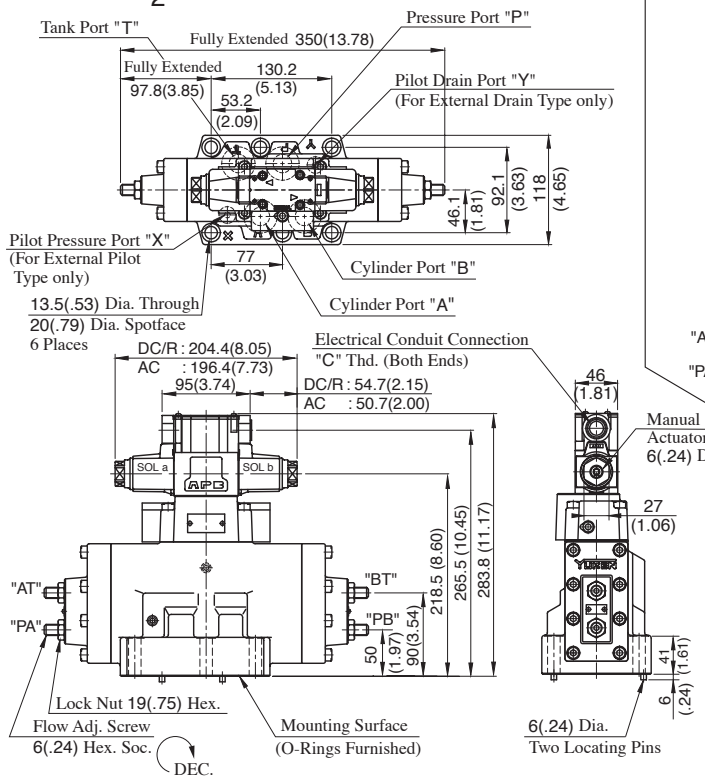

DSLHG-06-3-∗-13/1390

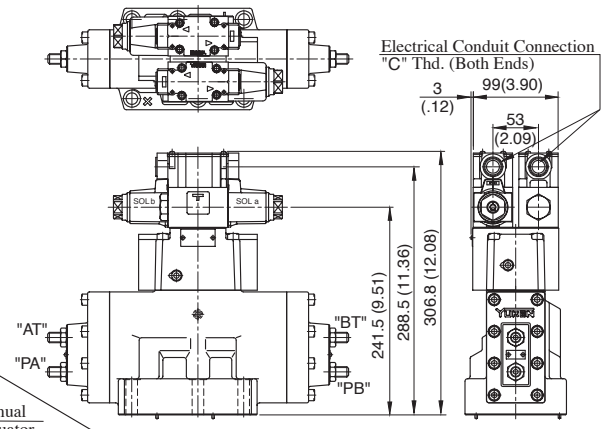

For other dimensions, see "DSLHG-06-$\frac{1}{2}$" drawing left.

Model Numbers	"C" Thd.
DSLHG-06-∗∗-∗-13	G 1/2
DSLHG-06-∗∗-∗-1390	1/2 NPT

DIMENSIONS IN MILLIMETRES (INCHES)

DSLHG-06-4W-∗-13/1390

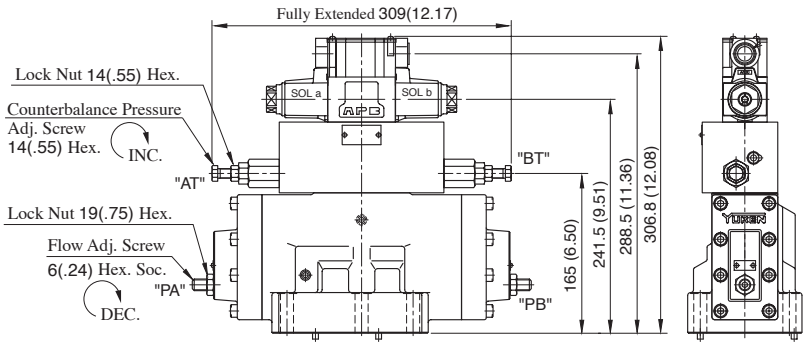

For other dimensions, see "DSLHG-06-$\frac{1}{2}$" drawing above.

DSLHG-06-4A-∗-13/1390

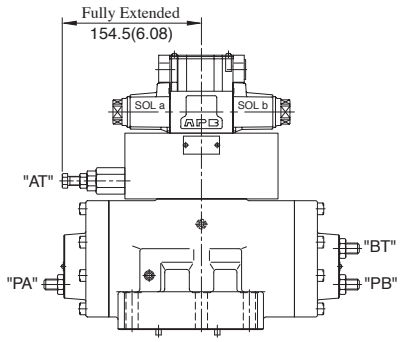

For other dimensions, see "DSLHG-06-4W" drawing left.

DSLHG-06-5W-∗-13/1390

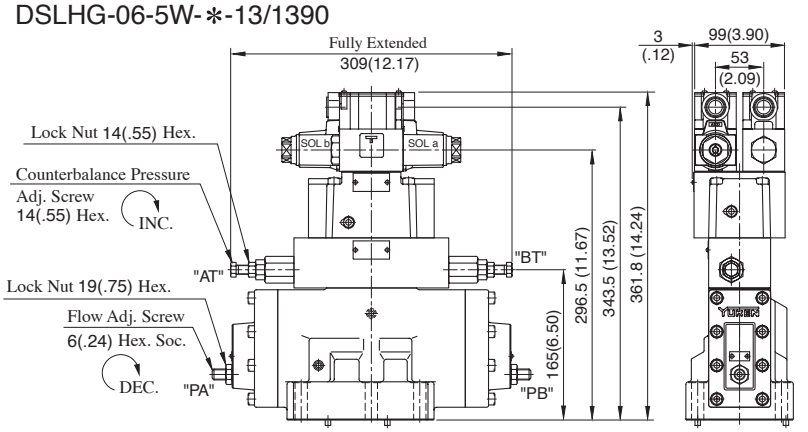

For other dimensions, see "DSLHG-06-$\frac{1}{2}$" drawing above.

DSLHG-06-5A-∗-13/1390

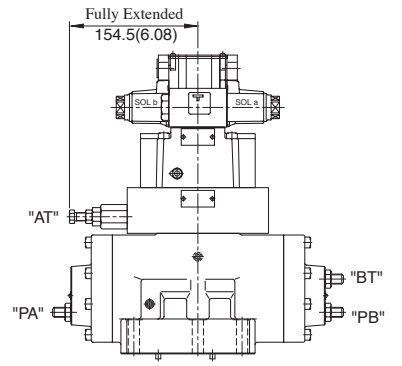

For other dimensions, see "DSLHG-06-5W" drawing left.

DSLHG-06-$\frac{1}{2}$-∗-N-13/1390

Plug-in Connector Type

Mounting Surface:
ISO4401-AE-08-4-A

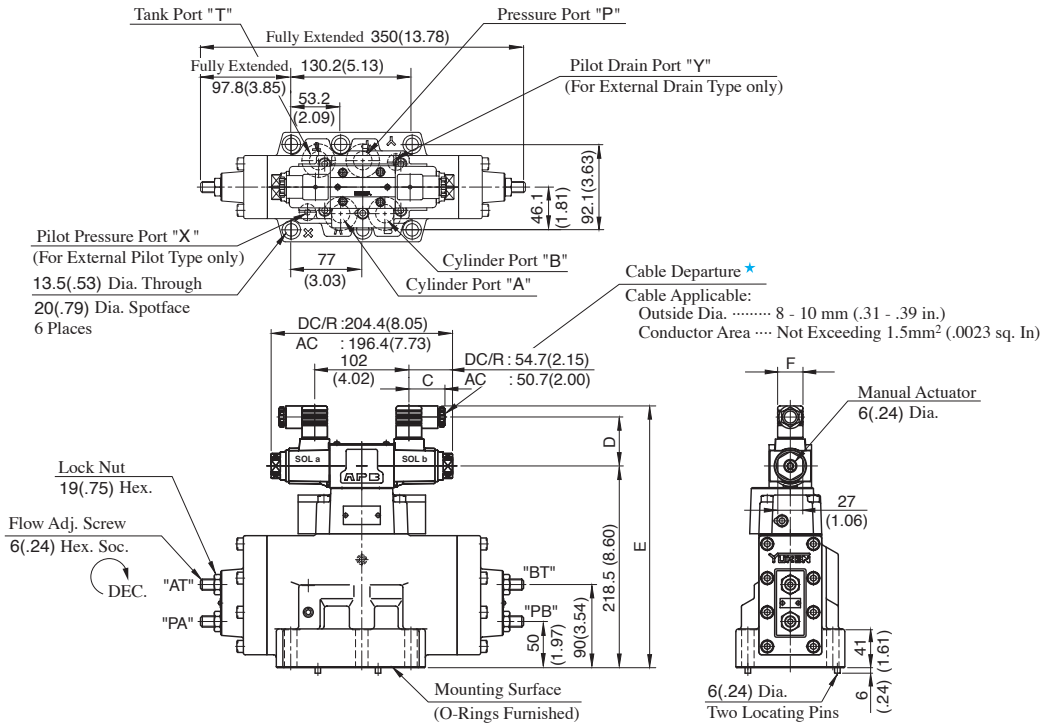

Model Numbers	Dimensions mm (Inches)			
	C	D	E	F
DSLHG-06-∗-A∗-N	39 (1.54)	53 (2.09)	283.5 (11.16)	27.5 (1.08)
DSLHG-06-∗-D∗-N	39 (1.54)	64 (2.52)	294.5 (11.59)	27.5 (1.08)
DSLHG-06-∗-R∗-N	53 (2.09)	57.2 (2.25)	297.5 (11.71)	34 (1.34)

★ Position of cable departure can be changed. For the details, refer to DSLHG-04 valve on page 466.

DSLHG-06-3-∗-N-13/1390

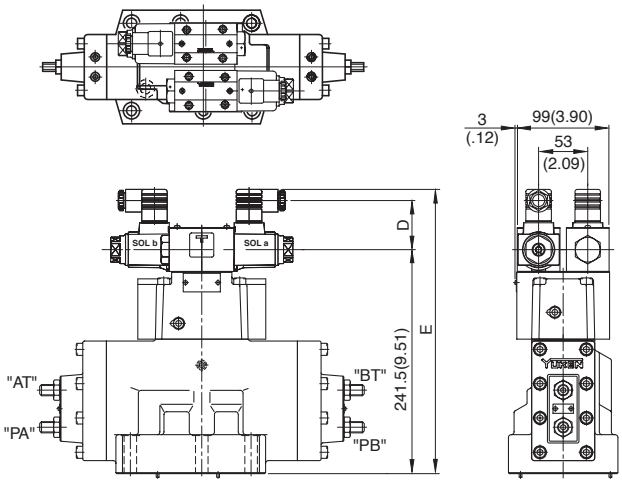

Model Numbers	Dimensions mm (Inches)	
	D	E
DSLHG-06-3-A∗-N	53 (2.09)	306.5 (12.07)
DSLHG-06-3-D∗-N	64 (2.52)	317.5 (12.50)
DSLHG-06-3-R∗-N	57.2 (2.25)	320.5 (12.62)

DIMENSIONS IN MILLIMETRES (INCHES)

For other dimensions, see "DSLHG-06-$\frac{1}{2}$-∗-N" drawing above.

E

Multi Purpose Control Valves

Plug-in Connector Type

Mounting Surface:
ISO4401-AE-08-4-A

DSLHG-06-4W-∗-N-13/1390

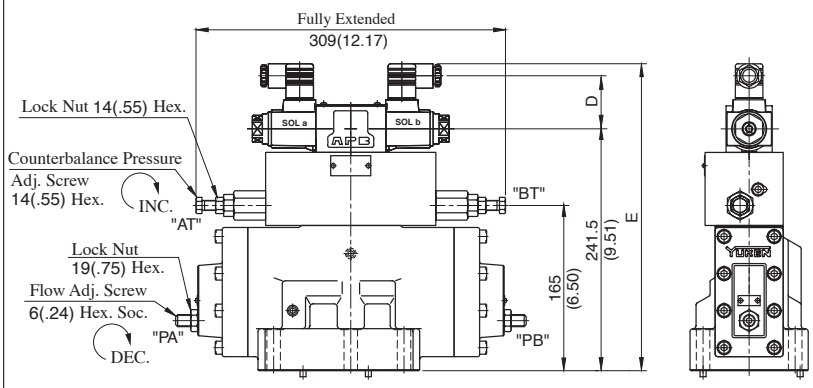

Model Numbers	Dimensions mm (Inches)	
	D	E
DSLHG-06-4W-A∗-N	53 (2.09)	306.5 (12.07)
DSLHG-06-4W-D∗-N	64 (2.52)	317.5 (12.50)
DSLHG-06-4W-R∗-N	57.2 (2.25)	320.5 (12.62)

For other dimensions, see DSLHG-06-$\frac{1}{2}$-∗-N on the previous page.

DSLHG-06-4A-∗-N-13/1390

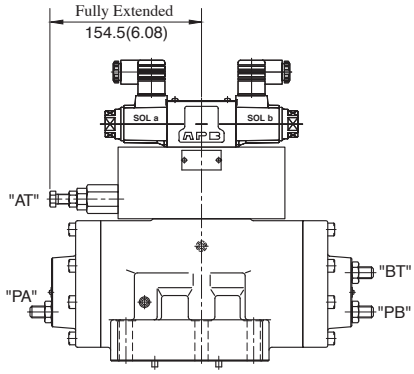

For other dimensions, see "DSLHG-06-4W-∗-N" drawing left.

DSLHG-06-5W-∗-N-13/1390

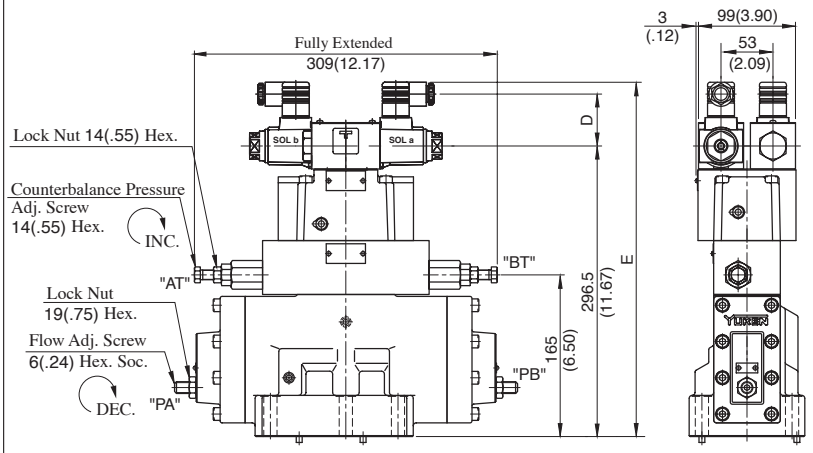

Model Numbers	Dimensions mm (Inches)	
	D	E
DSLHG-06-5W-A∗-N	53 (2.09)	361.5 (14.23)
DSLHG-06-5W-D∗-N	64 (2.52)	372.5 (14.67)
DSLHG-06-5W-R∗-N	57.2 (2.25)	375.5 (14.78)

For other dimensions, see DSLHG-06-$\frac{1}{2}$-∗-N on the previous page.

DSLHG-06-5A-∗-N-13/1390

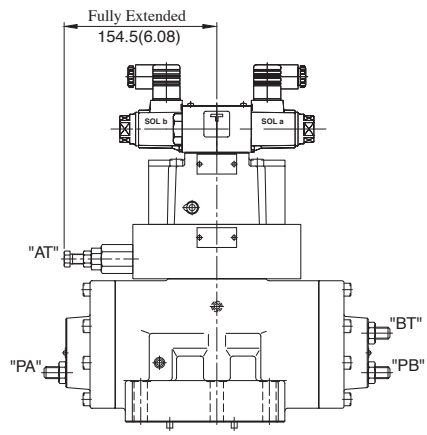

For other dimensions, see "DSLHG-06-5W-∗-N" drawing left.

DIMENSIONS IN MILLIMETRES (INCHES)

Terminal Box Type

Mounting Surface:
ISO 4401-AF-10-4-A

DSLHG-10-$\frac{1}{2}$-∗-13/1390

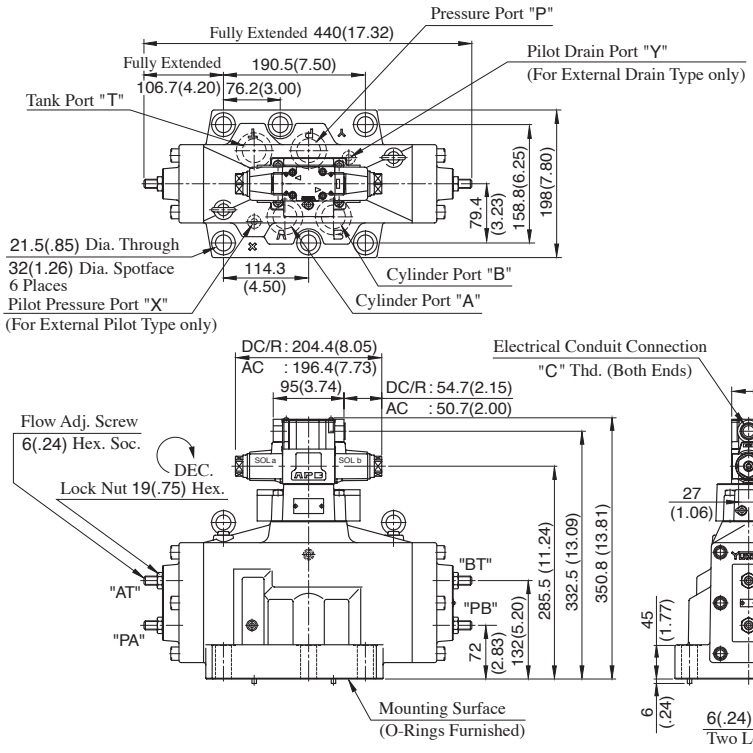

DSLHG-10-3-∗-13/1390

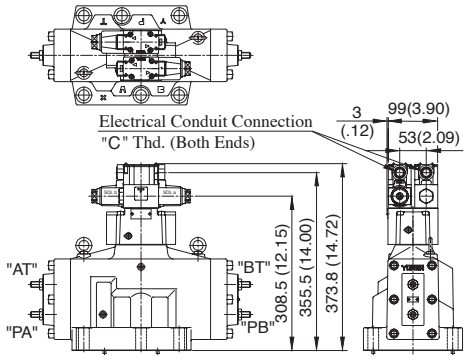

For other dimensions, see "DSLHG-10-$\frac{1}{2}$" drawing left.

Model Numbers	"C" Thd.
DSLHG-10-∗-∗-13	G 1/2
DSLHG-10-∗-∗-1390	1/2 NPT

DIMENSIONS IN MILLIMETRES (INCHES)

DSLHG-10-4W-∗-13/1390

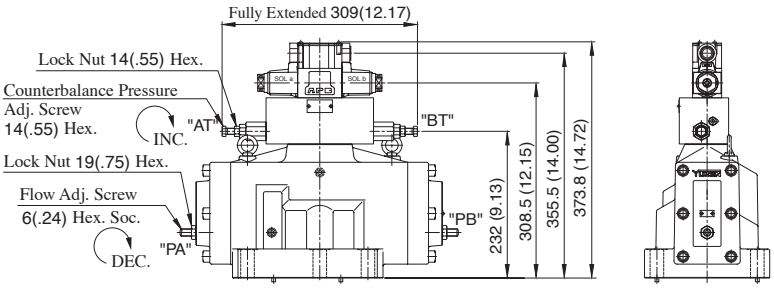

For other dimensions, see "DSLHG-10-$\frac{1}{2}$" drawing above.

DSLHG-10-4A-∗-13/1390

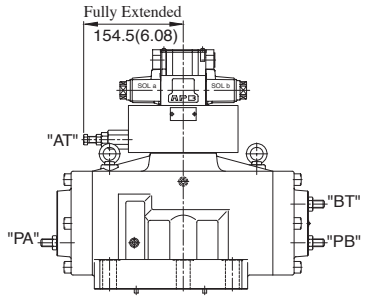

For other dimensions, see "DSLHG-10-4W" drawing left.

DSLHG-10-5W-∗-13/1390

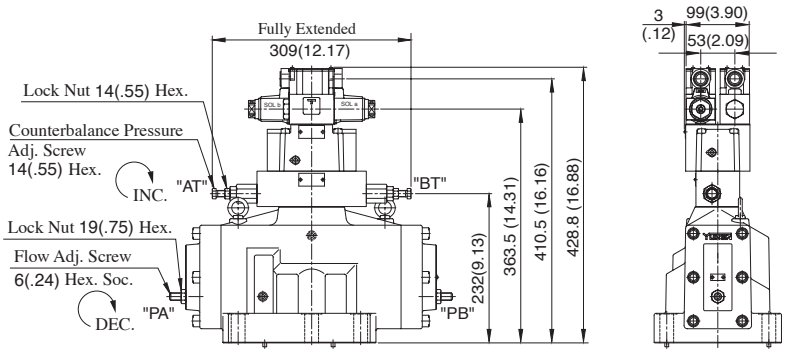

For other dimensions, see "DSLHG-10-$\frac{1}{2}$" drawing above.

DSLHG-10-5A-∗-13/1390

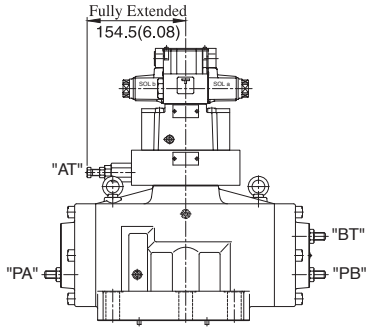

For other dimensions, see "DSLHG-10-5W" drawing left.

E

Multi Purpose Control Valves

Plug-in Connector Type

Mounting Surface:
ISO 4401-AF-10-4-A

DSLHG-10-$\frac{1}{2}$-∗-N-13/1390

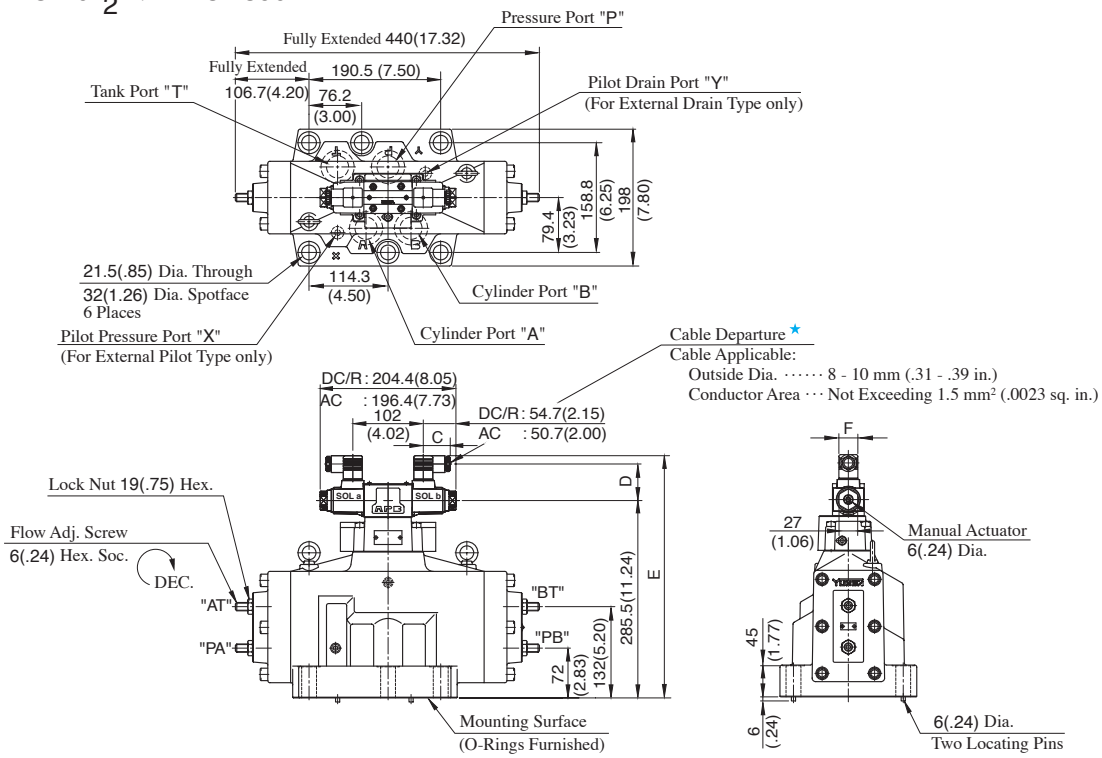

Model Numbers	Dimensions mm (Inches)			
	C	D	E	F
DSLHG-10-∗-A∗-N	39 (1.54)	53 (2.09)	350.5 (13.80)	27.5 (1.08)
DSLHG-10-∗-D∗-N	39 (1.54)	64 (2.52)	361.5 (14.23)	27.5 (1.08)
DSLHG-10-∗-R∗-N	53 (2.09)	57.2 (2.25)	364.5 (14.35)	34 (1.34)

★ Position of cable departure can be changed. For the details, refer to DSLHG-04 valve on page 466.

DSLHG-10-3-∗-N-13/1390

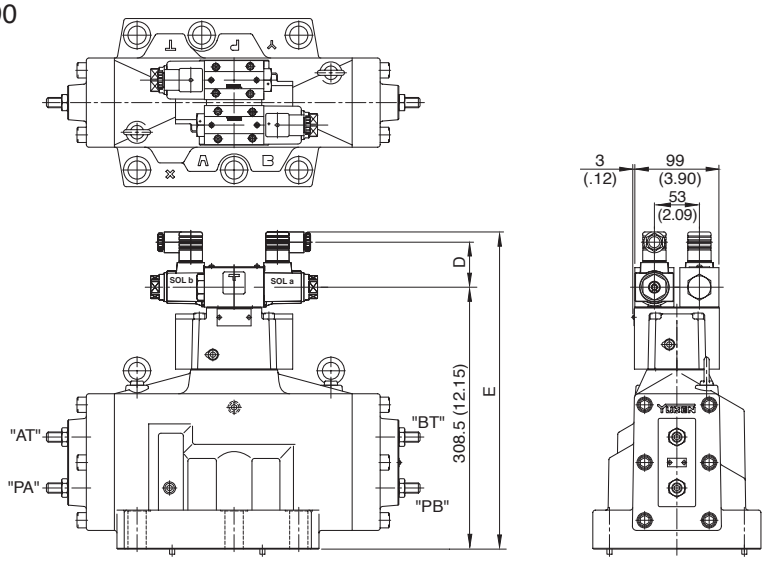

Model Numbers	Dimensions mm (Inches)	
	D	E
DSLHG-10-3-A∗-N	53 (2.09)	373.5 (14.70)
DSLHG-10-3-D∗-N	64 (2.52)	384.5 (15.14)
DSLHG-10-3-R∗-N	57.2 (2.25)	387.5 (15.26)

DIMENSIONS IN MILLIMETRES (INCHES)

For other dimensions, see "DSLHG-10-$\frac{1}{2}$-∗-N" drawing above.

Plug-in Connector Type

Mounting Surface:
ISO 4401-AF-10-4-A

DSLHG-10-4W-∗-N-13/1390

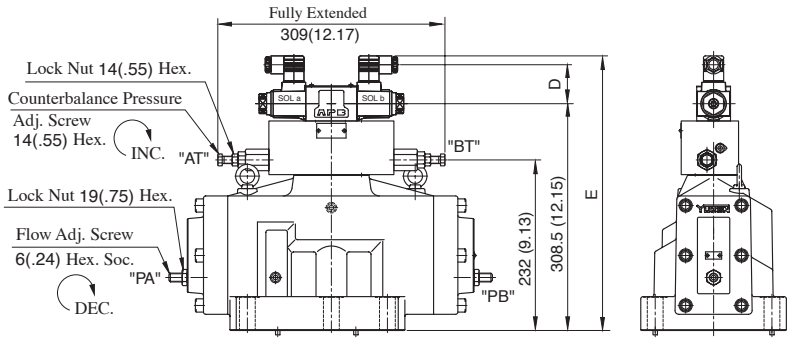

Model Numbers	Dimensions mm (Inches)	
	D	E
DSLHG-10-4W-A∗-N	53 (2.09)	373.5 (14.70)
DSLHG-10-4W-D∗-N	64 (2.52)	384.5 (15.14)
DSLHG-10-4W-R∗-N	57.2 (2.25)	387.5 (15.26)

For other dimensions, see DSLHG-10-$\frac{1}{2}$-∗-N on the previous page.

DSLHG-10-4A-∗-N-13/1390

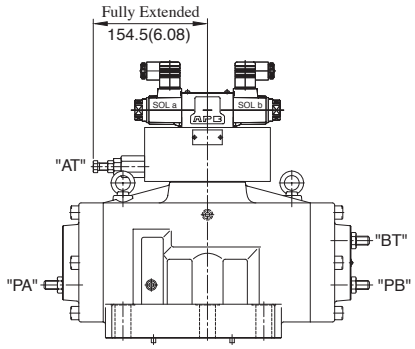

For other dimensions, see "DSLHG-10-4W-∗-N" drawing left.

DSLHG-10-5W-∗-N-13/1390

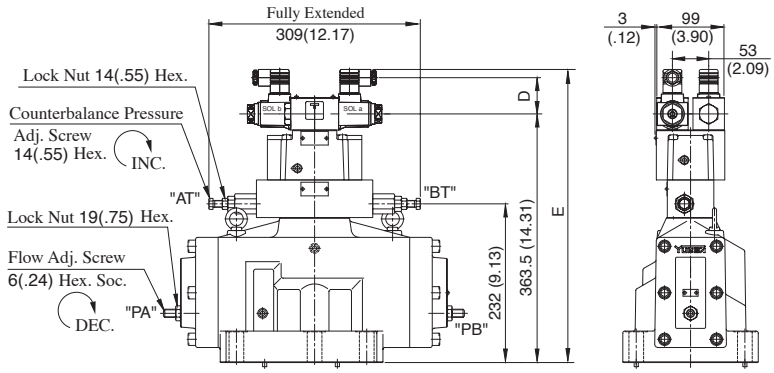

Model Numbers	Dimensions mm (Inches)	
	D	E
DSLHG-10-5W-A∗-N	53 (2.09)	428.5 (16.87)
DSLHG-10-5W-D∗-N	64 (2.52)	439.5 (17.30)
DSLHG-10-5W-R∗-N	57.2 (2.25)	442.5 (17.42)

For other dimensions, see DSLHG-10-$\frac{1}{2}$-∗-N on the previous page.

DSLHG-10-5A-∗-N-13/1390

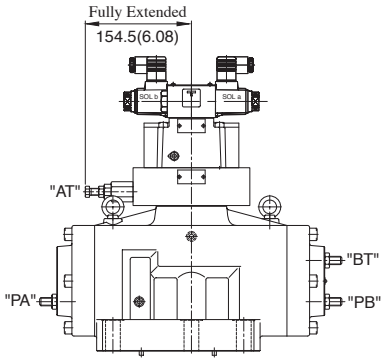

For other dimensions, see "DSLHG-10-5W-∗-N" drawing left.

DIMENSIONS IN MILLIMETRES (INCHES)

List of Seals for Main Valve, Pilot Selector Valve and Orifice

DSLHG-04/06/10-$\frac{1}{2}$-∗-13/1390

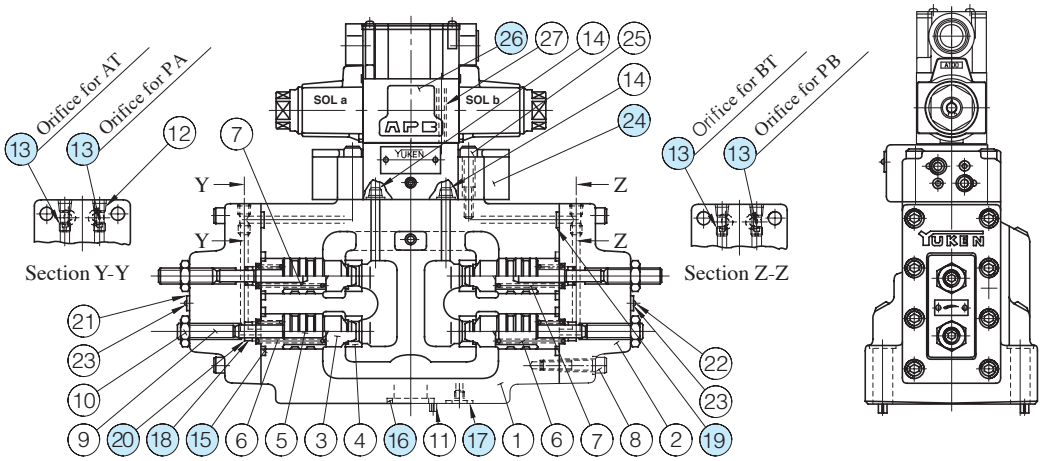

DSLHG-04/06/10-3-∗-13/1390

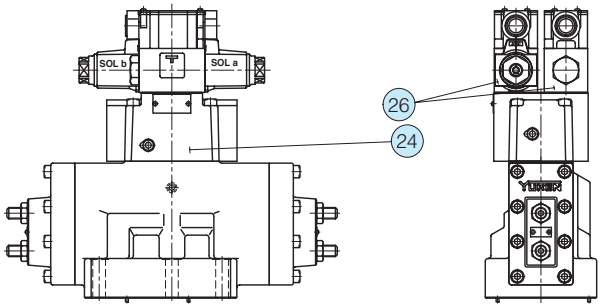

Note) Main valve is same as above drawings.

List of Seals for Main Valves

Item	Name of Parts	Part Numbers			Qty.
		DSLHG-04	DSLHG-06	DSLHG-10	
15	O-Ring	SO-NB-P22	SO-NB-G30	SO-NB-G40	4
16	O-Ring	SO-NB-P22	SO-NB-P30	SO-NB-P42	4
17	O-Ring	SO-NB-P9	SO-NB-P14	SO-NB-P14	2
18	O-Ring	SO-NA-P8	SO-NA-P10	SO-NA-P16	4
19	O-Ring	SO-NB-P8	SO-NB-P9	SO-NB-P11	4
20	Back Up Ring	SO-BB-P8	SO-BB-P10	SO-BB-P16	4

Note: When ordering the seals, please specify the seal kit number listed on page 478.

Item ⑬ Orifice

The timing of flow path opening/closing can be adjusted as required by selecting the appropriate pilot orifice diameter. When the diameter of the orifice is to be changed, another orifice should be ordered. Standard built-in orifice diameters and selectable orifice diameters are listed in the table below.

Orifice Type	TP-OPT-1/16 x d		
Model Numbers	Orifice Diameter "d" mm		
	Standard Built-in	Selectable	Max. Dia. at Pressure over 20 MPa(2900 PSI)
DSLHG-04	1.0	0.5, 0.6, 0.8, 1.0 1.2, 1.4, 1.6, 1.8 2.0, 2.5	1.2
DSLHG-06	1.2		
DSLHG-10	1.4		1.4

Item ㉔ Pilot Selector Valve List

Multi-Purpose Control Valve Model Numbers	㉔ Pilot Selector Valve Model Numbers
DSLHG-04-1	CG-04-1-10
DSLHG-04-2	CG-04-2-10
DSLHG-04-3	CG-04-3-10
DSLHG-06-1	CG-06-1-10
DSLHG-06-2	CG-06-2-10
DSLHG-06-3	CG-06-3-10
DSLHG-10-1	CG-06-1-10
DSLHG-10-2	CG-06-2-10
DSLHG-10-3	CG-06-3-10

Note: For details of Pilot Selector Valve, see page 476.

Pilot Valve

Refer to page 478 for Pilot Valve Model Numbers.

List of Seals for Main Valves and Pilot Selector Valve

DSLHG-04/06/10-4W-∗-12/1290

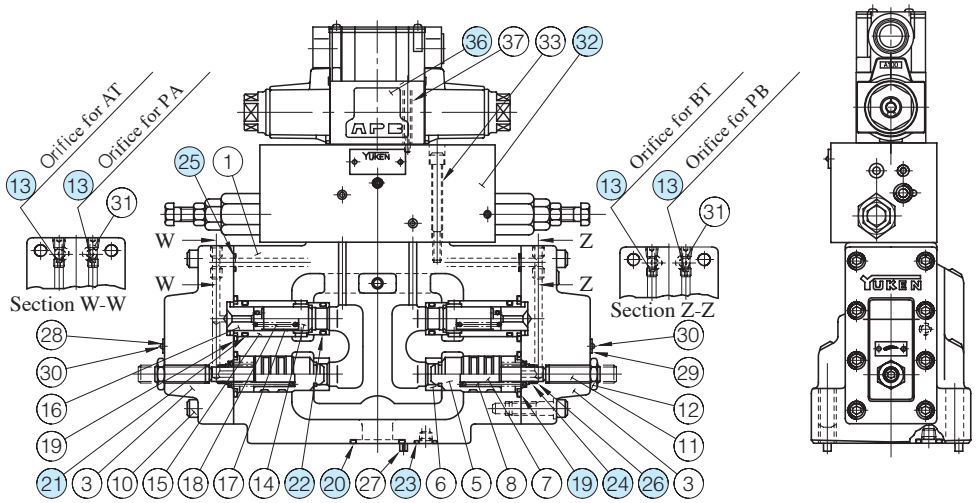

DSLHG-04/06/10-4A/5A-∗-12/1290

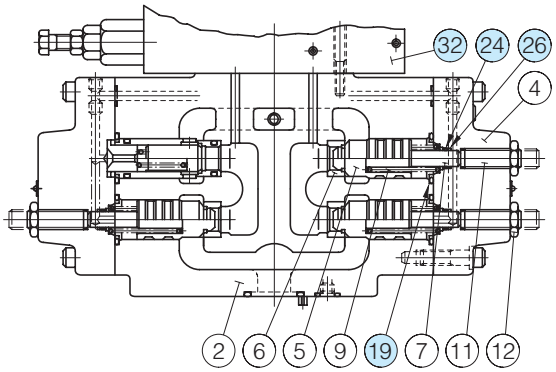

DSLHG-04/06/10-5W-∗-12/1290

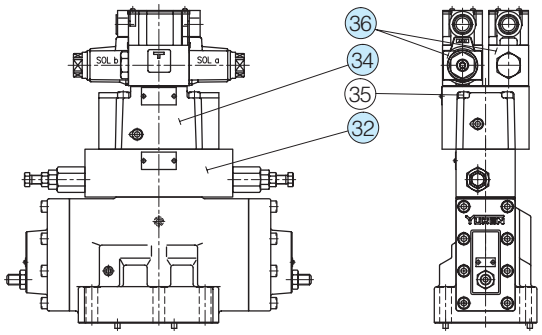

Note) Main valve is the same as above drawings.

List of Seals for Main Valves

Item	Name of Parts	Part Numbers			Qty.
		DSLHG-04	DSLHG-06	DSLHG-10	
19	O-Ring	SO-NB-P22	SO-NB-G30	SO-NB-G40	4
20	O-Ring	SO-NB-P22	SO-NB-P30	SO-NB-P42	4
21	O-Ring	SO-NB-P16	SO-NB-P22	SO-NB-P30	2(1)
22	O-Ring	SO-NB-P14	SO-NB-P20	SO-NB-A122	2(1)
23	O-Ring	SO-NB-P9	SO-NB-P14	SO-NB-P14	2
24	O-Ring	SO-NA-P8	SO-NA-P10	SO-NA-P16	2(3)
25	O-Ring	SO-NB-P8	SO-NB-P9	SO-NB-P11	4
26	Back Up Ring	SO-BB-P8	SO-BB-P10	SO-BB-P16	2(3)

Note 1: The figures in ( ) indicate the quantity of seals used for 4A and 5A.
Note 2: When ordering the seals, please specify the seal kit number listed on page 478.

Pilot Valve

Refer to page 478 for Pilot Valve Model Numbers.

Pilot Selector Valve List

Multi-Purpose Control Valve Model Numbers	Pilot Selector Valve Model Numbers	
	Item ㉜	Item ㉞
DSLHG-04-4A-■	CG-04-4A-■-10	—
DSLHG-04-4W-■	CG-04-4W-■-10	—
DSLHG-04-5A-■	CG-04-5A-■-10	CG-04-3-10
DSLHG-04-5W-■	CG-04-5W-■-10	
DSLHG-06-4A	CG-06-4A-10	—
DSLHG-06-4W	CG-06-4W-10	—
DSLHG-06-5A	CG-06-5A-10	CG-06-3-10
DSLHG-06-5W	CG-06-5W-10	
DSLHG-10-4A	CG-06-4A-10	—
DSLHG-10-4W	CG-06-4W-10	—
DSLHG-10-5A	CG-06-5A-10	CG-06-3-10
DSLHG-10-5W	CG-06-5W-10	

Note: Fill "B" or "H" representing the pressure adjustment range in section marked with ■.
See page 477 for the details of the pilot selector valves.

See the previous page for Item ⑬ Orifice.

List of Seals (Pilot Selector Valves)

CG-04/06-1-10

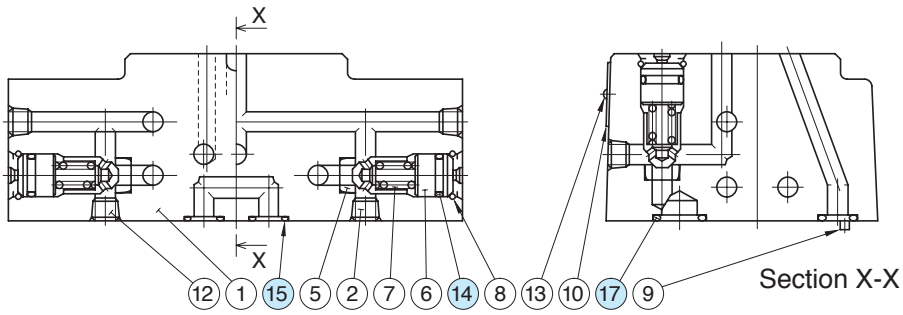

CG-04/06-2-10

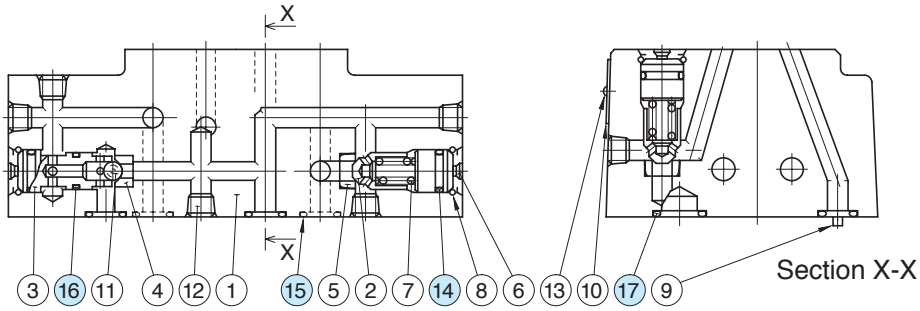

CG-04/06-3-10

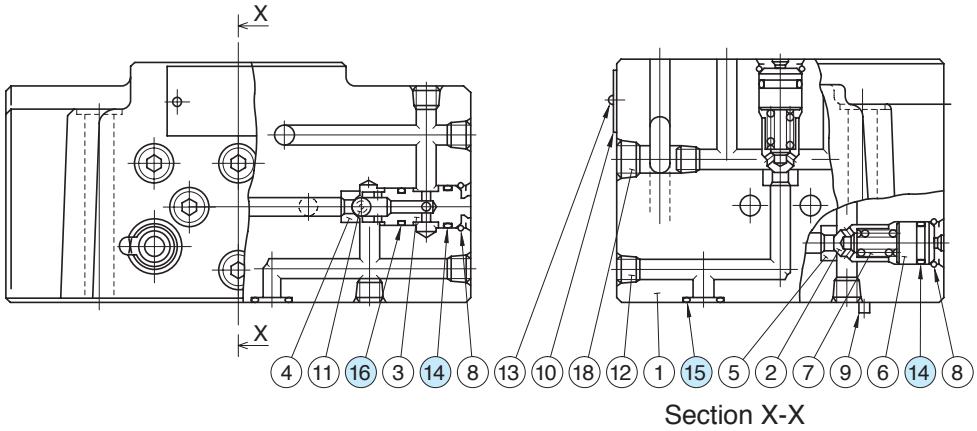

List of Seals

Item	Name of Parts	CG-04				CG-06			
		Part Numbers	Quantity			Part Nmbers	Quantity		
			CG-04-1	CG-04-2	CG-04-3		CG-06-1	CG-06-2	CG-06-3
14	O-Ring	SO-NB-P10	3	5	5	SO-NB-P10	3	5	5
15	O-Ring	SO-NB-P8	7	7	8	SO-NB-P9	7	7	8
16	O-Ring	SO-NB-P8	—	2	2	SO-NB-P8	—	2	2
17	O-Ring	SO-NB-P8	1	1	—	SO-NB-A014	1	1	—

Note: When ordering the o-rings, please specify the seal kit number listed in page 478.

List of Seals (Pilot Selector Valves)

CG-04/06-4W-10

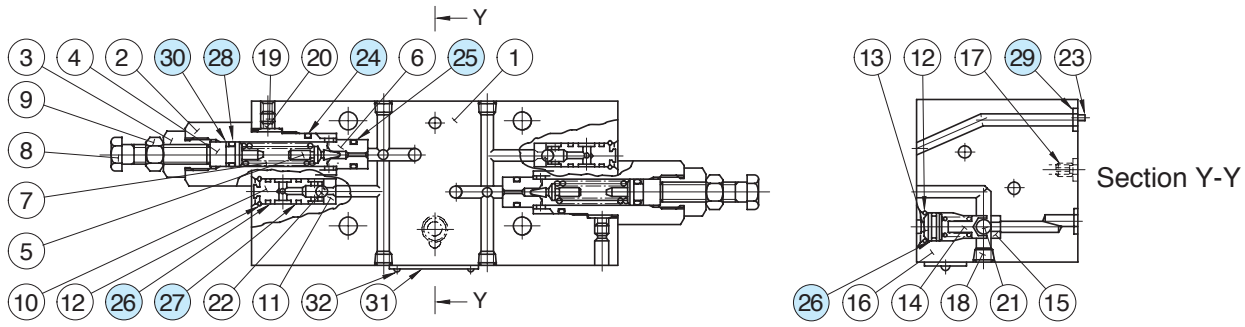

CG-04/06-4A-10

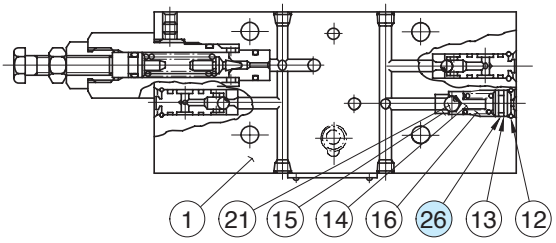

CG-04/06-5A-10

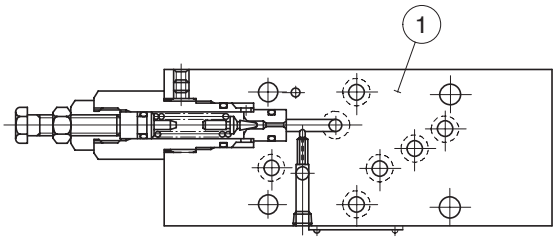

CG-04/06-5W-10

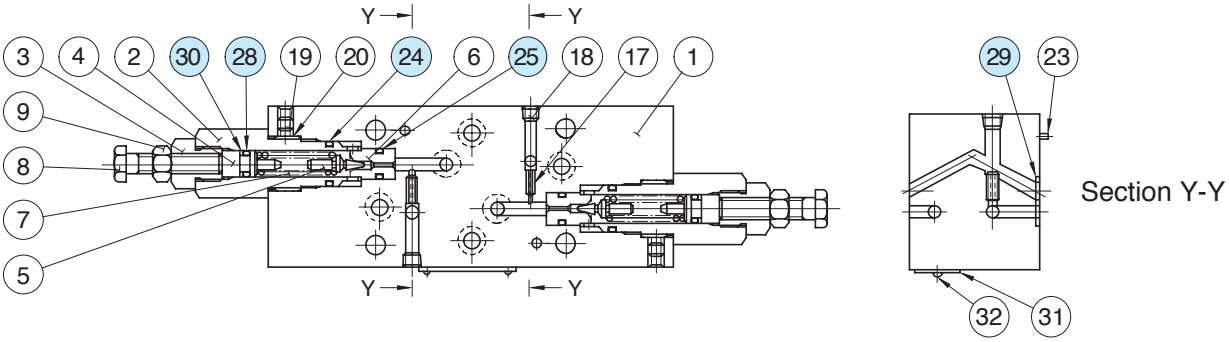

List of Seals

Item	Name of Parts	CG-04					CG-06				
		Part Numbers	Quantity				Part Nmbers	Quantity			
			-4W-	-4A-	-5W-	-5A-		-4W-	-4A-	-5W-	-5A-
24	O-Ring	SO-NB-P12	2	1	2	1	SO-NB-P16	2	1	2	1
25	O-Ring	SO-NB-P9	2	1	2	1	SO-NB-P11	2	1	2	1
26	O-Ring	SO-NB-P10	3	4	—	—	SO-NB-P10	3	4	—	—
27	O-Ring	SO-NB-P8	2	2	—	—	SO-NB-P8	2	2	—	—
28	O-Ring	SO-NA-P6	2	1	2	1	SO-NA-P9	2	1	2	1
29	O-Ring	SO-NB-P8	8	8	8	8	SO-NB-P9	8	8	8	8
30	Back Up Ring	SO-BB-P6	2	1	2	1	SO-BB-P9	2	1	2	1

Note: When ordering the seals, please specify the seal kit number listed in page 478.

List of Seal Kits and Pilot Valves

Model Numbers	Pilot Valve Model Numbers	Seal Kit Numbers		
		Complete Kit	For Pilot Selector Valves	For Pilot Valves
DSLHG-04-1-★-▲-13 DSLHG-04-1-★-▲-1390	DSG-01-3C9-★-▲-70 DSG-01-3C9-★-▲-7090	KS-DSLHG-04-1-▲-13	KS-CG-04-1-10	KS-DSG-01-▲-70 (1 Set Req'd)
DSLHG-04-2-★-▲-13 DSLHG-04-2-★-▲-1390	DSG-01-3C9-★-▲-70 DSG-01-3C9-★-▲-7090	KS-DSLHG-04-2-▲-13	KS-CG-04-2-10	
DSLHG-04-3-★-▲-13 DSLHG-04-3-★-▲-1390	DSG-01-2B2-★-▲-70 DSG-01-2B2-★-▲-7090	KS-DSLHG-04-3-▲-13		KS-DSG-01-▲-70 (2 Set Req'd)
DSLHG-04-4A-⁎-★-▲-13 DSLHG-04-4A-⁎-★-▲-1390	DSG-01-3C9-★-▲-70 DSG-01-3C9-★-▲-7090	KS-DSLHG-04-4A-▲-13	KS-CG-04-4A-10	KS-DSG-01-▲-70 (1 Set Req'd)
DSLHG-04-4W-⁎-★-▲-13 DSLHG-04-4W-⁎-★-▲-1390	DSG-01-3C9-★-▲-70 DSG-01-3C9-★-▲-7090	KS-DSLHG-04-4W-▲-13	KS-CG-04-4W-10	
DSLHG-04-5A-⁎-★-▲-13 DSLHG-04-5A-⁎-★-▲-1390	DSG-01-2B2-★-▲-70 DSG-01-2B2-★-▲-7090	KS-DSLHG-04-5A-▲-13	KS-CG-04-5A-10	KS-DSG-01-▲-70 (2 Set Req'd)
DSLHG-04-5W-⁎-★-▲-13 DSLHG-04-5W-⁎-★-▲-1390	DSG-01-2B2-★-▲-70 DSG-01-2B2-★-▲-7090	KS-DSLHG-04-5W-▲-13	KS-CG-04-5W-10	
DSLHG-06-1-★-▲-13 DSLHG-06-1-★-▲-1390	DSG-01-3C9-★-▲-70 DSG-01-3C9-★-▲-7090	KS-DSLHG-06-1-▲-13	KS-CG-06-1-10	KS-DSG-01-▲-70 (1 Set Req'd)
DSLHG-06-2-★-▲-13 DSLHG-06-2-★-▲-1390	DSG-01-3C9-★-▲-70 DSG-01-3C9-★-▲-7090	KS-DSLHG-06-2-▲-13	KS-CG-06-2-10	
DSLHG-06-3-★-▲-13 DSLHG-06-3-★-▲-1390	DSG-01-2B2-★-▲-70 DSG-01-2B2-★-▲-7090	KS-DSLHG-06-3-▲-13	KS-CG-06-3-10	KS-DSG-01-▲-70 (2 Set Req'd)
DSLHG-06-4A-★-▲-13 DSLHG-06-4A-★-▲-1390	DSG-01-3C9-★-▲-70 DSG-01-3C9-★-▲-7090	KS-DSLHG-06-4A-▲-13	KS-CG-06-4A-10	KS-DSG-01-▲-70 (1 Set Req'd)
DSLHG-06-4W-★-▲-13 DSLHG-06-4W-★-▲-1390	DSG-01-3C9-★-▲-70 DSG-01-3C9-★-▲-7090	KS-DSLHG-06-4W-▲-13	KS-CG-06-4W-10	
DSLHG-06-5A-★-▲-13 DSLHG-06-5A-★-▲-1390	DSG-01-2B2-★-▲-70 DSG-01-2B2-★-▲-7090	KS-DSLHG-06-5A-▲-13	KS-CG-06-5A-10	KS-DSG-01-▲-70 (2 Set Req'd)
DSLHG-06-5W-★-▲-13 DSLHG-06-5W-★-▲-1390	DSG-01-2B2-★-▲-70 DSG-01-2B2-★-▲-7090	KS-DSLHG-06-5W-▲-13	KS-CG-06-5W-10	
DSLHG-10-1-★-▲-13 DSLHG-10-1-★-▲-1390	DSG-01-3C9-★-▲-70 DSG-01-3C9-★-▲-7090	KS-DSLHG-10-1-▲-13	KS-CG-06-1-10	KS-DSG-01-▲-70 (1 Set Req'd)
DSLHG-10-2-★-▲-13 DSLHG-10-2-★-▲-1390	DSG-01-3C9-★-▲-70 DSG-01-3C9-★-▲-7090	KS-DSLHG-10-2-▲-13	KS-CG-06-2-10	
DSLHG-10-3-★-▲-13 DSLHG-10-3-★-▲-1390	DSG-01-2B2-★-▲-70 DSG-01-2B2-★-▲-7090	KS-DSLHG-10-3-▲-13	KS-CG-06-3-10	KS-DSG-01-▲-70 (2 Set Req'd)
DSLHG-10-4A-★-▲-13 DSLHG-10-4A-★-▲-1390	DSG-01-3C9-★-▲-70 DSG-01-3C9-★-▲-7090	KS-DSLHG-10-4A-▲-13	KS-CG-06-4A-10	KS-DSG-01-▲-70 (1 Set Req'd)
DSLHG-10-4W-★-▲-13 DSLHG-10-4W-★-▲-1390	DSG-01-3C9-★-▲-70 DSG-01-3C9-★-▲-7090	KS-DSLHG-10-4W-▲-13	KS-CG-06-4W-10	
DSLHG-10-5A-★-▲-13 DSLHG-10-5A-★-▲-1390	DSG-01-2B2-★-▲-70 DSG-01-2B2-★-▲-7090	KS-DSLHG-10-5A-▲-13	KS-CG-06-5A-10	KS-DSG-01-▲-70 (2 Set Req'd)
DSLHG-10-5W-★-▲-13 DSLHG-10-5W-★-▲-1390	DSG-01-2B2-★-▲-70 DSG-01-2B2-★-▲-7090	KS-DSLHG-10-5W-▲-13	KS-CG-06-5W-10	

Note 1: Fill coil type (a symbol representing current/voltage) in section marked ★. Likewise, in section marked ▲, fill a symbol representing the type of electrical conduit connection (None: Terminal Box Type, N: Plug-in Connector Type).
2: A complete seal kit is composed of seal kit for pilot selector valve, seal kit for pilot valve and seal for main valve.
See pages 474 and 475 for information on the seals for main valve.
3: See page 344 for the detailed information on the pilot valves.

How to Change Pilot & Drain Connection

Pilot Connection and Drain Connection can be changed easily with a disconnection/connection of pilot plug. The following drawings give illustrations of External Pilot-External Drain Type, When changing to Internal Pilot-Internal Drain Type, the following procedure may be followed.

● External Pilot → Internal Pilot (See Section E-E)

1) Remove pipe plug ①.
2) Remove pipe plug ②.
3) Wind a sealing tape around the pipe plug ①, then fit the plug into the port.

● External Drain → Internal Drain (See Section D-D)

1) Remove pipe plug ③.
2) Remove pipe plug ④.
3) Wind a sealing tape around the pipe plug ③, then fit the plug into the port.
4) In case of DSLHG-04, fit the plug into the port "Y" on the sub-plate. In case of DSLHG-06/10, wind a sealing tape around the plug ④ and then thread it into the port "Y".

DSLHG-04

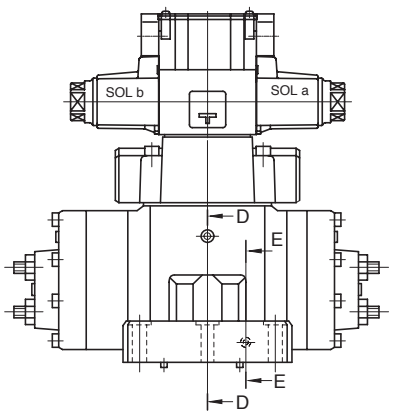

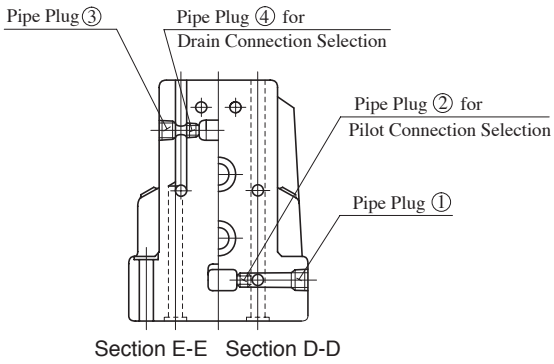

DSLHG-06/10

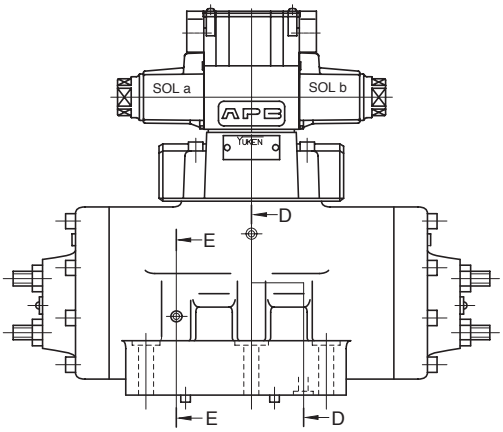

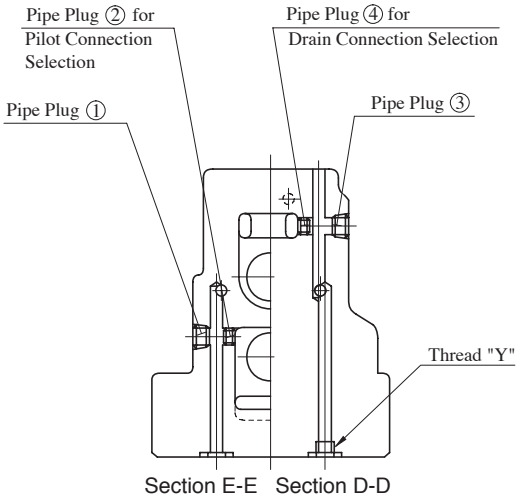

Solenoid Operated Poppet Type Two-Way Valves

These valves are used for opening/closing the oil path by having the poppet valve operated with an electric signal via solenoid. Because these are of poppet type, the internal leakage is quite small and there is no worry about hydraulic lock.

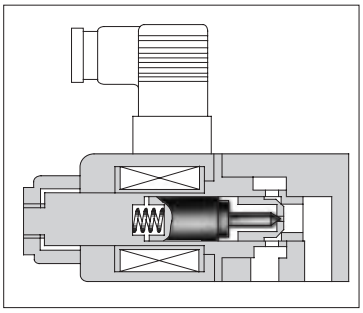

Specifications

Model Numbers	Max. Flow★1 L/min (U.S.GPM)	Max. Operating Pressure MPa (PSI)	Internal leakage cm^3/min (cu.in./min)	Max. Changeover Frequency min^{-1} (Cycles/Min)	Approx. Mass kg(1bs.)
CDSC-01-C-D24-10∗	15 (4.0)	21 (3050)★2	or less 0.25 (.015)	240	0.35 (.8)
CDSC-03-C-∗-21∗	50 (13.2)	14 (2030)	or less 0.25 (.015)	AC: 300 DC: 240 R: 120	0.5 (1.1)
CDST-$^{03W}_{03}$-C-∗-21∗					0.85 (1.9)
CDSG-03-C-∗-21∗					0.85 (1.9)

★ 1. The maximum flow means the limited flow without inducing any abnormality to the operation (changeover) of the valve.
★ 2. When the valve is operated at 18.5 Mpa (2680 PSI) or higher pressure, continuous energies time is restricted with Max. 30 min., and also the energies ratio less than 90 %.

Solenoid Ratings

Electric Source	Coil Type	Frequency (Hz)	Voltage (V)		Current & Power at Rated Voltage		
			Source Rating	Serviceable Range	Inrush (A)	Holding (A)	Power (W)
AC	A100	50	100	80 - 100	1.12	0.55	—
		60	100	90 - 120	0.95	0.40	
			110		0.86	0.36	
	A120	50	120	96 - 132	0.93	0.46	
		60		108 - 144	0.79	0.33	
	A200	50	200	160 - 220	0.56	0.28	
		60	200	180 - 240	0.48	0.20	
			220		0.43	0.18	
	A240	50	240	192 - 264	0.47	0.23	
		60		216 - 288	0.40	0.17	
DC (K Series)	D12	—	12	10.8 - 13.2	—	2.20	26
	D24 ★		24	21.6 - 26.4		1.10	
	D48		48	43.2 - 52.8		0.55	
AC→DC Rectified	R100	50/60	100	90 - 110	—	0.30	26
	R200		200	180 - 220		0.15	

★ CDSC-01 is available with coil type "D24" only.
- Because both AC and DC solenoids employ the plug-in type electrical wiring, the valve can be removed without removing the wiring. (Coil type of CDSC-01 is flying lead wire only.)
- Being 50-60 Hz common service AC solenoids, do not require rewiring when the applied frequency is changed.
- K-Series DC Solenoid which has a reputation for excellent DC control is employed. (Coil type of CDSC-01 is with Surge Suppressor.)

Graphic Symbol

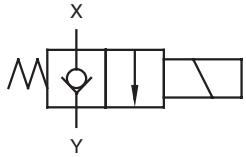

Instructions

- **Direction of flow when the solenoid is energised**
  These valves do not allow flow from Y to X when the solenoid is energised.
- **At the time of test run**
  At the time of test run, there is a possibility that the oil may not flow even after the solenoid is energised because of the residual air in the valve.
- **Mounting**
  There are no mounting restrictions for any models.

Model Number Designation

F-	CDS	T	-03	-C	-D12	-21	∗
Special Seals	Series Number	Type of Connection	Valve Size	Valve Type	Coil Type	Design Number	Design Standard
F: Special seals for phosphate ester type fluids (Omit if not required)	CDS: Solenoid Operated Poppet Type Two-Way Valves	C: Cartridge Type	01	C: Normally Closed	DC D24	10	None: Japanese Std. "JIS" & European Design Std. 90: N. American Design Std.
			03		AC A100, A120 A200, A240 DC D12, D24, D100 AC→DC Rectified R100, R200	21	
		T: Threaded Connection	03W (Piping Size 1/4) 03 (Piping Size 3/8)			21	None: Japanese Std. "JIS" 80: European Design Std. 90: N. American Design Std.
		G: Gasket Mounting	03			21	None: Japanese Std. "JIS" & European Design Std. 90: N. American Design Std.

Mounting Bolts

Mounting bolt in the table below is attached only for Gasket mounting type valve (CDSG-03).

Valve Model Numbers	Socket Head Cap Screws (2pcs.)	
	Japanese Standard "JIS European Design Standard	N. American Design Standard
CDSG-03	M6 × 60 Lg.	1/4-20 UNC × 2-1/4Lg.

Pressure Drop

CDSC-01

Hydraulic Fluid: Viscosity 30 mm² (141 SSU), Specific Gravity 0.850

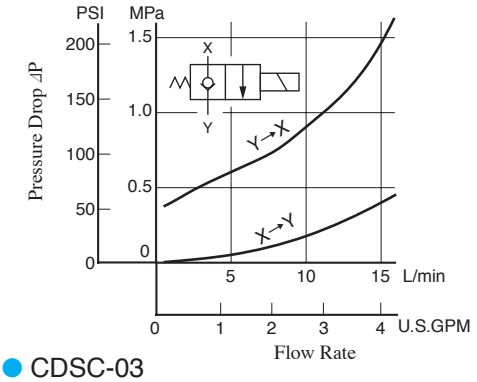

- For any other viscosity, multiply the factors in the table below.

Viscosity	mm²/s	15	20	30	40	50	60	70	80	90	100
	SSU	77	98	141	186	232	278	324	371	417	464
Factor		0.84	0.91	1.00	1.07	1.14	1.19	1.24	1.28	1.32	1.35

- For any other specific gravity (G'), the pressure drop (⊿P') may be obtained from the formula below.

⊿P' = ⊿P (G'/0.850)

CDSC-03
CDST-03
CDSG-03

Hydraulic Fluid: Viscosity 35 mm² (164 SSU), Specific Gravity 0.850

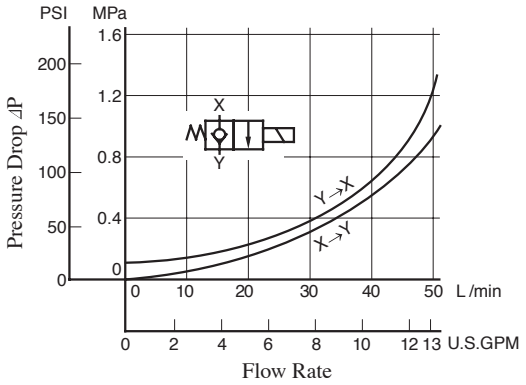

CDST-03W

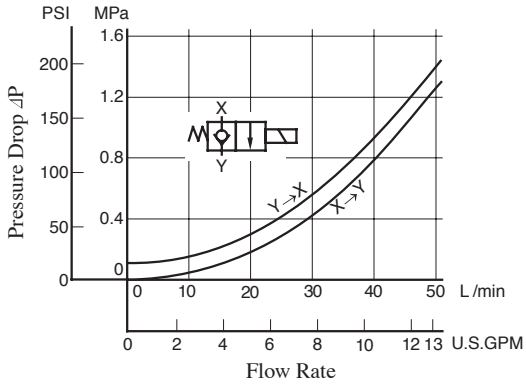

Note: Measuring has been made for the CDSC-03 (Cartridge type) when it is equipped with the same body as the threaded connections and the gasket mounting type.

- For any other viscosity, multiply the factors in the table below.

Viscosity	mm²/s	15	20	30	40	50	60	70	80	90	100
	SSU	77	98	141	186	232	278	324	371	417	464
Factor		0.81	0.87	0.96	1.03	1.09	1.14	1.19	1.23	1.27	1.30

- For any other specific gravity (G'), the pressure drop (⊿P') may be obtained from the formula below.

⊿P' = ⊿P (G'/0.850)

Changeover Time

Changeover time, T_2 and T_4, in particular, varies according to the hydraulic circuit and operating conditions. As an example, the following figures show how the measurement is made.

Test Circuit

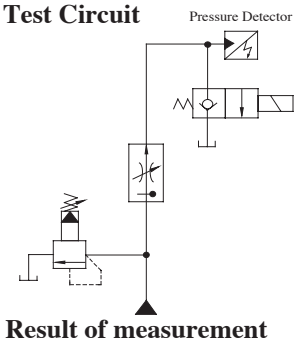

Result of measurement

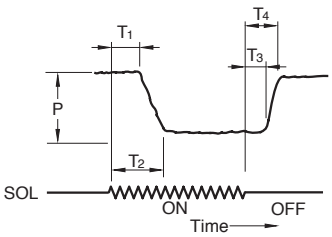

Model Number	Solenoid Types	Condition: Pressure "P" MPa (PSI)	Condition: Flow Rate L/min (U.S.GPM)	Shifting time (ms): SOL "ON"(Open→Close) T_1	SOL "ON"(Open→Close) T_2 (ex.)	SOL "OFF"(Open→Close) T_3	SOL "OFF"(Open→Close) T_4 (ex.)
CDSC-01	DC	10 (1450)	15 (4.0)	21.4	44.0	29.0	38.4
		21 (3050)	15 (4.0)	30.6	47.0	27.0	44.0
CDS✻-03	AC	7 (1020)	50 (13.2)	10.0	86.0	20.0	44.0
		14 (2030)	50 (13.2)	11.0	43.0	12.0	54.0
	DC	7 (1020)	50 (13.2)	22.0	104.0	44.0	66.0
		14 (2030)	50 (13.2)	24.0	60.0	41.0	73.0
	AC→DC Rectified	7 (1020)	50 (13.2)	27.0	100.0	114.0	146.0
		14 (2030)	50 (13.2)	32.0	66.0	108.0	142.0

CDSC-01-C-D24-10/1090

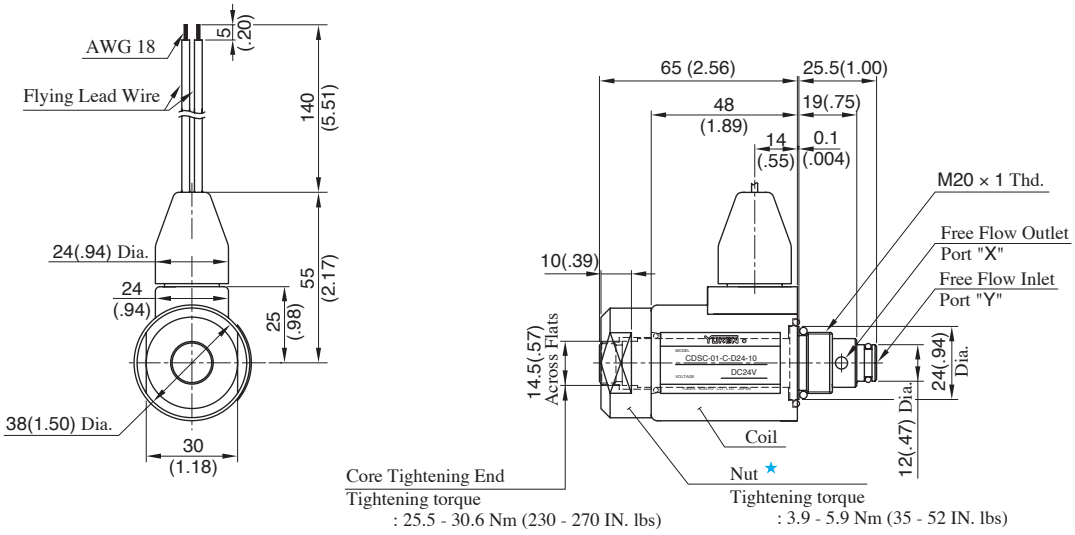

DIMENSIONS IN MILLIMETRES (INCHES)

Details of Mounting Holes

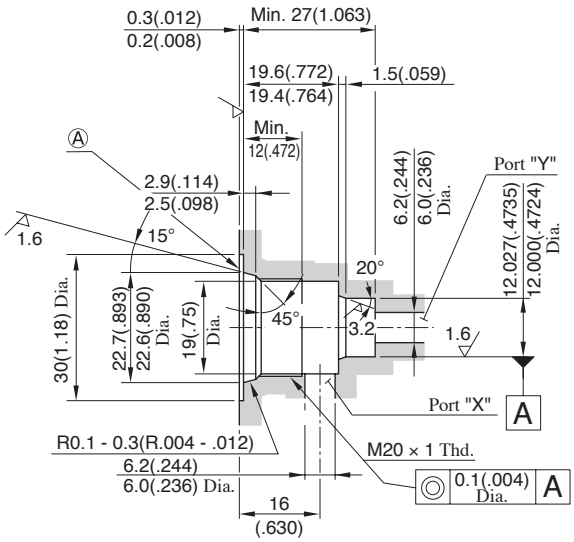

How to Mount

When mounting, the following steps must be followed:

1. Loosen the nut★, then remove the coil.
2. Thread the cartridge, making sure that the collar 24 (.94) Dia. of the cartridge is well fitted to the component surface (Ⓐ surface in the left drawing).
3. Attach the coil and secure it with a nut.

Note: The fitting portion of o-rings should have a good machined finish.

CDSC-03-C-A∗-21/2190

Models with AC Solenoids

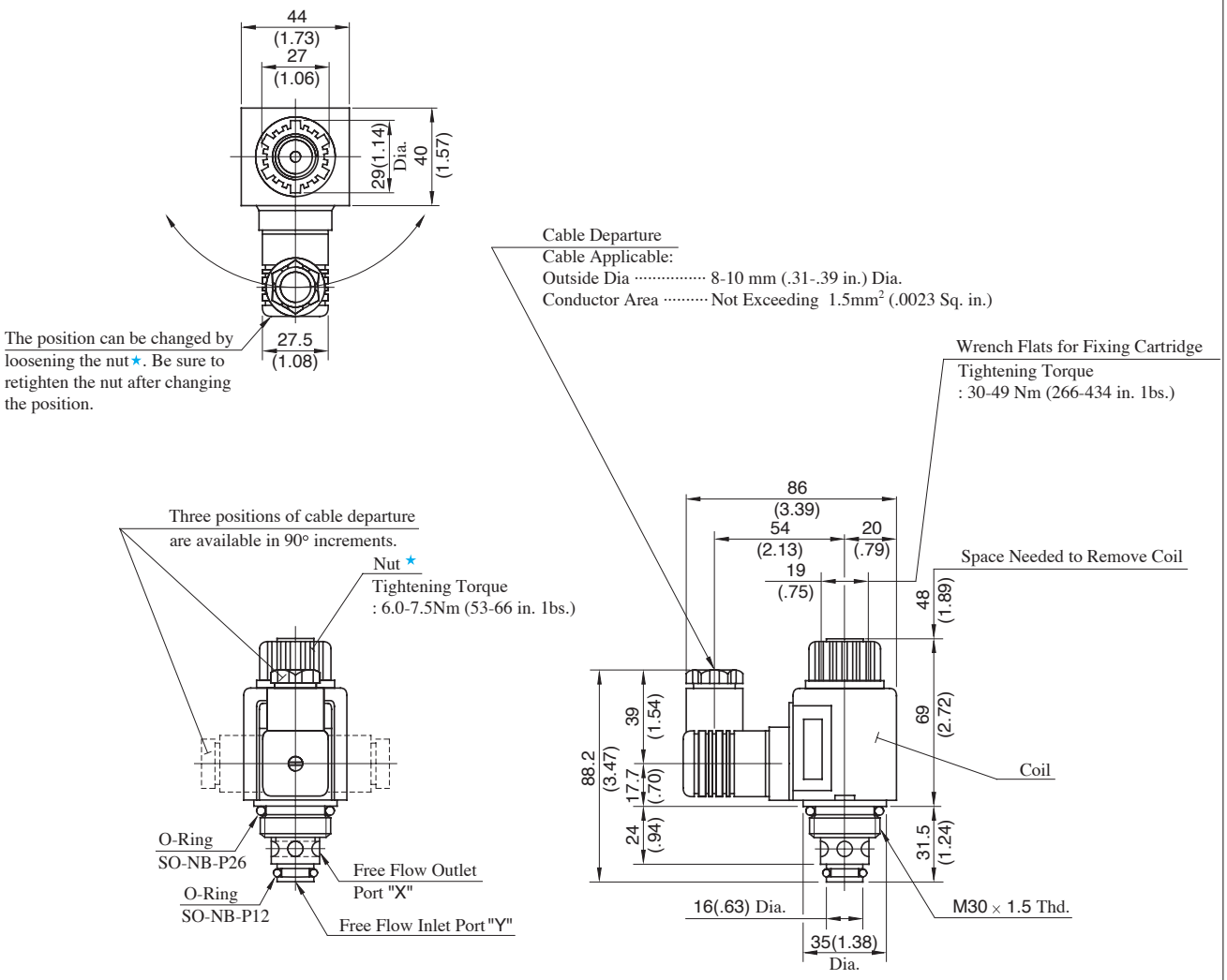

DIMENSIONS IN MILLIMETRES (INCHES)

Details of Mounting Holes

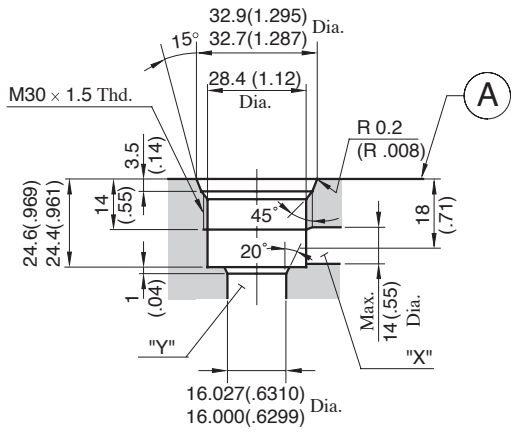

How to Mount

When mounting, the following steps must be followed:

1. Loosen the nut★, then remove the coil.
2. Thread the cartridge, making sure that the collar 35 (1.38) Dia. of the cartridge is well fitted to the component surface (Ⓐ surface in the left drawing).
3. Attach the coil and secure it with a nut.

Note: The fitting portion of O-rings should have a good machined finish.

CDSC-03-C-D∗-21/2190

Models with DC Solenoids

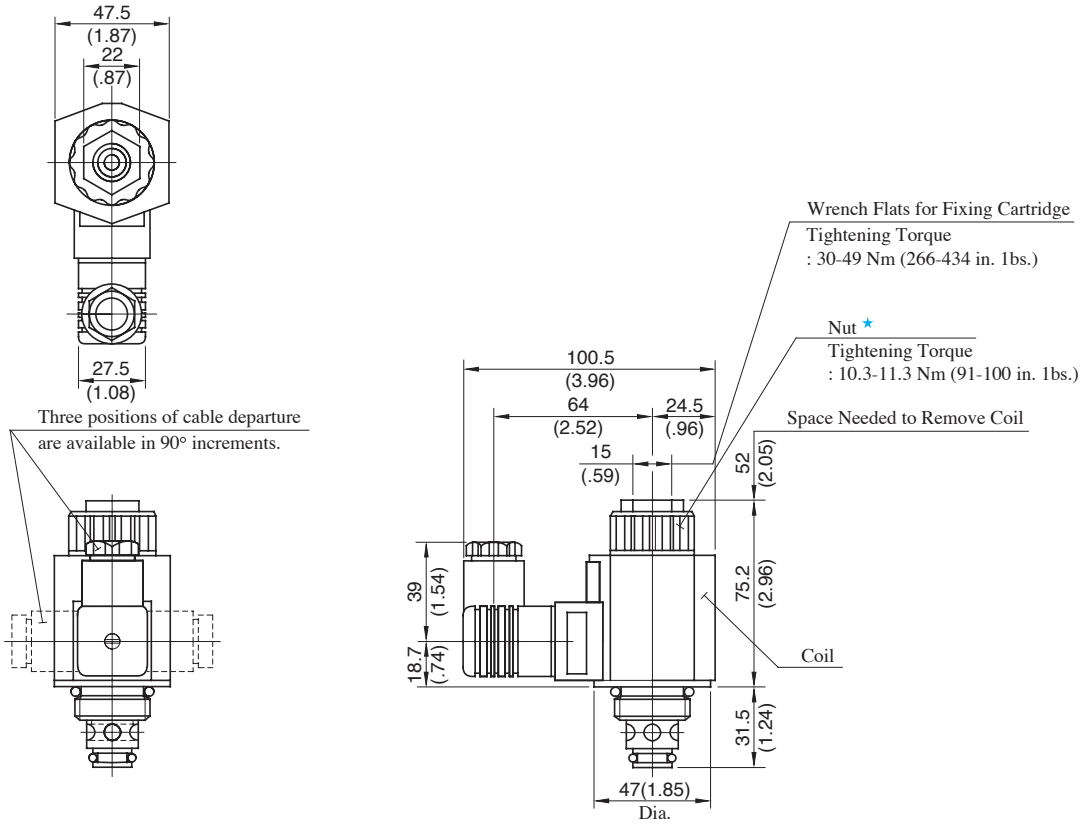

For other dimensions, refer to the "Models with AC Solenoids".

DIMENSIONS IN MILLIMETRES (INCHES)

CDSC-03-C-R∗-21/2190

Models with R Type Solenoids

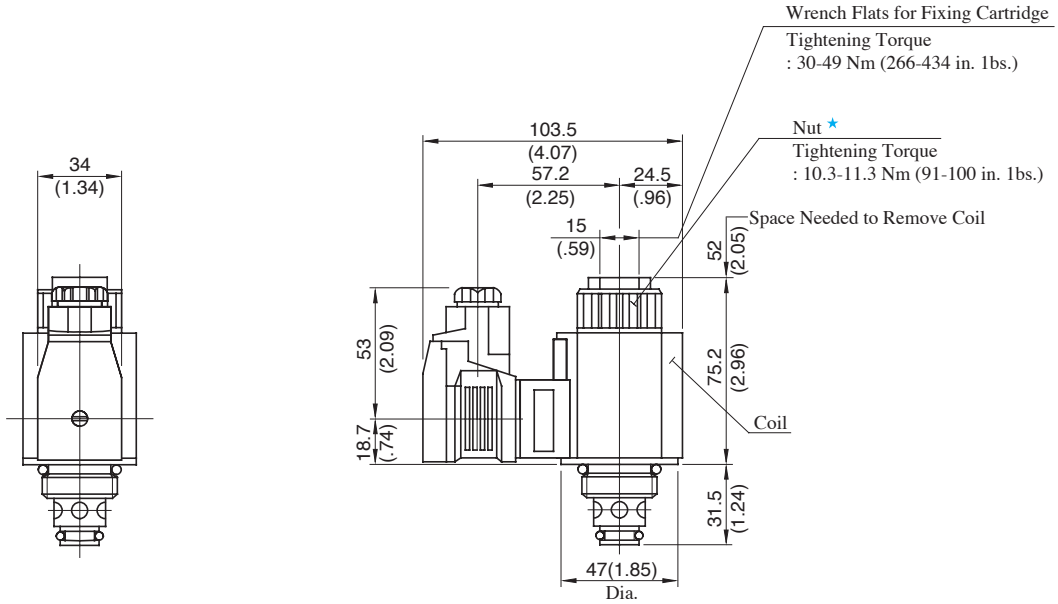

For other dimensions, refer to the "Models with AC Solenoids".

CDST-03, 03W-C-∗-21/2180/2190

Models with AC Solenoids

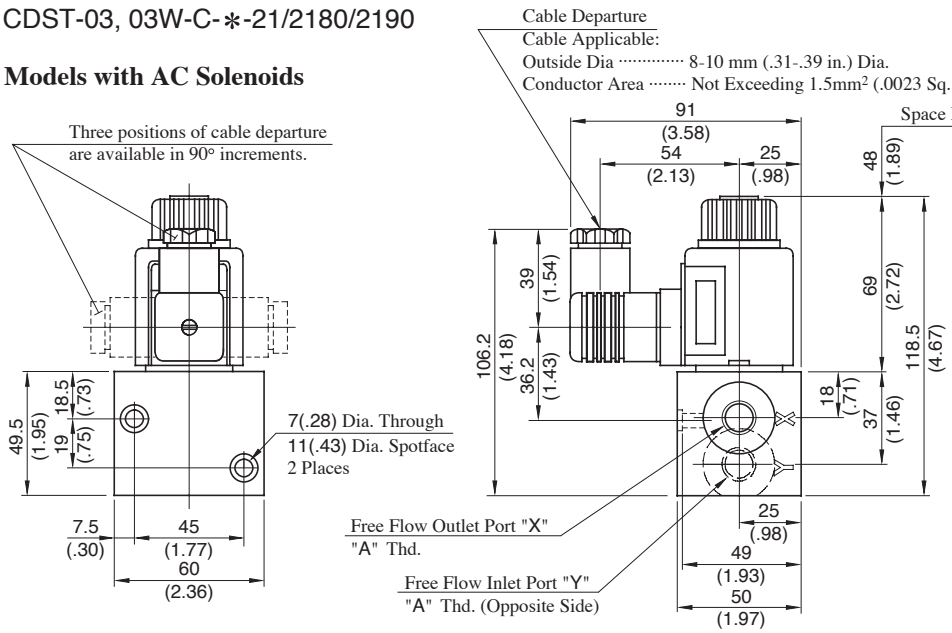

Model Numbers	"A" Thd.
CDST-03W-C-∗-21	Rc 1/4
CDST-03-C-∗-21	Rc 3/8
CDST-03W-C-∗-2180	1/4 BSP.F
CDST-03-C-∗-2180	3/8 BSP.F
CDST-03W-C-∗-2190	1/4 NPT
CDST-03-C-∗-2190	3/8 NPT

Note: The position of cable departure can be changed. For the detail, refer to CDSC-03 on the previous page.

Models with DC Solenoids

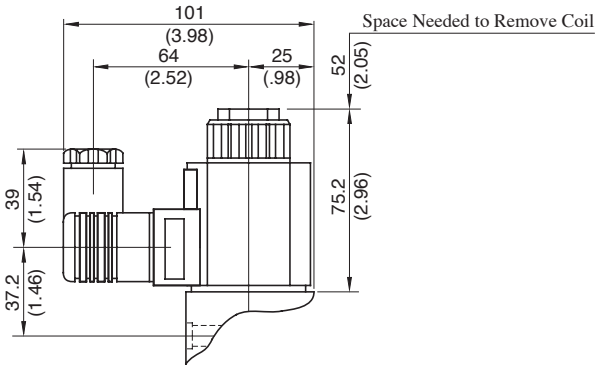

Models with R Type Solenoids

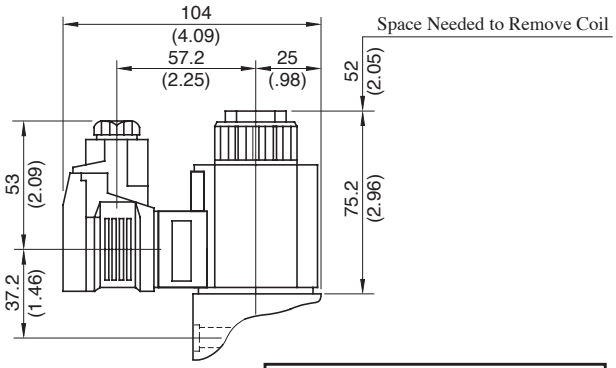

For other dimensions, refer to the "Models with AC Solenoids".

DIMENSIONS IN MILLIMETRES (INCHES)

CDSG-03-C-∗-21/2190

Models with AC Solenoids

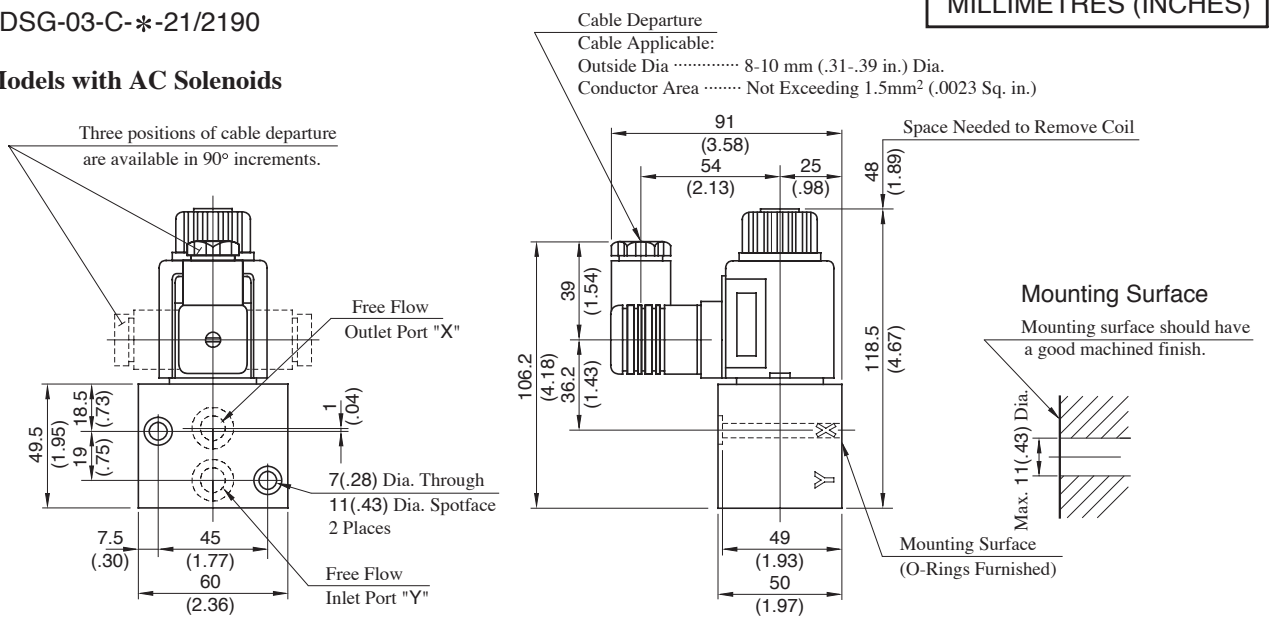

Note 1: For models with DC solenoids and models with R type solenoids, refer to CDST-03, 03W.
2: The position of cable departure can be changed. For the detail, refer to CDSC-03 on the previous page.

List of Seals and Coil Ass'y

CDSC-01-C-D24-10/1090

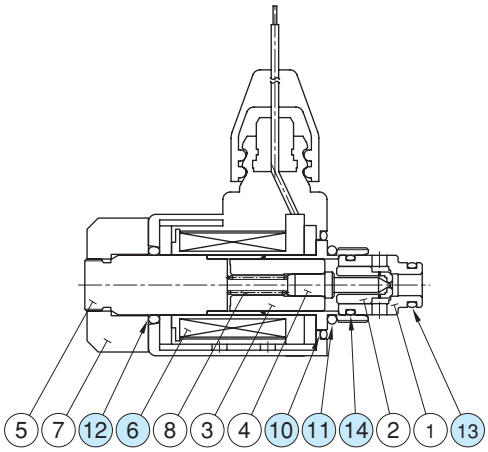

Item	Name of Parts	Part Numbers	Qty.	Seal Kit Numbers
6	Coil Ass'y	2697-VK317470-3	1	————
10	O-Ring	TK280163-7	1	KS-CDSC-01-10
11	O-Ring	SO-NB-P18	1	
12	O-Ring	SO-NB-P16	1	
13	O-Ring	SO-NB-P9	1	
14	O-Ring	SO-NB-A014	1	

Note: When ordering the seals, please specify the seal kit number.

List of Seals, Solenoid Ass'y, Coil Ass'y and Connector Ass'y

CDST-03∗-C-∗-21/2180/2190
CDSC-03-C-∗-21/2190
CDSG-03-C-∗-21/2190

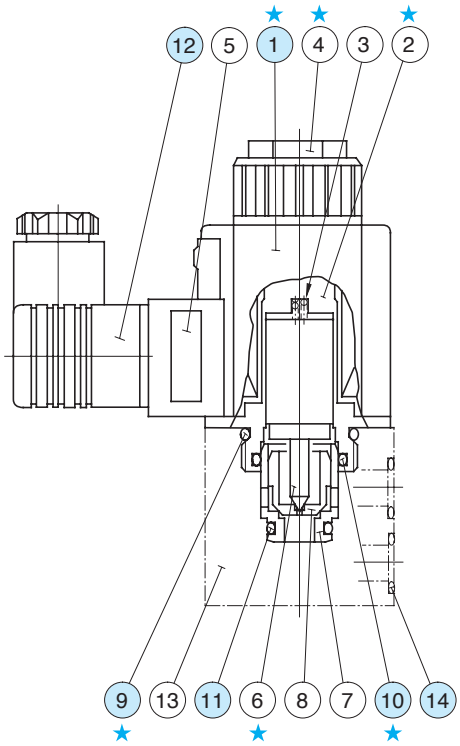

Solenoid assembly is composed of the parts marked with ★.

List of Seals

Item	Name of Parts	Part Numbers	Qty.	Remarks
9	O-Ring	SO-NB-P26	1	———
10	O-Ring	SO-NB-P20	1	———
11	O-Ring	SO-NB-P12	1	———
14	O-Ring	SO-NB-A014	2	only for CDSG

Note: When ordering the seals, please specify the seal kit number from the table right.

List of Seal Kits

Valve Model Numbers	Seal Kit Numbers
CDSC-03-C-∗-21∗	KS-CDSC-03-20
CDST-03∗-C-∗-21∗	
CDSG-03-C-∗-21∗	KS-CDSG-03-20

Solenoid Ass'y, Coil Ass'y and Connector Ass'y No.

Valve Model No.	Solenoid Ass'y No.	① Coil No.	⑫ Connector Ass'y No.
CDS∗-03∗-C-A100	CSA1-100-20	C-CSA1-100-20	GDM-211-B-11
CDS∗-03∗-C-A120	CSA1-120-20	C-CSA1-120-20	
CDS∗-03∗-C-A200	CSA1-200-20	C-CSA1-200-20	
CDS∗-03∗-C-A240	CSA1-240-20	C-CSA1-240-20	
CDS∗-03∗-C-D12	CSD1-12-20	C-SD1-12-50	GDM-211-B-11
CDS∗-03∗-C-D24	CSD1-24-20	C-SD1-24-50	
CDS∗-03∗-C-D48	CSD1-48-20	C-SD1-48-50	
CDS∗-03∗-C-R100	CSR1-100-20	C-SR1-100-50	GDME-211-R-B-10
CDS∗-03∗-C-R200	CSR1-200-20	C-SR1-200-50	

Change of supply voltage

The supply voltage can be changed by replacing the coil.

Interchangeability between Current and New Design

Because of solenoid assembly improvements, CDS∗-03∗ has been model-changed (design 20 to design 21).

Specifications and Characteristics

There are no changes in the specifications and characteristics of the valves themselves.

Solenoid Ratings

There are changes in the inrush current, holding current and power as shown below. No other changes.

Electric Source	Coil Type	Frequency (Hz)	Voltage (V)		Current & Power at Rated Voltage					
			Source Rating	Serviceable Range	Inrush (A)		Holding (A)		Power (W)	
					New	Current	New	Current	New	Current
AC	A100	50	100	80 - 110	1.12	1.30	0.55	0.52	—	—
		60	100	90 - 120	0.95	1.08	0.40	0.39		
			110		0.86	1.19	0.36	0.47		
	A120	50	120	96 - 132	0.93	1.08	0.46	0.45		
		60		108 - 144	0.79	0.98	0.33	0.33		
	A200	50	200	160 - 220	0.56	0.65	0.28	0.27		
		60	200	180 - 240	0.48	0.54	0.20	0.20		
			220		0.43	0.59	0.18	0.24		
	A240	50	240	192 - 264	0.47	0.55	0.23	0.23		
		60		216 - 288	0.40	0.45	0.17	0.17		
DC (K Series)	D12	—	12	10.8 - 13.2	—	—	2.20	2.40	26	29
	D24		24	21.6 - 26.4			1.10	1.20		
	D48		48	43.2 - 52.8			0.55	0.60		
AC→DC Rectified	R100	50/60	100	90 - 110	—	—	0.30	0.32	26	29
	R200		200	180 - 220			0.15	0.17		

Interchangeability in Installation

AC Solenoids

Most items of mounting are interchangeable except the dimensions as shown below. In addition, the size of the spanner (core end faces) for locking the CDSC cartridges has been changed to 15-19 mm across flats.

Current: Design 20

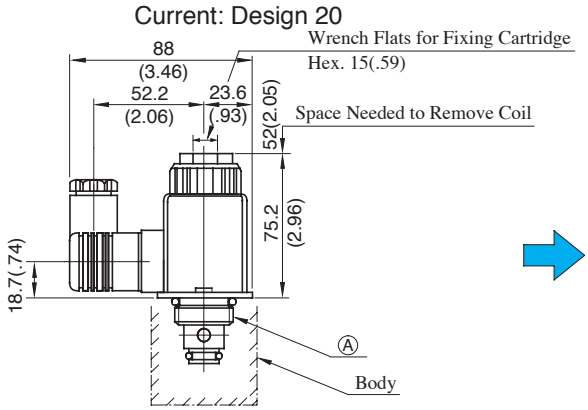

New: Design 21

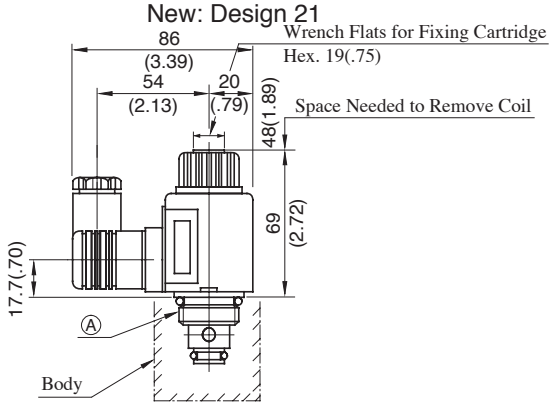

DC/R Type Solenoids

Most items of mounting are interchangeable except the dimensions as shown below. The solenoid shape changed from circular to hexagonal. No change in the size 15 mm of the spanner for locking cartridges.

Current: Design 20

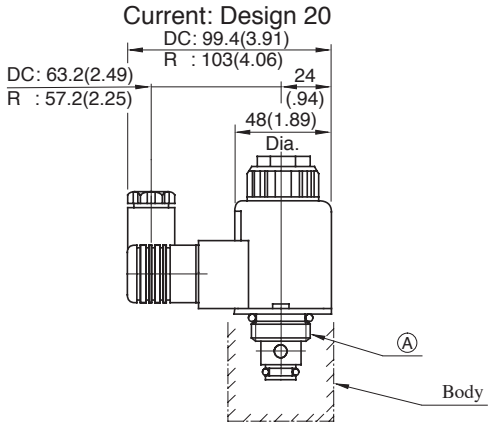

New: Design 21

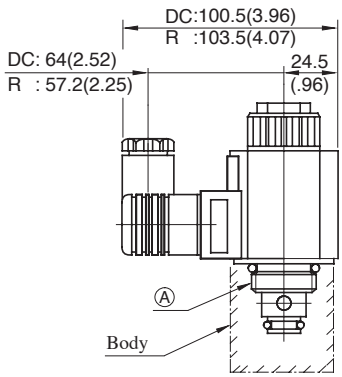

Note: The above drawings give illustrations for the cartridge type. The dimension Ⓐ at the mounting section remains unchanged. In case of the Thread Connection Type and Gasket Mounting Type, a body is mounted to the hatched section. The dimensions of the body remain unchanged.

Shut-off Type Solenoid Operated Directional Valves

The shut-off type solenoid operated directional valves are poppet type solenoid operated two-way directional valves developed to meet the needs of this age such as energy and resources saving.

- **High-response**
  High response is provided by the poppet design.
- **Smallest internal leakage**
  Internal leakage are very small, less than 5 drips per min., which is achieved by the poppet design.
- **Two mounting types: cartridge and sub-plate**
  Mounting dimensions for both types conform to ISO standard.
- **Water-proof type (conforming to JIS D 0203 Water Spray Test 32) is also available.**

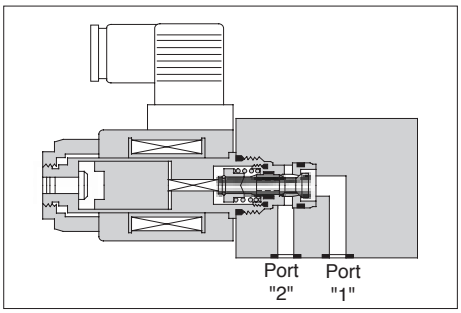

Graphic Symbol

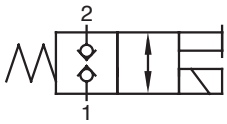

Specifications

Model Numbers	Max. Flow ★1 L/min (U.S.GPM)	Max. Operating Pressure: Port "1" ★2 "1" to "2" Flow	Max. Operating Pressure: Port "1" ★2 "2" to "1" Flow	Max. Operating Pressure: Port "2"	Max. Changeover Frequency min^{-1} (Cycles/Min)	Internal leakage cm^3/min (cu.in./min)	Approx. Mass kg(1bs.) AC	Approx. Mass kg(1bs.) DC
DSPC-01-C-∗-20∗ ★3 ★4	40 (10.6)	10 (1450)	16 (2320)	25 (3630)	300	or Less 0.25 (.015)	0.45 (1.0)	0.6 (1.3)
DSPG-01-C-∗-20∗ ★3							1.45 (3.2)	1.6 (3.5)
DSPC-03-C-∗-10∗ ★3	80 (21.1)				240	or Less 0.25 (.015)	0.9 (2.0)	1.0 (2.2)
DSPG-03-C-∗-10∗ ★3							3.8 (8.4)	3.9 (8.6)

★1. Maximum flow rates depend on operating conditions. For details, see page 491.
★2. Do not connect port "1" to a line subjected to surge pressures. In addition, if you use port "1" for tank line, be sure to keep the end of the line in the oil.
★3. Protections against dust and water conform to the international electric standard (IEC) PUBL 529 IP64.
★4. In the case of "DSPC-01-C-D∗", use iron material for installation body (cabity).

Model Number Designation

F-	DSP	G	-01	-C	-D24	-20	*
Special Seals	Series Number	Type of Connection	Valve Size	Valve Type	Coil Type	Design Number	Design Standard
F: Special Seals for Phosphate Ester Type Fluids (Omit if not required)	**DSP**: Shut-Off Type Solenoid Operated Directional Valves	**C**: Cartridge Type **G**: Sub-plate Mounting	**01** **03**	**C**: Normally Closed	AC **A 100** **A 200** DC **D12** **D24**	**20** **10**	**None**: Japanese Std. "JIS" & European Design Std. **90**: N. American Design Std.

Solenoid Ratings

Electric Source	Coil Type	Frequency (Hz)	Voltage (V)		Current & Power at Rated Voltage					
			Source Rating	Serviceable Range	Inrush (A) ★1		Holding (A)		Power (W)	
					01	03	01	03	01	03
AC	A100	50	100	80 - 110	2.42	5.37	0.51	0.90	—	—
		60	100	90 - 120	2.14	4.57	0.37	0.63		
			110		2.35	5.03	0.44	0.77		
	A200	50	200	160 - 220	1.21	2.69	0.25	0.45		
		60	200	180 - 240	1.07	2.29	0.19	0.31		
			220		1.18	2.52	0.22	0.38		
DC ★2 (K Series)	D12	—	12	10.8 - 13.2	—	—	2.45	3.16	29	38
	D24		24	21.6 - 26.4			1.23	1.57		

★1. Inrush current in the above table show rms values at maximum stroke.
★2. K-Series DC Solenoid which has a reputation for excellent DC control is employed.

Sub-plate

Model Numbers	Japanese Standard "JIS"		European Design Standard		N.American Design Standard		Approx. Mass kg (lbs.)
	Sub-plate Model Numbers	Thread Size	Sub-plate Model Numbers	Thread Size	Sub-plate Model Numbers	Thread Size	
DSPG-01	DSGM-01-31	Rc 1/8	DSGM-01-3180	1/8 BSP.F	DSGM-01-3190	1/8 NPT	0.8 (1.8)
	DSGM-01X-31	Rc 1/4	DSGM-01X-3180	1/4 BSP.F	DSGM-01X-3190	1/4 NPT	0.8 (1.8)
	DSGM-01Y-31	Rc 3/8	—	—	DSGM-01Y-3190	3/8 NPT	0.8 (1.8)
DSPG-03	DSGM-03-40	Rc 3/8	DSGM-03-2180	3/8 BSP.F	DSGM-03-2190	3/8 NPT	3.0 (6.6)
	DSGM-03X-40	Rc 1/2	DSGM-03X-2180	1/2 BSP.F	DSGM-03X-2190	1/2 NPT	3.0 (6.6)
	DSGM-03Y-40	Rc 3/4	DSGM-03Y-2180	3/4 BSP.F	DSGM-03Y-2190	3/4 NPT	4.7 (10.4)

● Sub-plates are available. Specify the sub-plate model number from the table above. When sub-plates are not used, the mounting surface should have a good machined finish.

Mounting Bolts

Four socket head cap screws in the table below are included.

Valve Model Numbers	Descriptions	Soc. Hd. Cap Screw (4 pcs.)	Tightening Torque
DSPG-01	Japanese Standard "JIS" and European Design Standard	M5 × 50 Lg.	5-7 Nm (44 -62 in. 1bs.)
	N. American Design Standard	No. 10-24 UNC × 2 Lg.	
DSPG-03	Japanese Standard "JIS" and European Design Standard	M6 × 80 Lg.	12-15 Nm (106 -133 in. 1bs.)
	N. American Design Standard	1/4-20 UNC × 3-1/4 Lg.	

Typical Performance Characteristics at Viscosity 30 mm²/s (141 SSU) [ISO VG 46 oils, 50°C(122°F)]

Maximum Flow Rate

The zone under each shaded line denotes the flow rate ranges being free of trouble in changeover.

DSPC/DSPG-01

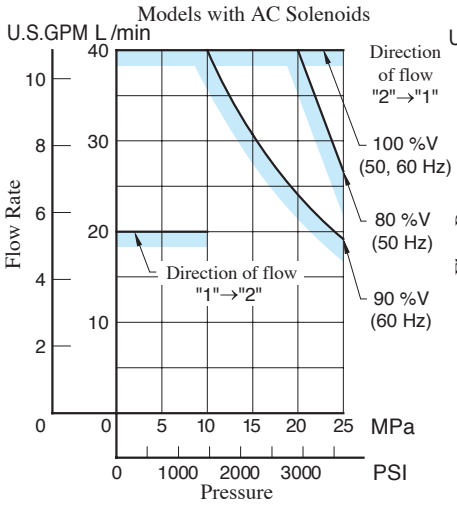

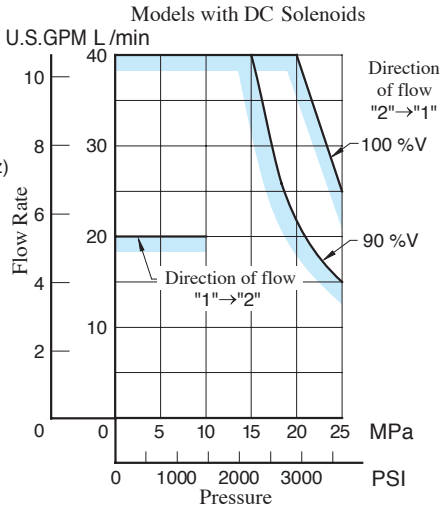

DSPC/DSPG-03

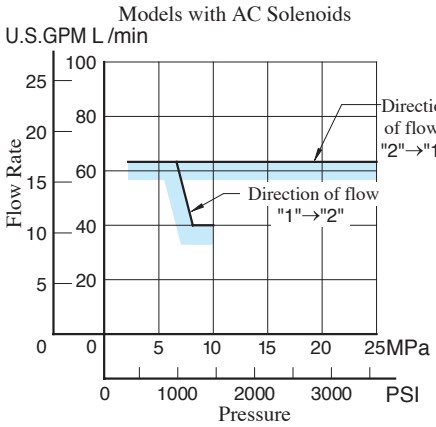

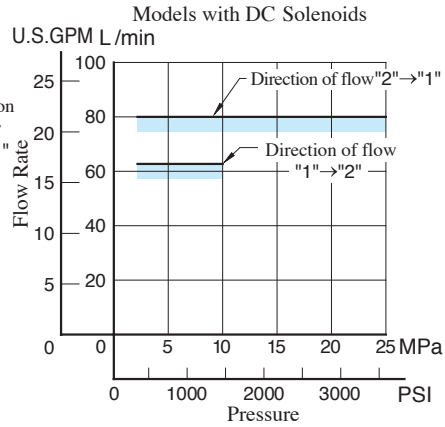

Typical Changeover Time

[Test Conditions]

- Pressure: 15 MPa (2180 PSI)
- Flow Rate: (01) 30 L/min (7.9 U.S.GPM)
  (03) 63 L/min (16.6 U.S.GPM)
- Viscosity: 30 mm²/s (141 SSU)
- Voltage: 100 % V
  (After coil temperature rise and saturates)
- Direction of Flow: "2" → "1"

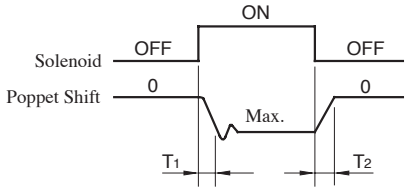

Model Numbers	Shifting Time (ms)	
	T_1	T_2
DSPC/DSPG-01-C-A∗	22	30
DSPC/DSPG-01-C-D∗	69	14
DSPC/DSPG-03-C-A∗	22	20
DSPC/DSPG-03-C-D∗	60	80

Pressure Drop

DSPC/DSPG-01

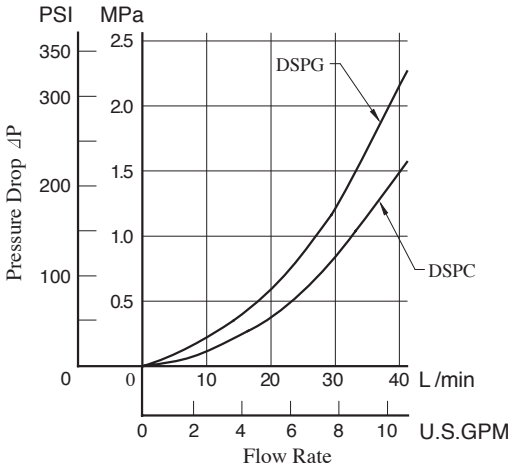

- For any other viscosity, multiply the factors in the table below.

Viscosity	mm²/s	15	20	30	40	50	60	70	80	90	100
	SSU	77	98	141	186	232	278	324	371	417	464
Factor		0.81	0.87	0.96	1.03	1.09	1.14	1.19	1.23	1.27	1.30

DSPC/DSPG-03

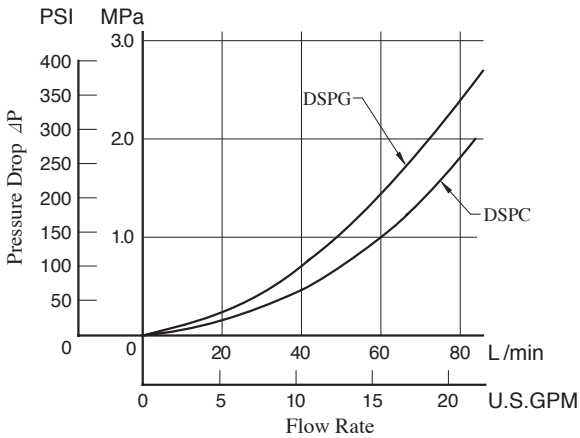

- For any other specific gravity (G'), the pressure drop (⊿P') may be obtained from the formula below.

$$\Delta P' = \Delta P(G'/0.850)$$

DSPC-01-C-∗-20/2090

Mounting Surface: ISO 7789 20-01-0-93

Models with AC Solenoids

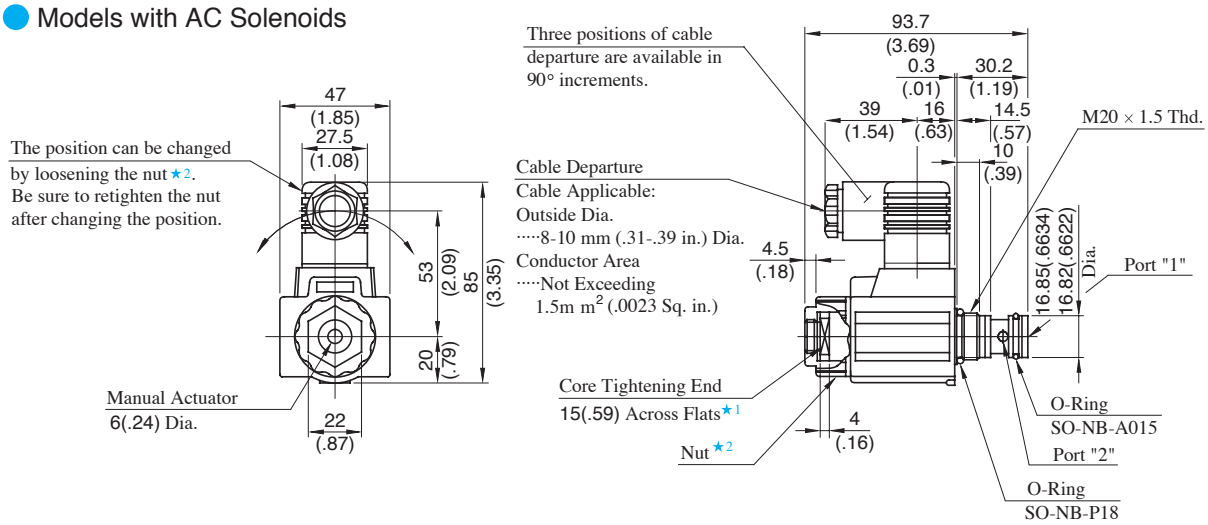

★1. Tightening torque for iron core assembly: 30 - 50 Nm (266-443 IN. lbs.)
★2. Tightening torque for nuts: 10.3 - 11.3 Nm (91-100 IN. lbs.)

Models with DC Solenoids

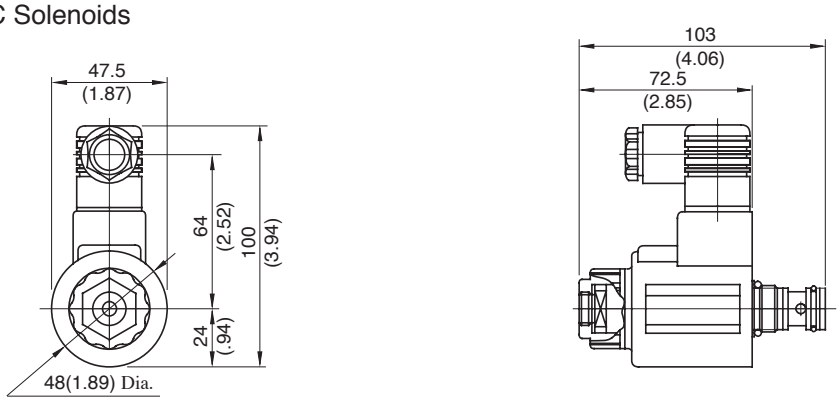

● For other dimensions, refer to the "Models with AC Solenoids".

Details of Mounting Holes

DIMENSIONS IN MILLIMETRES (INCHES)

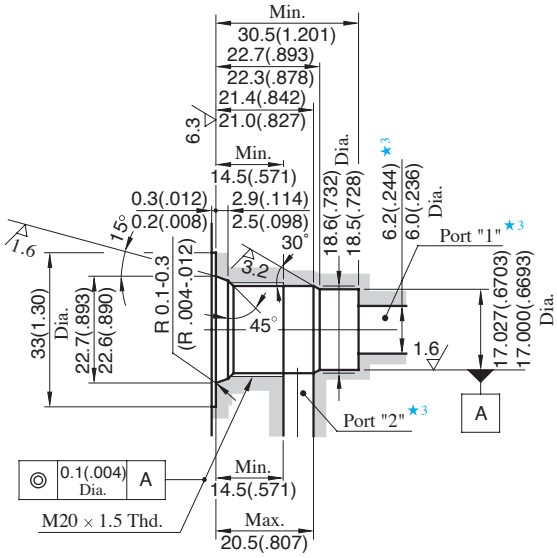

How to Mount

When mounting, the following steps must be followed.

1. Loosen the coil fastening the nut and remove the coil.
2. Making use of the core tightening end, screw the cartridge in.
3. Attach the coil and fix it with the nut.

★3. Port diameter of 6.2 (.244) Dia. recommended.
★4. Use iron materials for the mounting section.

DSPC-03-C-∗-10/1090

Mounting Surface: ISO 7789 27-01-0-93

Models with AC Solenoids

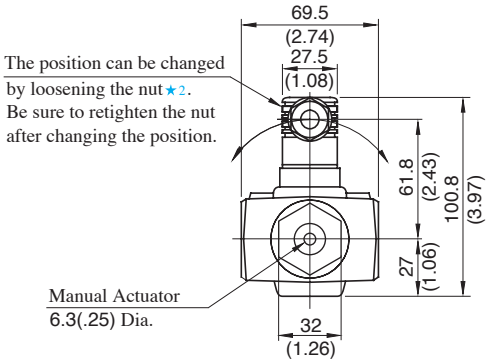

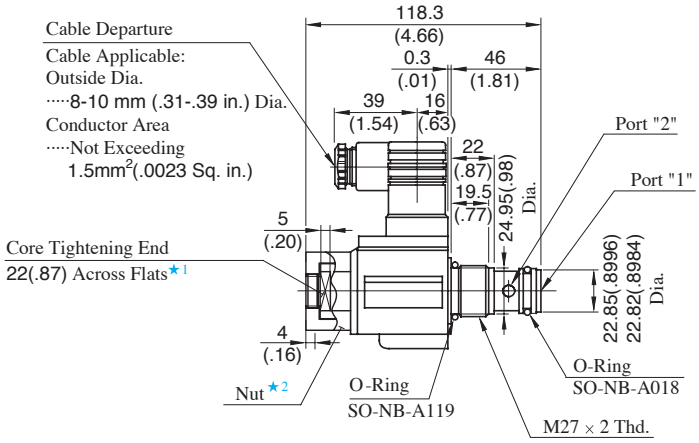

★1. Tightening torque for iron core assembly: 110-140 Nm (970-1240 IN. lbs.)
★2. Tightening torque for nuts: 8.5-10.5 Nm (75-93 IN. lbs.)

Models with DC Solenoids

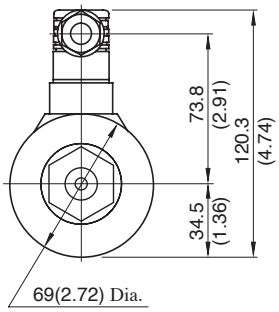

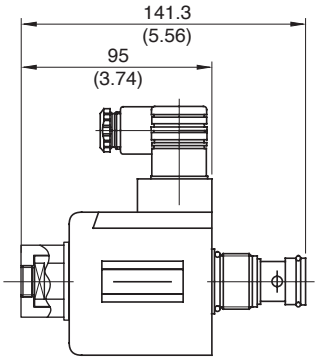

● For other dimensions, refer to the "Models with AC Solenoids".

Details of Mounting Holes

DIMENSIONS IN MILLIMETRES (INCHES)

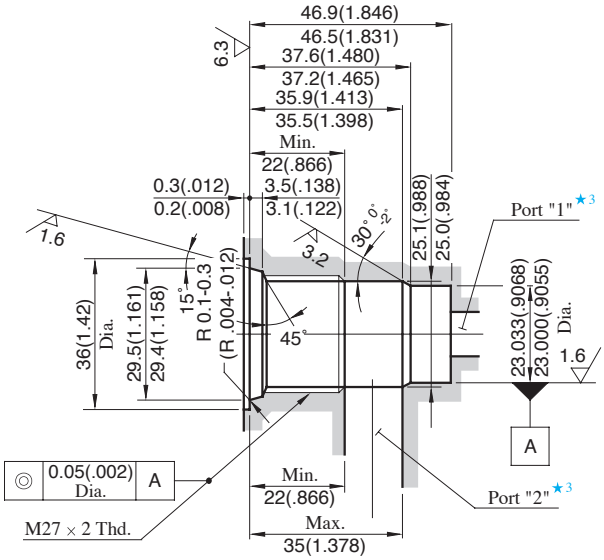

How to Mount

When mounting, the following steps must be followed.

1. Loosen the coil fastening the nut and remove the coil.
2. Making use of the core tightening end, screw the cartridge in.
3. Attach the coil and fix it with the nut.

★3. A recommendable port dia. is 11 (.433) mm.
★4. Use iron materials for the mounting section.

Mounting Surface: ISO 4401-AB-03-4-A

DSPG-01-C-∗-20/2090

Models with AC Solenoids

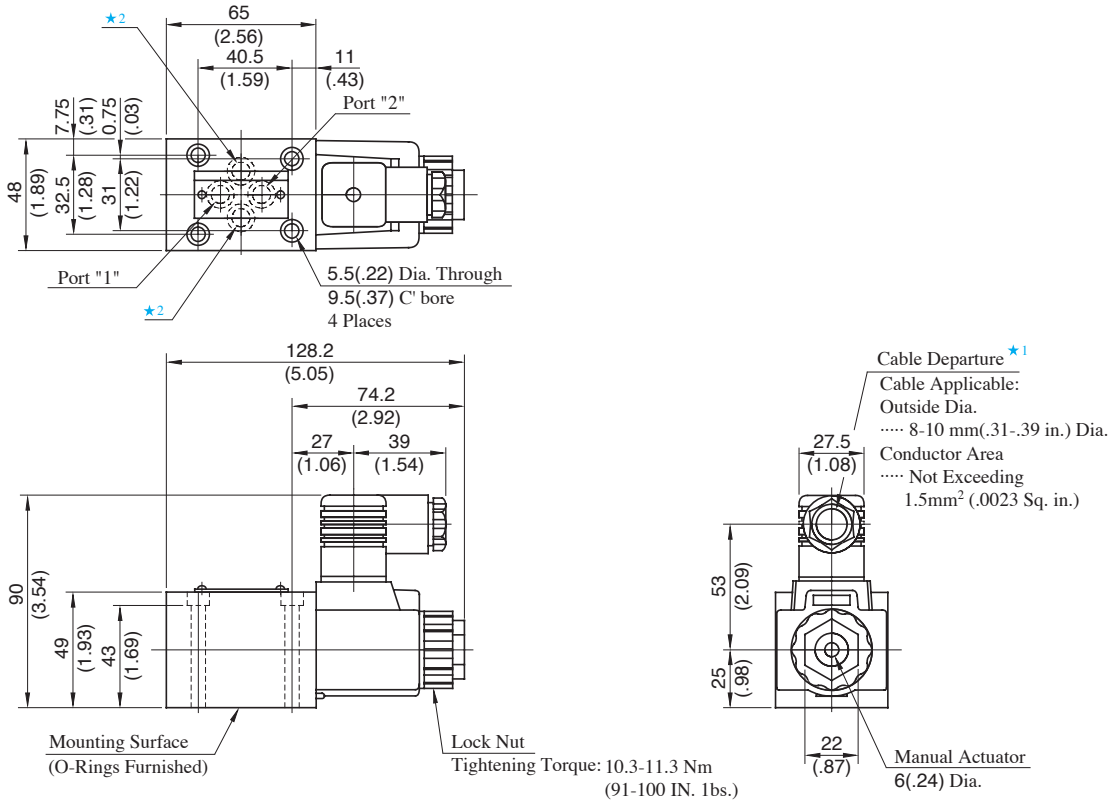

★1. The location and the position of the cable departure can be changed. For details, see the cartridge type.

★2. These ports (2) are not used. In addition, the body has the O-ring grooves and O-rings are included in the body.

★3. The mounting dimensions conform to ISO 4401-AB-03-4-A. Ports A and B are used as ports "2" and "1" respectively.

★4. O-rings for ports: SO-NB-P9

DIMENSIONS IN MILLIMETRES (INCHES)

Models with DC Solenoids

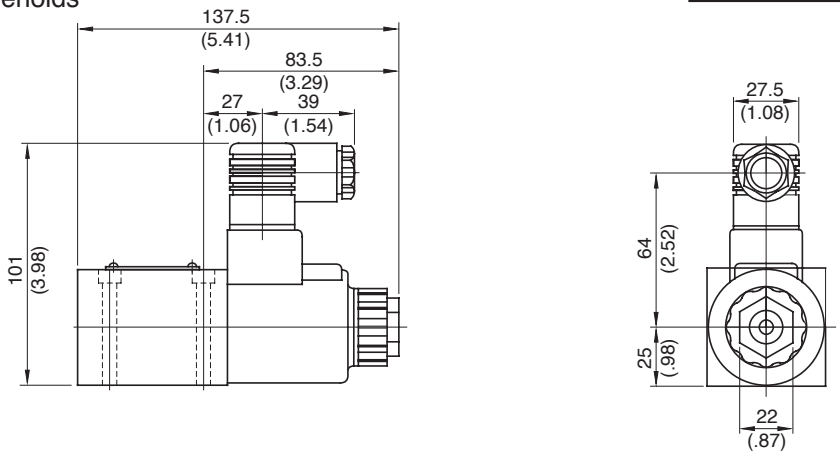

● For other dimensions, refer to the "Models with AC Solenoids".

Mounting Surface: ISO 4401-AC-05-4-A

DSPG-03-C-∗-10/1090

Models with AC Solenoids

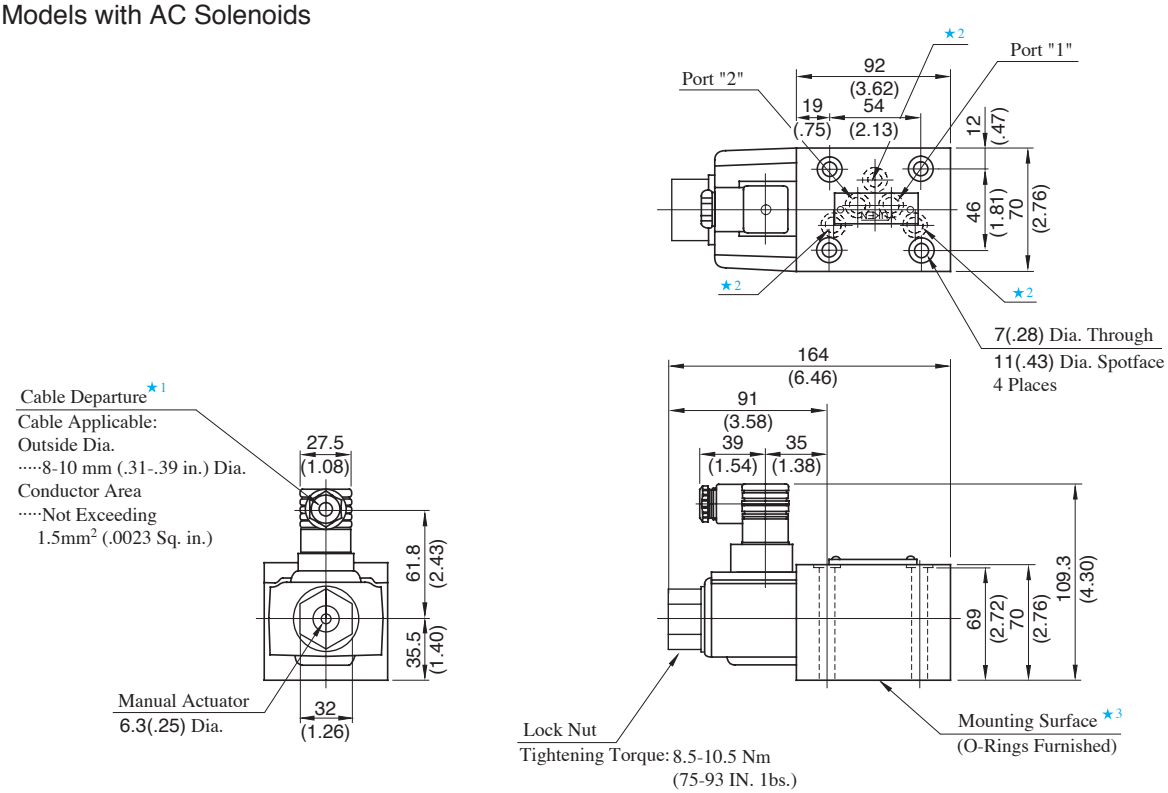

★1. The location and the position of the cable departure can be changed. For details, see the cartridge type.

★2. These ports (3) are not used. In addition, the body has the O-ring grooves and O-rings are included in the body.

★3. The dimensions of mounting surface conform to ISO 4401-AC-05-4-A. Ports A and B are used as port 2 and port 1 respectively.

★4. O-rings for each port: SO-NB-A014

DIMENSIONS IN MILLIMETRES (INCHES)

Models with DC Solenoids

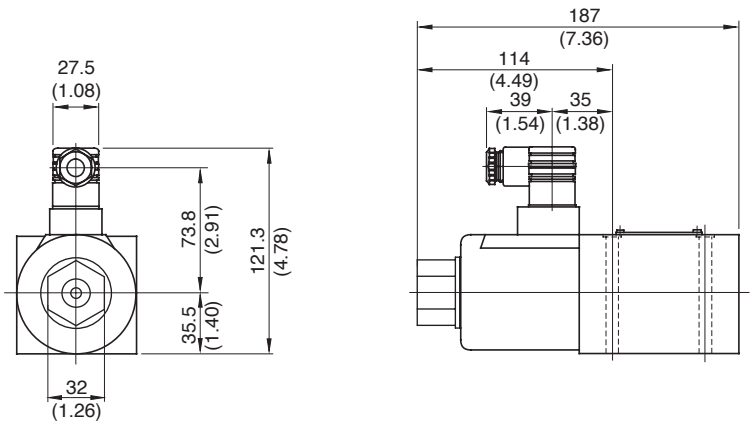

● For other dimensions, refer to the "Models with AC Solenoids".

List of Seals, Solenoid Ass'y, Coil Ass'y and Connector Ass'y

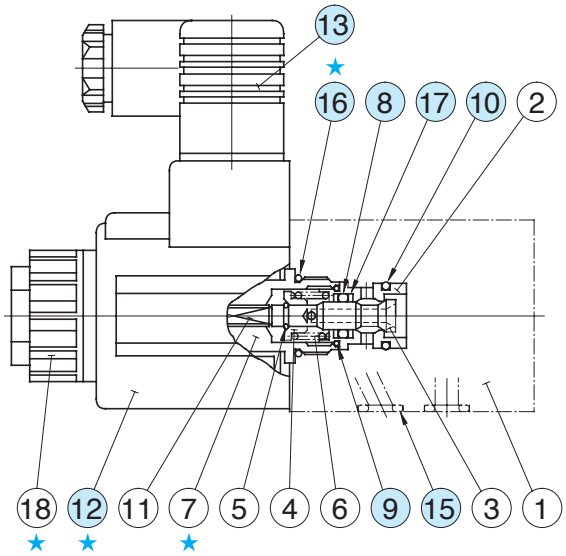

Solenoid assembly is composed of the parts marked with ★.

List of Seals

Item	Name of Parts	DSP∗-01		DSP∗-03		Remarks
		Part Numbers	Qty.	Part Numbers	Qty.	
8	O-Ring	SO-NA-P8	1	SO-NA-P12	1	———
9	O-Ring	SO-NB-A014	1	SO-NB-A017	1	———
10	O-Ring	SO-NB-A015	1	SO-NB-A018	1	———
15	O-Ring	SO-NB-P9	4	SO-NB-A014	5	———
16	O-Ring	SO-NB-P18	1	SO-NB-A119	1	only for "DSPG"
17	Back Up Ring	5701-VK413831-9	2	2691-VK418550-0	2	———

Note: When ordering the seals, specify the seal kit number from the table below.

List of Seal Kits

Valve Model Numbers	Seal Kit Numbers
DSPC-01-C-∗-20∗	KS-DSPC-01-C-10
DSPC-03-C-∗-10∗	KS-DSPC-03-C-10
DSPG-01-C-∗-20∗	KS-DSPG-01-C-10
DSPG-03-C-∗-10∗	KS-DSPG-03-C-10

Solenoid Ass'y, Coil Ass'y and Connector Ass'y No.

Valve Model No.	Solenoid Ass'y No.	⑫ Coil No.	⑬ Connector No.
DSPC/DSPG-01-C-A100-20/2090	SA1-100-N-6055	C-SA1-100-N-60	GDM-211-B-11
DSPC/DSPG-01-C-A200-20/2090	SA1-200-N-6055	C-SA1-200-N-60	
DSPC/DSPG-01-C-D12-20/2090	SD1-12-N-6055	C-SD1-12-N-60	
DSPC/DSPG-01-C-D24-20/2090	SD1-24-N-6055	C-SD1-24-N-60	
DSPC/DSPG-03-C-A100-10/1090	SA3-100-N-5130	C-SA3-100-N-50	
DSPC/DSPG-03-C-A200-10/1090	SA3-200-N-5130	C-SA3-200-N-50	
DSPC/DSPG-03-C-D12-10/1090	SD3-12-N-5130	C-SD3-12-N-50	
DSPC/DSPG-03-C-D24-10/1090	SD3-24-N-5130	C-SD3-24-N-50	

Check/Pilot Controlled Check Valves

Valve Type	Graphic Symbols	Max. Operating Pressure MPa (PSI)	U.S.GPM .3 .5 1 2 5 10 20 50 100 200 500 1000 / L/min 1 2 5 10 20 50 100 200 500 1000 2000 5000	Page
Check Valves		25 (3630)	In-Line (CIT) 02 03 06 10 Right Angle (CRT/CRG) 03 06 10 Right Angle, Flanged Connection (CRF) 10 16 24	498
Pilot Operated Check Valves		25 (3630)	Threaded Connection(CP∗T) Sub-plate Mounting(CP∗G) 03 06 10 Flanged Connection(CP∗F) 10 16	504

In-Line Check Valves

These valves allow free flow in one direction and prevent flow in the reverse direction. Cracking pressure specified is the pressure required to open the valve and allow free flow.

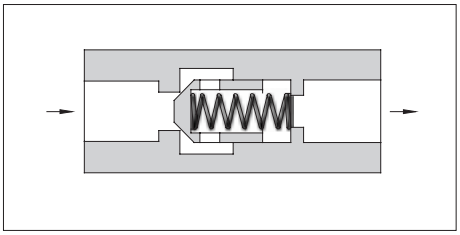

Graphic Symbol

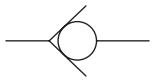

Specifications

Model Numbers	Rated Flow★ L/min (U.S.GPM)	Max. Operating Pres. MPa (PSI)	Cracking Pres. MPa (PSI)	Approx. Mass kg (lbs.)
CIT-02-∗-50/5080/5090	16 (4.23)	25 (3630)	0.04 (6) 0.35 (50) 0.5 (70)	0.1 (.22)
CIT-03-∗-50/5080/5090	30 (7.93)			0.3 (.66)
CIT-06-∗-50/5080/5090	85 (22.5)			0.8 (1.8)
CIT-10-∗-50/5080/5090	230 (60.8)			2.3 (5.1)

★Rated flow is the approximate flow rate, when there is a free flow pressure drop of maximum 0.3 MPa (44 PSI), the fluid has a specific gravity of 0.85 and a kinematic viscosity of 20 mm^2/s (98 SSU), and the cracking pressure is 0.04 MPa (6 PSI).

Model Number Designation

CI	T	-03	-04	-50	∗
Series Number	Type of Connection	Valve Size	Cracking Pressure MPa (PSI)	Design Number	Design Standards
CI: In-Line Check Valve	**T**: Threaded Connection	**02**	**04**: 0.04 (6) **35**: 0.35 (50) **50**: 0.5 (70)	**50**	**None**: Japanese Std. "JIS" **80**: European Design Std. **90**: N. American Design Std.
		03		**50**	
		06		**50**	
		10		**50**	

Note: For In-Line Check Valves, standard type (for petroleum base oils) can be used phosphate ester type fluid.

CIT-02-∗-50/5080/5090
CIT-03-∗-50/5080/5090
CIT-06-∗-50/5080/5090
CIT-10-∗-50/5080/5090

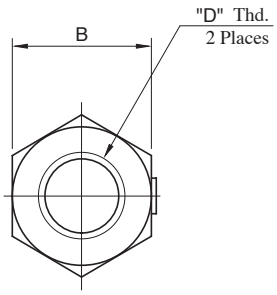

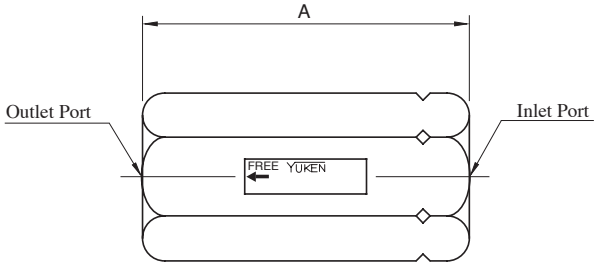

Model Numbers	mm (Inches) A	mm (Inches) B	"D" Thd.
CIT-02-∗-50	58 (2.28)	19 (.75)	Rc 1/4
CIT-02-∗-5080	65 (2.56)	22 (.87)	1/4 BSP.F
CIT-02-∗-5090	58 (2.28)	19 (.75)	1/4 NPT
CIT-03-∗-50	76 (2.99)	27 (1.06)	Rc 3/8
CIT-03-∗-5080	83 (3.27)		3/8 BSP.F
CIT-03-∗-5090	76 (2.99)		3/8 NPT
CIT-06-∗-50	95 (3.74)	41 (1.61)	Rc 3/4
CIT-06-∗-5080	102(4.02)		3/4 BSP.F
CIT-06-∗-5090	95 (3.74)		3/4 NPT
CIT-10-∗-50	133(5.24)	60 (2.36)	Rc 1-1/4
CIT-10-∗-5080			1-1/4 BSP.F
CIT-10-∗-5090			1-1/4 NPT

DIMENSIONS IN MILLIMETRES (INCHES)

Pressure Drop

Hydraulic Fluid: Viscosity 30 mm²/s (141 SSU), Specific Gravity 0.850

CIT-02

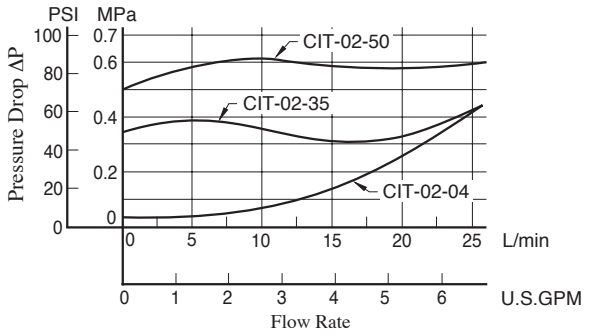

CIT-03

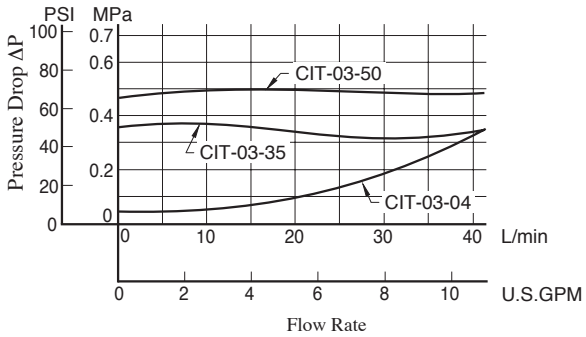

CIT-06

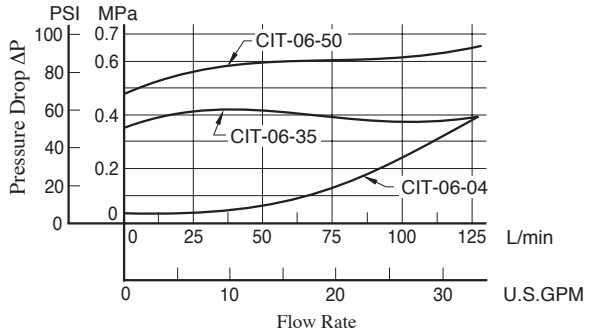

CIT-10

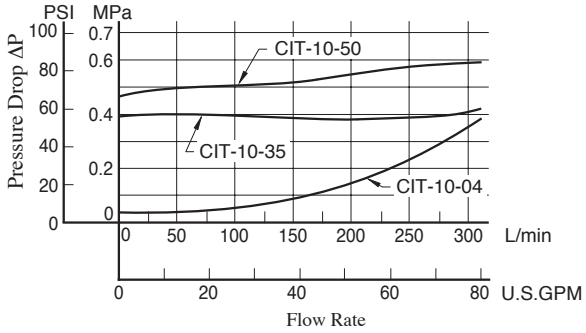

Right Angle Check Valves

These valves allow free flow in one direction and prevent flow in the reverse direction. Cracking pressure specified is the pressure required to open the valve and allow free flow.

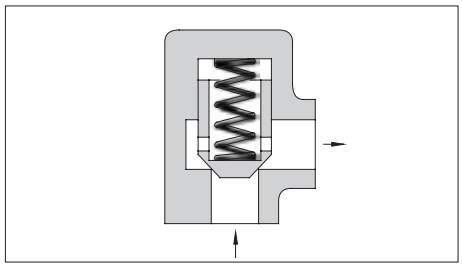

Graphic Symbol

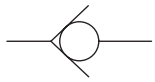

Specifications

Type of Connection	Model Numbers	Rated Flow★ L/min (U.S.GPM)	Max. Operating Pres. MPa (PSI)	Cracking Pres. MPa (PSI)	Approx. Mass kg (lbs.)
Threaded Connection	CRT-03-∗-50/5080/5090	40 (10.6)	25 (3630)	0.04 (6)	0.9 (2.0)
	CRT-06-∗-50/5080/5090	125 (33)		0.35 (50)	1.7 (3.7)
	CRT-10-∗-50/5080/5090	250 (66)		0.5 (70)	5.6 (12.3)
Sub-plate Mounting	CRG-03-∗-50/5090	40 (10.6)	25 (3630)	0.04 (6)	1.7 (3.7)
	CRG-06-∗-50/5090	125 (33)		0.35 (50)	2.9 (6.4)
	CRG-10-∗-50/5090	250 (66)		0.5 (70)	5.5 (12.1)

★Rated flow is the approximate flow rate, when there is a free flow pressure drop of maximum 0.3 MPa (44 PSI), the fluid has a specific gravity of 0.85 and a kinematic viscosity of 20 mm^2/s (98 SSU), and the cracking pressure is 0.04 MPa (6 PSI).

Model Number Designation

F-	CR	T	-03	-04	-50	∗
Special Seals	Series Number	Type of Connection	Valve Size	Cracking Pressure MPa (PSI)	Design Number	Design Standards
F: Special seals for phosphate ester type fluids (Omit if not required)	**CR**: Right Angle Check Valve	**T**: Threaded Connection	**03**	**04**: 0.04 (6)	**50**	**None**: Japanese Std. "JIS" **80**: European Design Std. **90**: N. American Design Std.
			06	**35**: 0.35 (50)	**50**	
			10	**50**: 0.5 (70)	**50**	
		G: Sub-plate Mounting	**03**	**04**: 0.04 (6)	**50**	**None**: Japanese Std. "JIS" & European Design Std. **90**: N. American Design Std.
			06	**35**: 0.35 (50)	**50**	
			10	**50**: 0.5 (70)	**50**	

Sub-plate

Valve Model Numbers	Japanese Standard "JIS"		European Design Standard		N.American Design Standard		Approx. Mass kg (lbs.)
	Sub-plate Model Numbers	Thread Size	Sub-plate Model Numbers	Thread Size	Sub-plate Model Numbers	Thread Size	
CRG-03	CRGM-03-50	Rc 3/8	CRGM-03-5080	3/8 BSP.F	CRGM-03-5090	3/8 NPT	1.6 (3.5)
	CRGM-03X-50	Rc 1/2	CRGM-03X-5080	1/2 BSP.F	CRGM-03X-5090	1/2 NPT	1.6 (3.5)
CRG-06	CRGM-06-50	Rc 3/4	CRGM-06-5080	3/4 BSP.F	CRGM-06-5090	3/4 NPT	2.4 (5.3)
	CRGM-06X-50	Rc 1	CRGM-06X-5080	1 BSP.F	CRGM-06X-5090	1 NPT	3.0 (6.6)
CRG-10	CRGM-10-50	Rc 1-1/4	CRGM-10-5080	1-1/4 BSP.F	CRGM-10-5090	1-1/4 NPT	4.8 (10.6)
	CRGM-10X-50	Rc 1-1/2	CRGM-10X-5080	1-1/2 BSP.F	CRGM-10X-5090	1-1/2 NPT	5.7 (12.6)

●Sub-plates are available. Specify the sub-plate model number from the table above. When sub-plates are not used, the mounting surface should have a good machined finish.

Yuken can offer flanged connection valves described below.
For details, contact us.

Model No.	Rated Flow L/min (U.S.GPM)	Max. Operating Pressure MPa (PSI)
CRF-10-∗-50∗	300 (79.3)	25 (3630)
CRF-16-∗-50∗	600 (159)	
CRF-24-∗-50∗	1300 (343)	

Mounting Bolts

Socket head cap screws in the table below are included.

Valve Model Numbers	Socket Head Cap Screw		Qty.
	Japanese Standard "JIS" European Design Standard	N.American Design Standard	
CRG-03	M10 × 45 Lg.	3/8-16 UNC × 1-3/4 Lg.	4
CRG-06	M10 × 50 Lg.	3/8-16 UNC × 2 Lg.	4
CRG-10	M10 × 55 Lg.	3/8-16 UNC × 2-1/4 Lg.	6

DIMENSIONS IN MILLIMETRES (INCHES)

CRT-03-∗-50/5080/5090
CRT-06-∗-50/5080/5090
CRT-10-∗-50/5080/5090

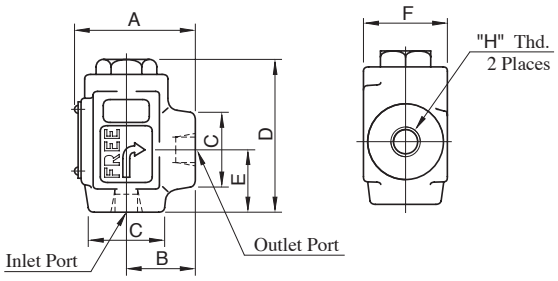

Model Numbers	Dimensions mm (Inches)						"H" Thd.
	A	B	C	D	E	F	
CRT-03-∗-50	62 (2.44)	36 (1.42)	38 (1.50) Dia	80.5 (3.17)	33 (1.30)	44 (1.73)	Rc 3/8
CRT-03-∗-5080							3/8 BSP.F
CRT-03-∗-5090							3/8 NPT
CRT-06-∗-50	74 (2.91)	45 (1.77)	54 (2.13) Dia.	104.5 (4.11)	49 (1.93)	54 (2.13)	Rc 3/4
CRT-06-∗-5080							3/4 BSP.F
CRT-06-∗-5090							3/4 NPT
CRT-10-∗-50	107 (4.21)	65 (2.56)	80 (3.15) SQ.	130 (5.12)	65 (2.56)	80 (3.15)	Rc 1-1/4
CRT-10-∗-5080							1-1/4 BSP.F
CRT-10-∗-5090							1-1/4 NPT

CRG-03-∗-50/5090
CRG-06-∗-50/5090

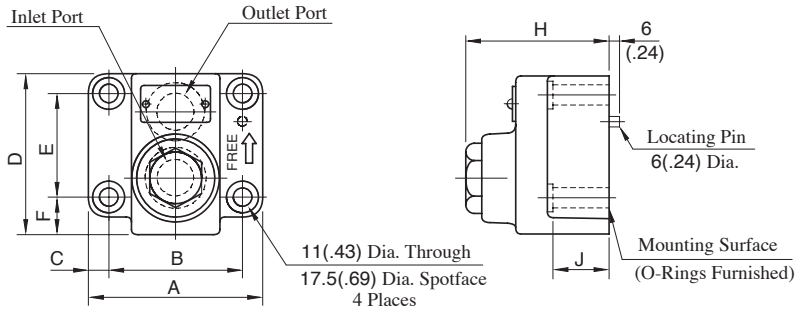

Model Numbers	Dimensions mm (Inches)								Mounting Surface
	A	B	C	D	E	F	H	J	
CRG-03	90 (3.54)	66.7 (2.63)	11.7 (.46)	72 (2.83)	42.9 (1.69)	17.5 (.69)	72.5 (2.85)	30 (1.18)	ISO 5781-AG-06-2-A
CRG-06	102 (4.02)	79.4 (3.13)	11.3 (.44)	93 (3.66)	60.3 (2.37)	21.4 (.84)	84.5 (3.33)	35 (1.38)	ISO 5781-AH-08-2-A

CRG-10-∗-50/5090

Mounting surface: ISO 5781-AJ-10-2-A

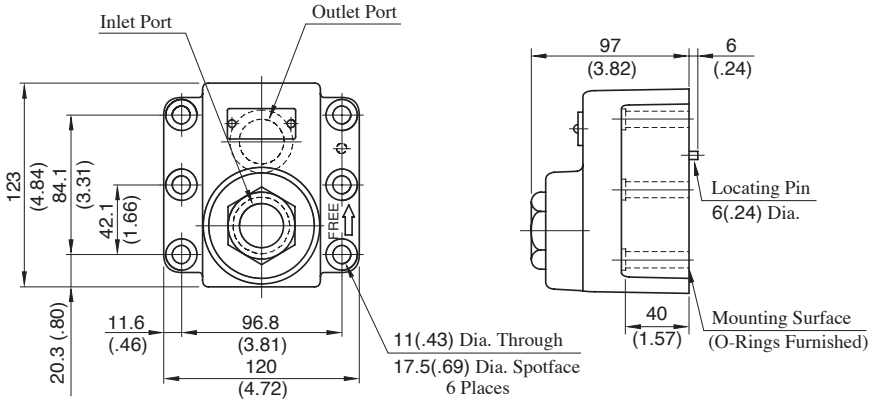

Sub-plate

CRGM-03-50/5080/5090
CRGM-03X-50/5080/5090

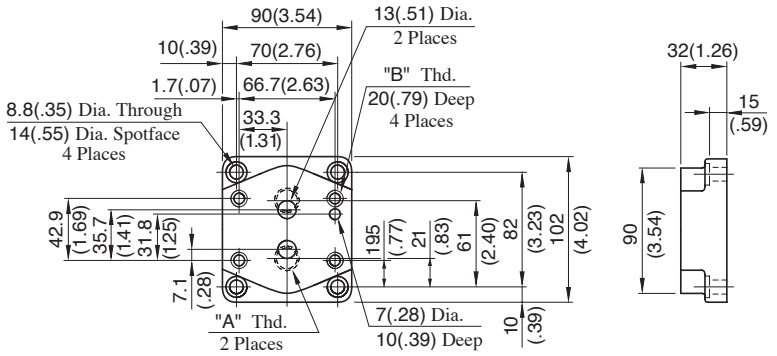

Sub-plate Model Numbers	Thread Size	
	"A" Thd.	**"B"** Thd.
CRGM-03-50	Rc 3/8	M10
CRGM-03-5080	3/8 BSP.F	
CRGM-03-5090	3/8 NPT	3/8-16 UNC
CRGM-03X-50	Rc 1/2	M10
CRGM-03X-5080	1/2 BSP.F	
CRGM-03X-5090	1/2 NPT	3/8-16 UNC

DIMENSIONS IN MILLIMETRES (INCHES)

CRGM-06-50/5080/5090
CRGM-06X-50/5080/5090

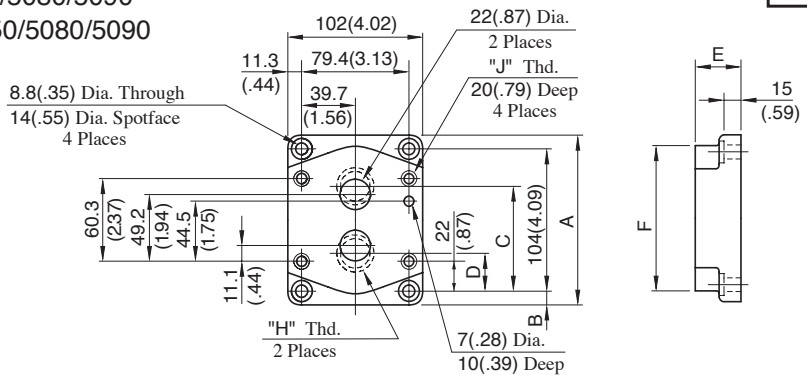

Sub-plate Model Numbers	Dimensions mm (Inches)						Thread Size	
	A	**B**	**C**	**D**	**E**	**F**	**"H"** Thd.	**"J"** Thd.
CRGM-06-50	124 (4.88)	10 (.39)	77 (3.03)	27 (1.06)	36 (1.42)	110 (4.33)	Rc 3/4	M10
CRGM-06-5080							3/4 BSP.F	
CRGM-06-5090							3/4 NPT	3/8-16 UNC
CRGM-06X-50	136 (5.35)	16 (.63)	82.3 (3.24)	22 (.87)	45 (1.77)	130 (5.12)	Rc 1	M10
CRGM-06X-5080			80 (3.15)	24 (.94)			1 BSP.F	
CRGM-06X-5090			82.3 (3.24)	22 (.87)			1 NPT	3/8-16 UNC

CRGM-10-50/5080/5090
CRGM-10X-50/5080/5090

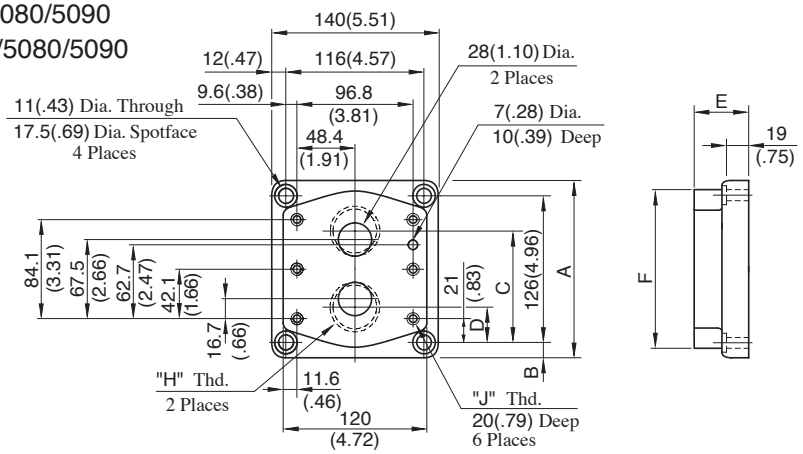

Sub-plate Model Numbers	Dimensions mm (Inches)						Thread Size	
	A	**B**	**C**	**D**	**E**	**F**	**"H"** Thd.	**"J"** Thd.
CRGM-10-50	150 (5.91)	12 (.47)	96 (3.78)	30 (1.18)	45 (1.77)	135 (5.31)	Rc 1-1/4	M10
CRGM-10-5080							1-1/4 BSP.F	
CRGM-10-5090							1-1/4 NPT	3/8-16 UNC
CRGM-10X-50	177 (6.97)	25.5 (1.00)	104 (4.09)	22 (.87)	50 (1.97)	167 (6.57)	Rc 1-1/2	M10
CRGM-10X-5080							1-1/2 BSP.F	
CRGM-10X-5090							1-1/2 NPT	3/8-16 UNC

Pressure Drop

Hydraulic Fluid: Viscosity 30mm²/s (141 SSU), Specific Gravity 0.850

CRT-03

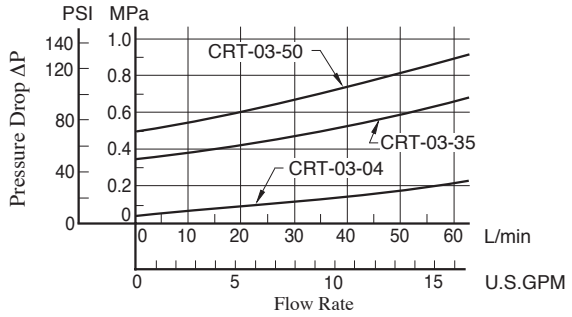

CRG-03

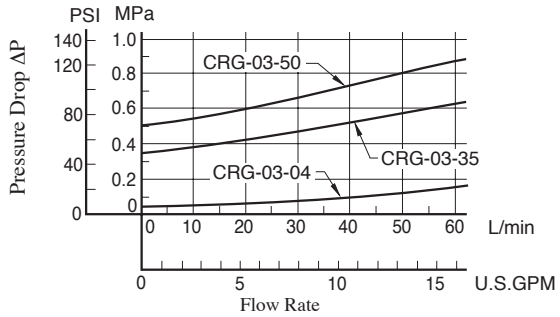

CRT-06

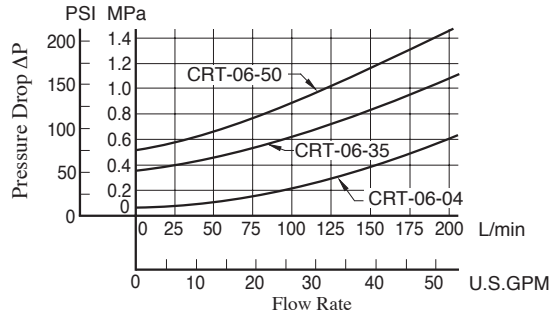

CRG-06

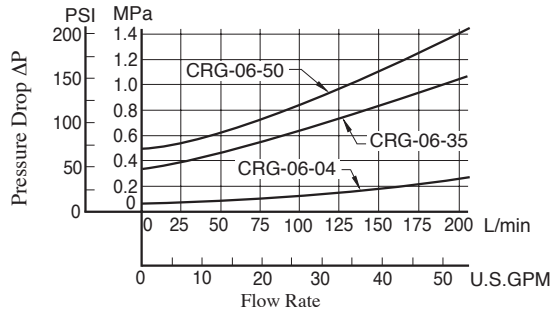

CRT-10

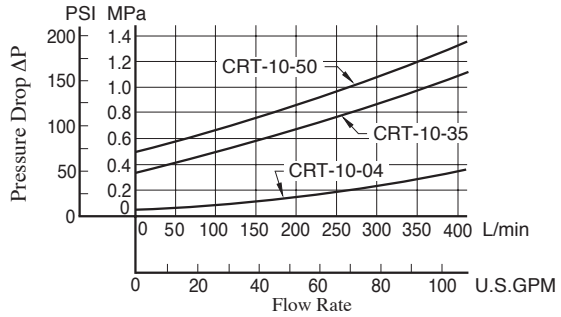

CRG-10

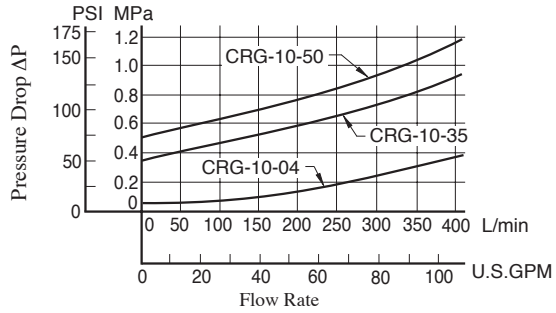

List of Seals

CRT-03-50/5080/5090
CRT-06-50/5080/5090
CRT-10-50/5080/5090

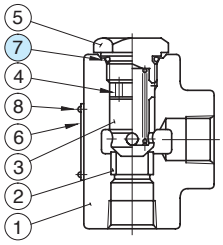

List of Seals & Seal Kits

Item	Name of Parts	Part Numbers			Qty.
		CRT-03	CRT-06	CRT-10	
7	O-Ring	SO-NB-P21	SO-NB-P24	SO-NB-P32	1
★	Seal Kit	KS-CRT-03-50	KS-CRT-06-50	KS-CRT-10-50	—

★ When ordering the O-Rings, please specify the seal kit number from the table above.

CRG-03-50/5090
CRG-06-50/5090
CRG-10-50/5090

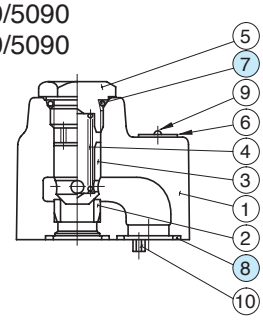

List of Seals & Seal Kits

Item	Name of Parts	Part Numbers			Qty.
		CRG-03	CRG-06	CRG-10	
7	O-Ring	SO-NB-P21	SO-NB-P24	SO-NB-P32	1
8	O-Ring	SO-NB-P18	SO-NB-P28	SO-NB-P32	2
★	Seal Kit	KS-CRG-03-50	KS-CRG-06-50	KS-CRG-10-50	—

★ When ordering the O-Rings, please specify the seal kit number from the table above.

Pilot Operated Check Valves

These check valves allow flow in one direction and prevent flow in the reverse direction, until operated by pilot pressure to allow free reverse flow. The specified cracking pressure is required to open the valve to allow free flow direction.

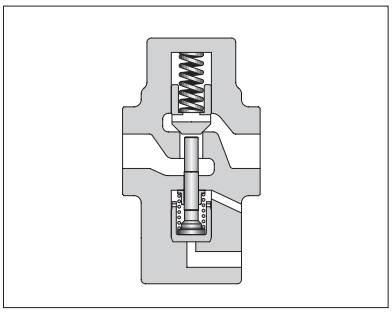

Graphic Symbols

Internal Drain Type External Drain Type

Specifications

Type of Connection	Model Numbers	Rated Flow★ L/min (U.S.GPM)	Max. Operating Pres. MPa (PSI)	Cracking Pres. MPa (PSI)	Approx. Mass kg (lbs.)
Threaded Connection	CPT/CPDT-03-∗-∗-50∗	40 (10.6)	25 (3630)	0.04 (6) 0.2 (29) 0.35 (50) 0.5 (70)	3.0 (6.6)
	CPT/CPDT-06-∗-∗-50∗	125 (33)			5.5 (12.1)
	CPT/CPDT-10-∗-∗-50∗	250 (66)			9.6 (21.2)
Sub-plate Mounting	CPG/CPDG-03-∗-∗-50∗	40 (10.6)	25 (3630)	0.04 (6) 0.2 (29) 0.35 (50) 0.5 (70)	3.3 (7.3)
	CPG/CPDG-06-∗-∗-50∗	125 (33)			5.4 (11.9)
	CPG/CPDG-10-∗-∗-50∗	250 (66)			8.5 (18.7)

★Rated flow is the approximate flow rate, when there is a free flow pressure drop of maximum 0.3 MPa (44 PSI), the fluid has a specific gravity of 0.85 and a kinematic viscosity of 20 mm^2/s (98 SSU), and the cracking pressure is 0.04 MPa (6 PSI).

Model Number Designatioin

F-	CP	T	03	-E	-04	-50	∗
Special Seals	Series Number	Type of Connection	Valve Size	Drain Connection	Cracking Pres. MPa (PSI)	Design Number	Design Standards
F: Special Seals for Phosphate Ester Type Fluids (Omit if not required)	**CP**: Pilot Operated Check Valve **CPD**: Decompression Type Pilot Operated Check Valve	**T**: Threaded Connection	**03**	**None**: Internal Drain **E**: External Drain	**04**:0.04 (6) **20**:0.2 (29) **35**:0.35 (50) **50**:0.5 (70)	**50**	**None**: Japanese Std. "JIS" **80**: European Design Std. **90**: N. American Design Std.
			06			**50**	
			10			**50**	
		G: Sub-plate Mounting	**03**			**50**	**None**: Japanese Std. "JIS" & European Design Std. **90**: N. American Design Std.
			06			**50**	
			10			**50**	

Mounting Bolts

Socket head cap screws in the table below are included.

Valve Model Numbers	Socket Head Cap Screw		Qty.
	Japanese Standard "JIS" & European Design Standard	N.American Design Standard	
CP∗G-03	M10 × 45 Lg.	3/8-16 UNC × 1-3/4 Lg.	4
CP∗G-06	M10 × 50 Lg.	3/8-16 UNC × 2 Lg.	4
CP∗G-10	M10 × 55 Lg.	3/8-16 UNC × 2-1/4 Lg.	6

Yuken can offer flanged connection valves described below.
For details, contact us.

Model Numbers	Rated Flow L/min (U.S.GPM)	Max. Operating Pressure MPa (PSI)
CP∗F-10-∗-∗-50∗	250 (66)	25 (3630)
CP∗F-16-∗-∗-50∗	600 (159)	25 (3630)

Sub-plate

Valve Model Numbers	Japanese Standard "JIS"		European Design Standard		N. American Design Standard		Approx. Mass kg (lbs.)
	Sub-plate Model Numbers	Thread Size	Sub-plate Model Numbers	Thread Size	Sub-plate Model Numbers	Thread Size	
CP∗G-03	HGM-03-20	Rc 3/8	HGM-03-2080	3/8 BSP.F	HGM-03-2090	3/8 NPT	1.6 (3.5)
	HGM-03X-20	Rc1/2	HGM-03X-2080	1/2 BSP.F	HGM-03X-2090	1/2 NPT	1.6 (3.5)
CP∗G-06	HGM-06-20	Rc 3/4	HGM-06-2080	3/4 BSP.F	HGM-06-2090	3/4 NPT	2.4 (5.3)
	HGM-06X-20	Rc 1	HGM-06X-2080	1 BSP.F	HGM-06X-2090	1 NPT	3.0 (6.6)
CP∗G-10	HGM-10-20	Rc 1-1/4	HGM-10-2080	1-1/4 BSP.F	HGM-10-2090	1-1/4 NPT	4.8 (10.6)
	HGM-10X-20	Rc 1-1/2	HGM-10X-2080	1-1/2 BSP.F	HGM-10X-2090	1-1/2 NPT	5.7 (12.6)

- Sub-plates are available, specify the sub-plate model number from the table above. When sub-plates are not used, the mountingsurface should have a good machined finish.
- Sub-plates are shared with those for H Type Pressure Control Valves. Refer to pages 244 to 246 for dimensions.

Instructions

- **Operation of internal and external drain types**

  When the outlet side P1 is directly connected to the tank in reversed free flow (Fig. a), the internal drain type is normally used. When the back pressure is applied to the outlet side P_1 (Fig. b), be sure to use the external drain type.

- **Minimum pilot pressure characteristics**

  That depends on the pressure of the inlet side P_2 in the reversed free flow.
  This value can be determined from the characteristics chart.

- **Cautionson replacementof 20 design low crackingpressure type valves with 50 design valves.**

  In 20 design valve with cracking pressure of 0.035 MPa (5 PSI) (Code "5"), for closing the valve completely and certainly, it was necessary to introduce the pressurized oil into the drain port to push down the piston compulsory.
  While in 50 design valve with cracking pressure of 0.04 MPa (6 PSI) (Code "6"), it has such structure that the valve can be closed completely and certainly without introducing the pressurized oil into the drain port. On the contrary, what is worse is that if the pressurized oil is introduced into the drain port, the oil acts towards the direction of opening the valve, which is very dangerous and has to be absolutely avoided. Therefore, please do not supply any pressurized oil into the drain port in case of using 50 design valve.

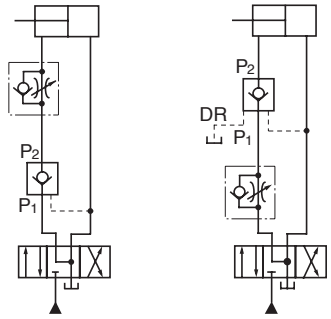

(Fig.a) (Fig.b)

WARNING

The machinery, if misused due to failure to observe the "Cautions" on the left, may perform unforeseeable movements, resulting in a disastrous accident.

CPT/CPDT-03-∗-∗-50/5080/5090
CPT/CPDT-06-∗-∗-50/5080/5090
CPT/CPDT-10-∗-∗-50/5080/5090

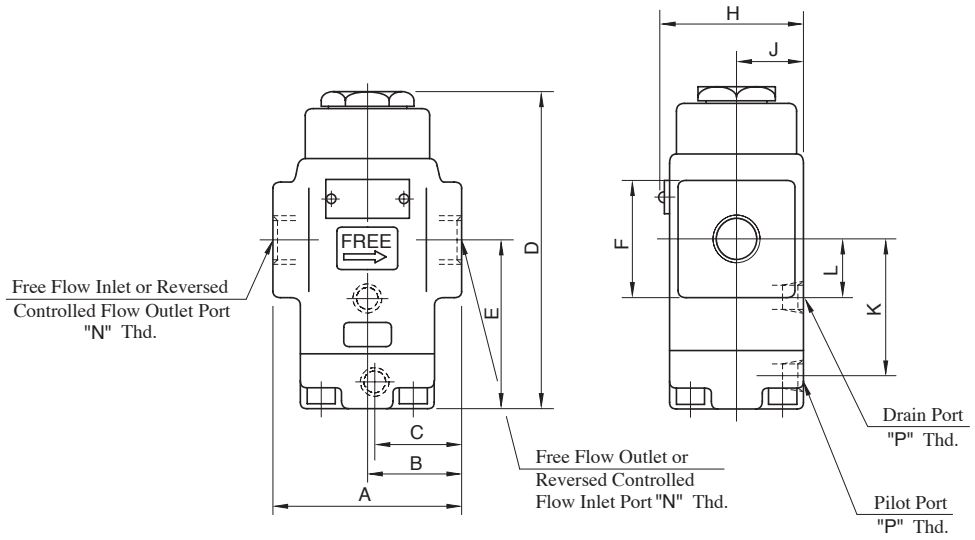

Model Numbers	Dimensions mm (Inches)										Thread Size	
	A	B	C	D	E	F	H	J	K	L	"N" Thd.	"P" Thd.
CPT/CPDT-03-∗-∗-50	80 (3.15)	40 (1.57)	39 (1.54)	150.5 (5.93)	84.5 (3.33)	38 (1.50) Dia.	60 (2.36)	29 (1.14)	67.5 (2.66)	26.5 (1.04)	Rc 3/8	Rc 1/4
CPT/CPDT-03-∗-∗-5080											3/8 BSP.F	1/4 BSP.F
CPT/CPDT-03-∗-∗-5090											3/8 NPT	1/4 NPT
CPT/CPDT-06-∗-∗-50	96 (3.78)	48 (1.89)	47 (1.85)	171.5 (6.75)	92.5 (3.64)	62 (2.44) SQ.	72 (2.83)	35 (1.38)	75.5 (2.97)	31 (1.22)	Rc 3/4	Rc 1/4
CPT/CPDT-06-∗-∗-5080											3/4 BSP.F	1/4 BSP.F
CPT/CPDT-06-∗-∗-5090											3/4 NPT	1/4 NPT
CPT/CPDT-10-∗-∗-50	140 (5.51)	70 (2.76)	64 (2.52)	203.5 (8.01)	113 (4.45)	80 (3.15) SQ.	82 (3.23)	40 (1.57)	96 (3.78)	43 (1.69)	Rc 1-1/4	Rc 1/4
CPT/CPDT-10-∗-∗-5080											1-1/4 BSP.F	1/4 BSP.F
CPT/CPDT-10-∗-∗-5090											1-1/4 NPT	1/4NPT

CPG/CPDG-03-∗-∗-50/5090
CPG/CPDG-06-∗-∗-50/5090

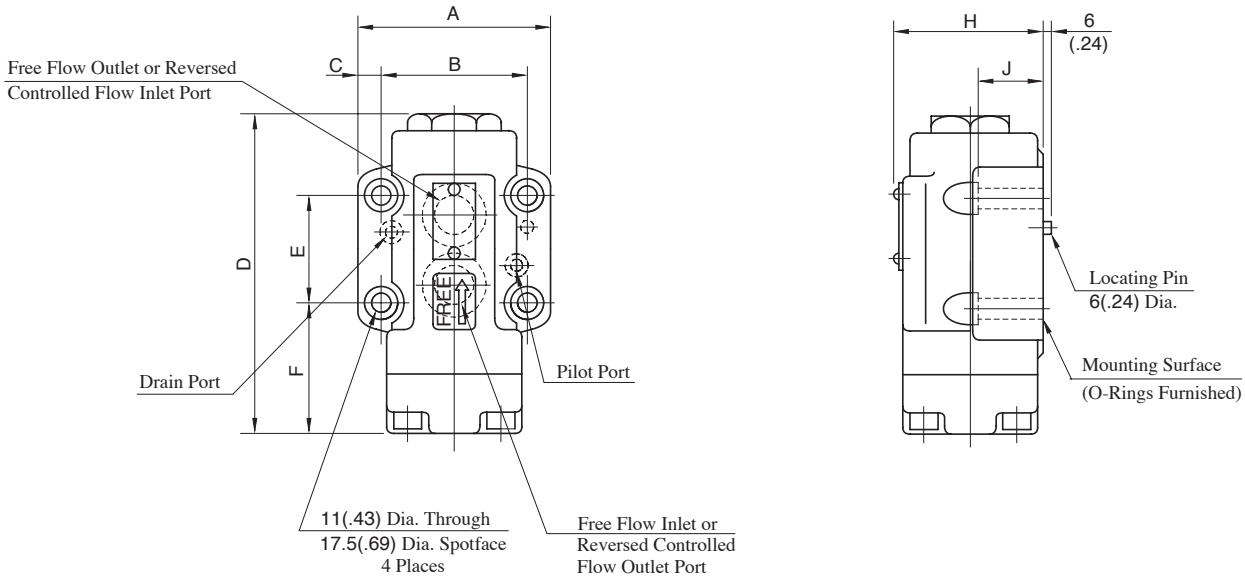

Model Numbers	Dimensions mm (Inches)								Mounting Surface
	A	B	C	D	E	F	H	J	
CPG/CPDG-03-∗-∗-50/5090	90 (3.54)	66.7 (2.63)	11.7 (.46)	150.5 (5.93)	42.9 (1.69)	66 (2.60)	62 (2.44)	30 (1.18)	ISO 5781-AG-06-2-A
CPG/CPDG-06-∗-∗-50/5090	102 (4.02)	79.4 (3.13)	11.3 (.44)	171.5 (6.75)	60.3 (2.37)	67.5 (2.66)	74 (2.91)	35 (1.38)	ISO 5781-AH-08-2-A

CPG/CPDG-10-∗-∗-50/5090

Mounting surface: ISO 5781-AJ-10-2-A

DIMENSIONS IN MILLIMETRES (INCHES)

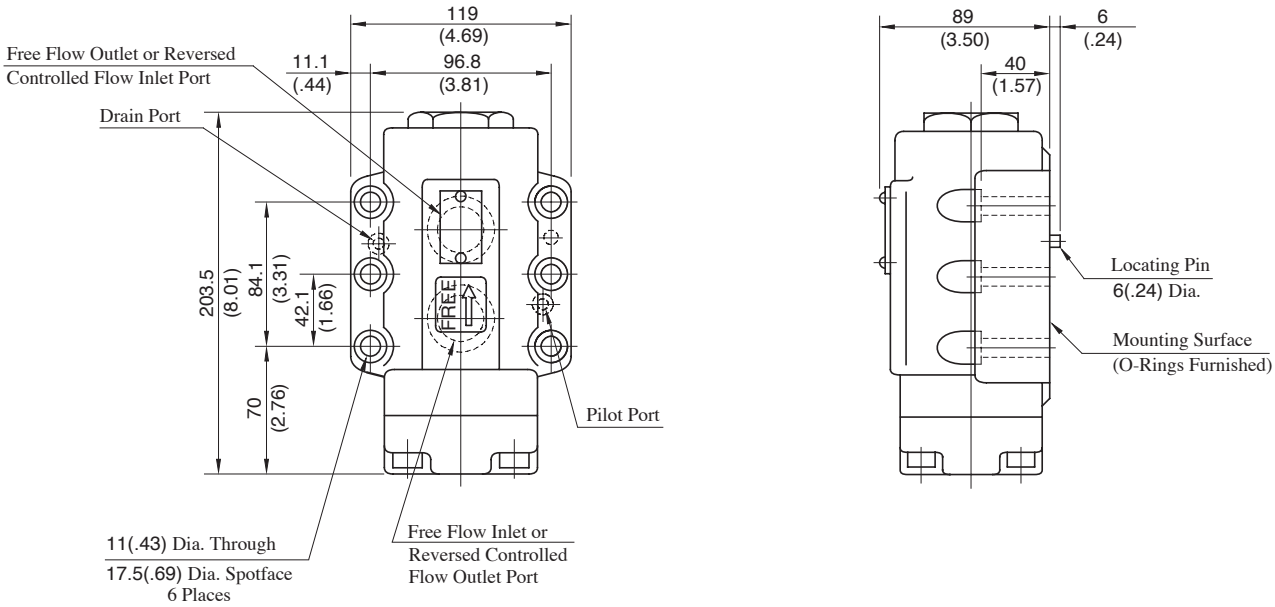

Hydraulic Fluid: Viscosity 30 mm²/s (141 SSU), Specific Gravity 0.850

Pressure Drop

● CPT-03, CPDT-03

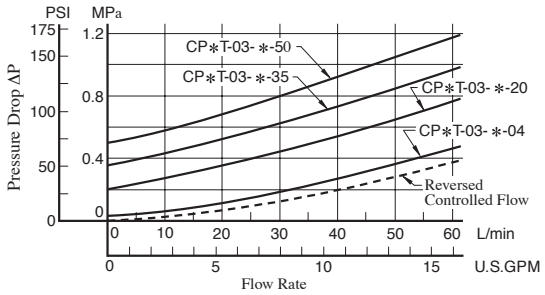

● CPG-03, CPDG-03

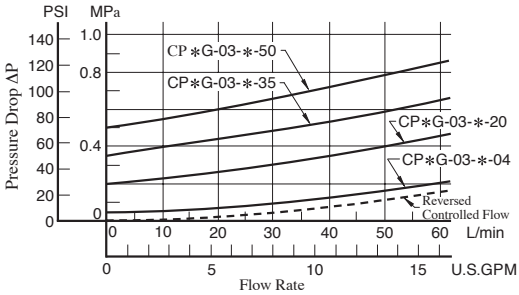

● CPT-06, CPDT-06

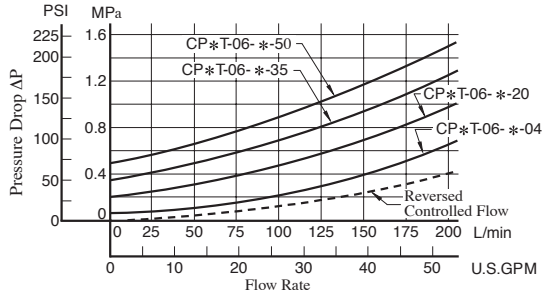

● CPG-06, CPDG-06

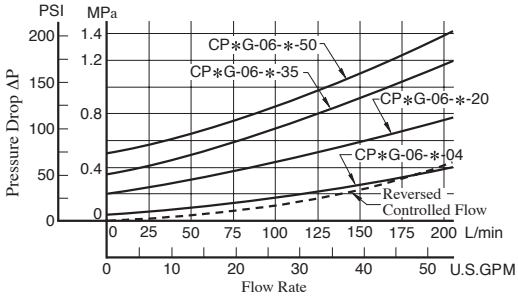

● CPT-10, CPDT-10

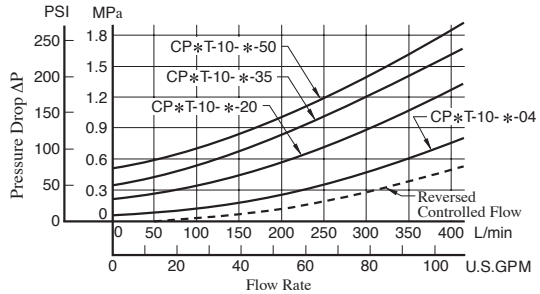

● CPG-10, CPDG-10

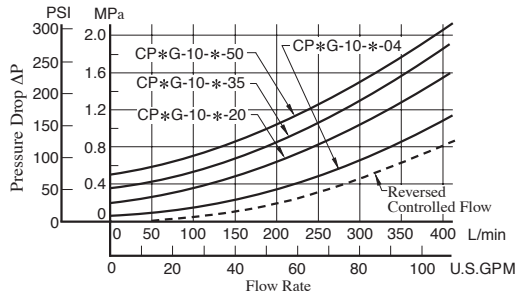

Min. Pilot Pressure Chart

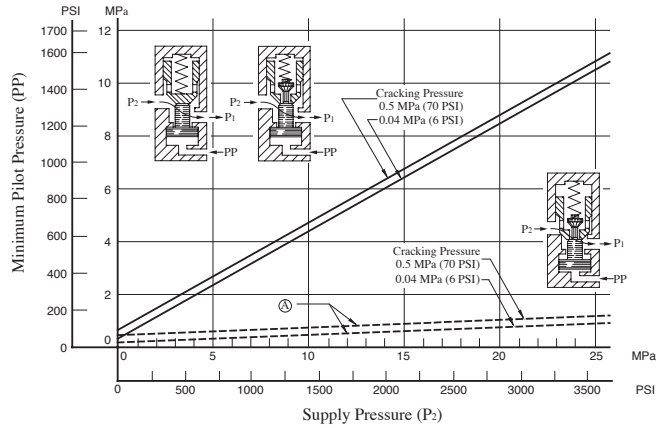

Ⓐ : Min. Pilot Pressure to open the Decompression Valve

Pressure Drop for Reversed Controlled Flow Only when Decompression Valve is Opened

● CPDT-03, CPDG-03

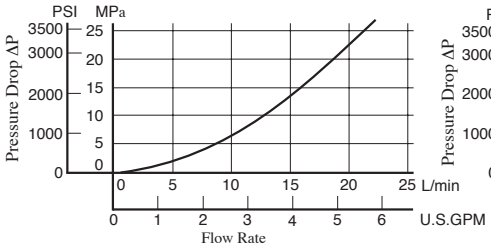

● CPDT-06, CPDG-06

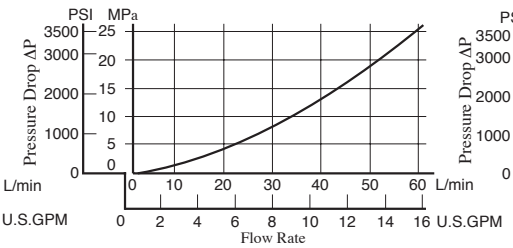

● CPDT-10, CPDG-10

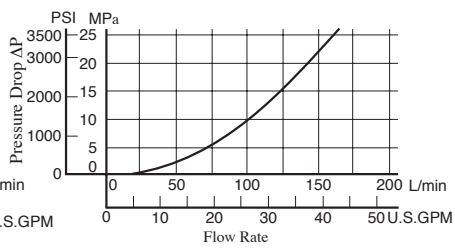

List of Seals

CPT/CPDT-03-∗-∗-50/5080/5090
CPT/CPDT-06-∗-∗-50/5080/5090
CPT/CPDT-10-∗-∗-50/5080/5090

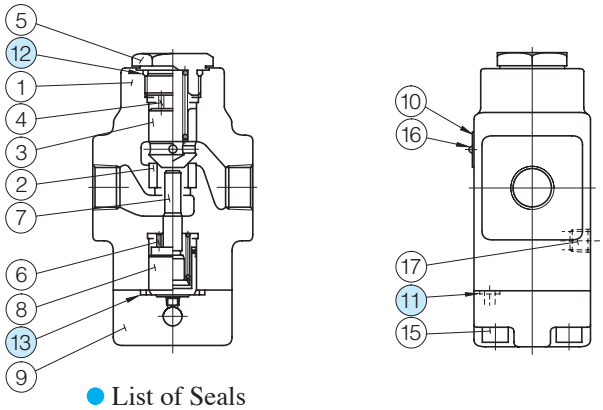

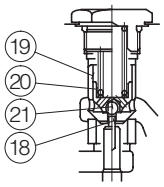

CPDT-03/06/10

List of Seals

Item	Name of Parts	Part Numbers			Qty.
		CPT/CPDT-03	CPT/CPDT-06	CPT/CPDT-10	
11	O-Ring	SO-NB-P7	SO-NB-P9	SO-NB-P9	1
12	O-Ring	SO-NB-P21	SO-NB-P29	SO-NB-P36	1
13	O-Ring	SO-NB-G25	SO-NB-P32	SO-NB-P42	1

Note: When ordering the seals, please specify the seal kit number from the table below.

CPG/CPDG-03-∗-∗-50/5090
CPG/CPDG-06-∗-∗-50/5090
CPG/CPDG-10-∗-∗-50/5090

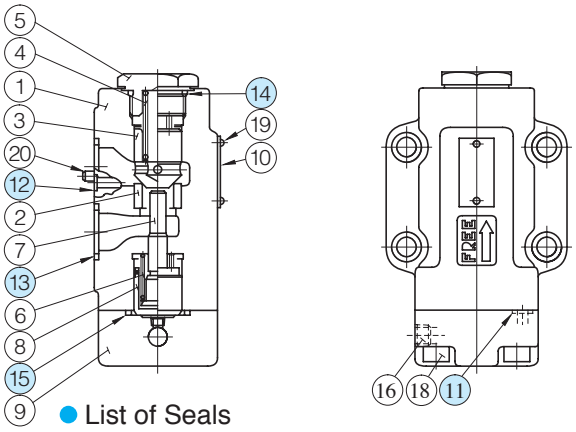

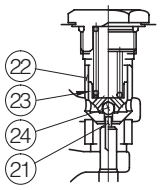

CPDG-03/06/10

List of Seals

Item	Name of Parts	Part Numbers			Qty.
		CPG/CPDG-03	CPG/CPDG-06	CPG/CPDG-10	
11	O-Ring	SO-NB-P7	SO-NB-P9	SO-NB-P9	1
12	O-Ring	SO-NB-P9	SO-NB-P9	SO-NB-P9	2
13	O-Ring	SO-NB-P18	SO-NB-P28	SO-NB-P32	2
14	O-Ring	SO-NB-P21	SO-NB-P29	SO-NB-P36	1
15	O-Ring	SO-NB-G25	SO-NB-P32	SO-NB-P42	1

Note: When ordering the O-Rings, please specify the seal kit number from the table below.

List of Seal Kits

Model Numbers	Seal Kit Numbers
CPT/CPDT-03-∗-∗-50/5080/5090	KS-CPT-03-50
CPT/CPDT-06-∗-∗-50/5080/5090	KS-CPT-06-50
CPT/CPDT-10-∗-∗-50/5080/5090	KS-CPT-10-50
CPG/CPDG-03-∗-∗-50/5090	KS-CPG-03-50
CPG/CPDG-06-∗-∗-50/5090	KS-CPG-06-50
CPG/CPDG-10-∗-∗-50/5090	KS-CPG-10-50

F

MODULES

YUKEN's Modular Valves are stack type valves, and require no piping. They not only rationalise system build, but they also meet the technical requirements for a variety of hydraulic systems. Stacking systems is a new era in hydraulics.
The valves have standardized mounting surface conforming to ISO 4401 and optimum thickness for each size. Any hydraulic circuits can be easily composed by stacking the valves with mounting bolts. The valves can be used widely for hydraulic systems for various industries such as machine tools, special purpose machines, ships and steel mill equipment.

Valve Type	Max. Operating Pressure MPa (PSI)	Maximum Flow (U.S.GPM / L/min)	Page
005 Series Modular Valves	25 (3630)	005	517
01 Series Modular Valves	31.5 (4570)	01 / 01★	535
03 Series Modular Valves	25 (3630)	03 / 03★	577
06 Series Modular Valves	25 (3630)	06	619
10 Series Modular Valves	25 (3630)	10	633

★Maximum Flow for Throttle and Check Modular Valves.

Hydraulic Fluids

Fluid Types

Any type of hydraulic fluid listed in the table below can be used.

Petroleum Base Oils	Use fluids equivalent to ISO VG 32 or VG 46.
Synthetic Fluids	Use phosphate ester or polyol ester fluids. When phosphate ester fluid is used, prefix "F-" to the model number because the special seals (fluororubber) are required to be used.
Water-containing Fluids	Use water-glycol fluid.

Note: For use with hydraulic fluids other than those listed above, please consult your Yuken representatives in advance.

Recommended Fluid Viscosity and Temperature

Use hydraulic fluids which satisfy the both recommended viscosity and oil temperatures given in the table below.

Name	Viscosity	Temperature
005 Series Modular Valves	15 - 200 mm^2/s (77 - 900 SSU)	-15 - +60˚C (5 - 140˚F)
01 Series Modular Valves 03 Series Modular Valves 06 Series Modular Valves 10 Series Modular Valves	15 - 400 mm^2/s (77 - 1800 SSU)	-15 - +70˚C (5 - 160˚F)

Control of Contamination

Due caution must be paid to maintaining control over contamination of the hydraulic fluids which may otherwise lead to breakdowns and shorten the life of the valve.

Name	Contamination	Nominal Filtration
005 Series Modular Valves	Within NAS1638 - Grade 11	20 μm or less
01 Series Modular Valves 03 Series Modular Valves 06 Series Modular Valves 10 Series Modular Valves	Within NAS1638 - Grade 12	20 μm or less

High Pressure, High Flow Rate Modular Valves

Features

1. Installation and mounting space can be minimized.
2. No special skill is required for assembly and any addition or alteration of the hydraulic circuit can be made quickly and easily.
3. Problems such as oil-leaks, vibration and noise which may be caused by piping are minimized, increasing the reliability of the hydraulic system.
4. Maintenance and system check-ups can be easily carried out as they are normally installed in stackable units.

Specifications

Series	Valve Size	Max. Operating Pressure MPa (PSI)	Max. Flow L/min (U.S.GPM)	Number of Stack ★2
005 Series	—	25 (3630)	15 (3.96)	1 to 4 stackes
01 Series	1/8	31.5 (4570)	35 [60] ★1 (9.24 [15.9]) ★1	1 to 5 stackes ★3
03 Series	3/8	25 [31.5] ★4 (3630 [4570]) ★4	70 [120] ★1 (18.5 [31.7]) ★1	1 to 5 stackes
06 Series	3/4	25 (3630)	500 (132)	
10 Series	1-1/4	25 (3630)	800 (211)	

★1. The values in parentheses represent the max. flow rates for throttle modular valves (MSP) and throttle check modular valves (MSA/MSB/MSW).
★2. Solenoid operated directional valve is included in the number of stack.
★3. Solenoid operated directional valve is included in the number of stack. If the working pressure is above 25 MPa (3630 PSI), the maximum number of layers in a stack is 4 including the solenoid operated directional valve.
★4. The value range in parentheses represents the tightening torque requirements if the operating pressure is above 25 MPa (3630 PSI).

Mounting Surface

Mounting surface dimensions conform to ISO 4401 (Hydraulic fluid power four port directional control valves mounting surface) as listed in the table below.

Name of Valve	ISO Mtg. Surface Code No.
01 Series Modular Valve	ISO 4401-AB-03-4-A
03 Series Modular Valve	ISO 4401-AC-05-4-A
06 Series Modular Valve	ISO 4401-AE-08-4-A
10 Series Modular Valve	ISO 4401-AF-10-4-A

Stacking Example

● 03 Series

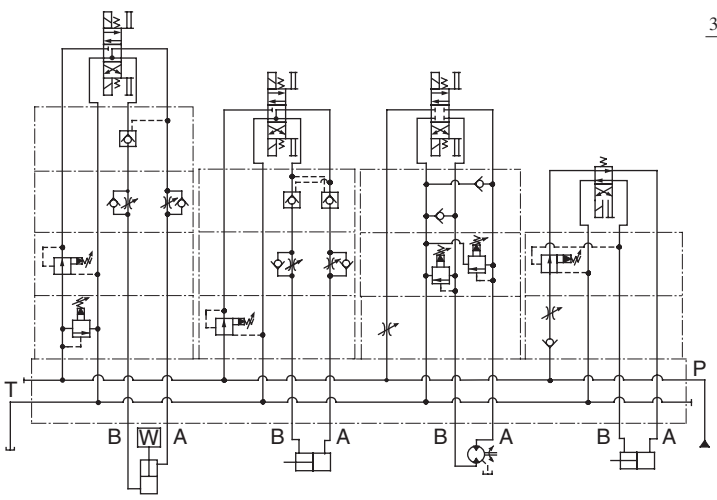

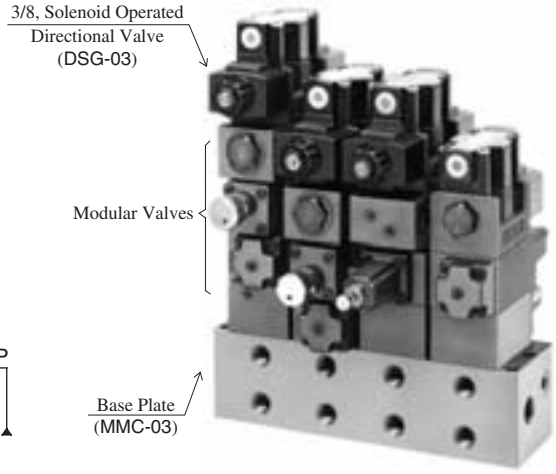

Instructions

Caution in the selection of valves and circuit designing

The selection of modular valves, to suit a particular function or hydraulic circuit, are made in exactly the same way as conventional valves, taking into account of the flow and pressure of each valve to be used. In some cases, the stacking system may be restricted, so please refer to the following instructions for stacking sequence. Please note, that when designing a system using modular stacking valves, due consideration should be given to working space for future maintenance.

Stacking sequence when using reducing valves (for "A" or "B" line) and pilot operated check valves.

Because reducing valves are spool type, there is an internal leakage. In the stacking sequence shown in the drawing left (incorrect), the cylinder moves due to leakage through the pilot pressure line .
Consequently, retaining the position of the cylinder using a pilot operated check valve becomes impossible. The stacking sequence shown in the drawing right (correct) is required in order to retain the cylinder position.

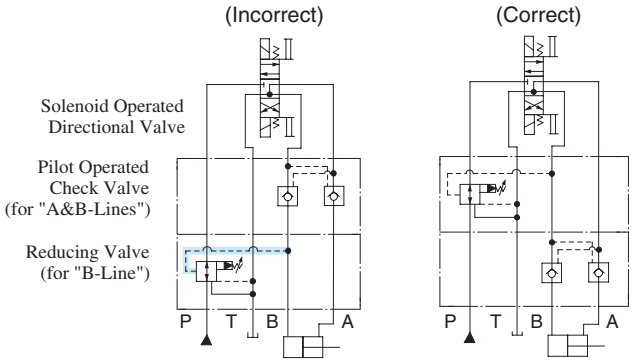

Stacking sequence when using reducing valves (for "A" or "B" line) and throttle and check valves (for metre-out).

In B to T flow in the drawing left (incorrect), pressure is generated at part with a throttle effect of the throttle and check valve. Depending upon the pressure so generated, the reducing valve may perform a pressure reducing function which causes a shortage of output power of the cylinder and spoils the smooth operation of the cylinder. Therefore, stacking sequence in the drawing right (correct) is required in this combination.

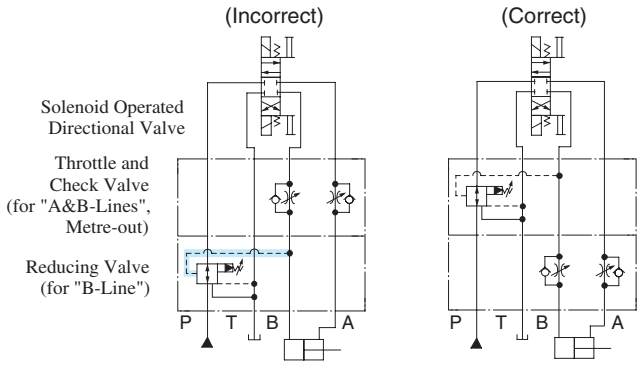

Stacking sequence when using pilot operated check valves and throttle and check valves (metre-out).

In A to T flow in the drawing left (incorrect), pressure is generated at part with a throttle effect of the throttle and check valve.
The pressure so generated acts to shut the pilot operated check valve and eventually creates an open and shut operation of the valve repeatedly which may cause the cylinder to have a knocking effect (the same effect will occur in the case of B to T flow). Therefore, the stacking sequence in the drawing right (correct) is required in this combination.

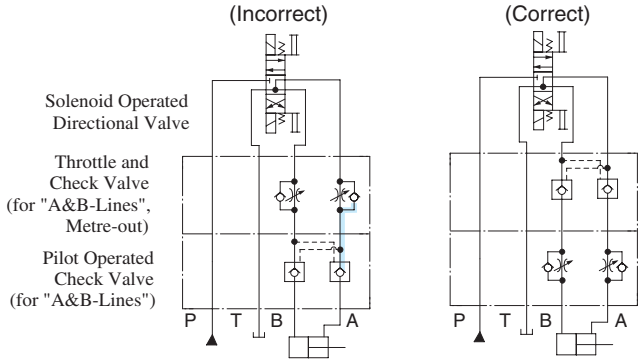

Stacking sequence when using brake valves and throttle and check valves.

In the drawing left (incorrect), pressure is generated at part (a load pressure and a back pressure from throttle effect). For structual reasons of the brake valve, the load pressure and back pressure act to open the valve, therefore, the setting pressure should be more than the pressure equal to the load pressure plus back pressure (Pa + Pb). If the setting pressure is less than Pa + Pb, the brake valve acts and brakes the movement of the actuator in operation, this eventually reduces the speed of the actuator. On the contrary, if the setting pressure is more than Pa + Pb, shock may occur when braking the actuator since the setting pressure is too high against the load pressure. Therefore, the stacking sequence in the drawing right (correct) is required in this combination.

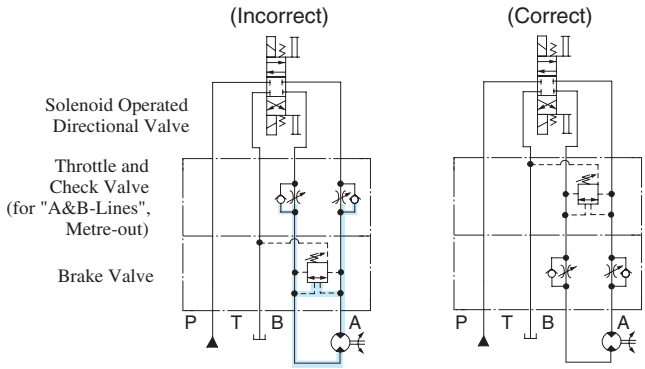

Base Plates and Sub-Plates

When mounting the modular valves, use base plates and sub-plates specified below. If these base plates and the sub-plates are not used, ensure that the mounting surface has a good machined finish.

Series	Base Plates		Sub-Plates	
	Model Numbers	Page	Model Numbers	Page
005 Series	MMC-005-∗-20	531	DSGM-005∗-20	342
01 Series	MMC-01-∗-40	573	DSGM-01∗-31	356
03 Series	MMC-03-T-∗-21	615	DSGM-03∗-40	373
06 Series	Consult your Yuken representative in advance.	—	DHGM-06∗-50	402
10 Series		—	DHGM-10∗-40	403

Mounting Bolts

Modular valves are mounted using stud bolts which are supplied in a kit form. When mounting, see the following table for tightening torque. After the test run, be sure to tighten again firmly within the specified torque.

Series	Bolt Kit Model Numbers	Tightening Torque Nm (in. lbs.)
005 Series	MBK-005-∗-20	2.5-3.5 (22-31)
01 Series	MBK-01-∗-30	5-6[6-7] (44-53[53-62])★
03 Series	MBK-03-∗-10	12-15 (106-133)
06 Series	MBK-06-∗-30	50-60 (443-531)
10 Series	MBK-10-∗-10	150-170 (1330-1505)

★The value range in parentheses represents the tightening torque requirements if the operating pressure is above 25 MPa (3630 PSI).

Assembly

Assembly should be carried out in clean conditions and in accordance with the following procedure. Cautious attention should be paid to ensure that the interface of the valves are clean and free from dirt or other foreign materials.

● **Assembly Procedure:**

• 005 Series

1) To stack modular valves and solenoid operated directional valves according to circuit requirements, match the O-ring surfaces to the mounting surface and check the alignment of the locating pins.
2) Align the right and left sides of the stacked valves.
3) Tighten the four mounting bolts to the specified tightening torque.
4) Perform an operational test and re-check mounting bolt torque, re-tightening if required.

• 01-10 Series

1) Screw-in the four stud bolts(06 and 10 series: six stud bolts), fully into the tapped holes on the mounting surface of the specified base plate, sub-plate or manifold.
2) Stack the modular valves and solenoid operated directional valves in accordance with the hydraulic circuit, place the O-ring inserted surface face onto the base plate and make sure that the port arrangement of the modular valves are in the correct position before stacking the valves onto the stud bolts.
3) Align both the end of the valves stacked.
4) Screw-in the four nuts(06 and 10 series: six nuts) onto the stud bolts and tighten with the specified torque. After the test run, be sure to re-tighten the nuts firmly within the specified torque.

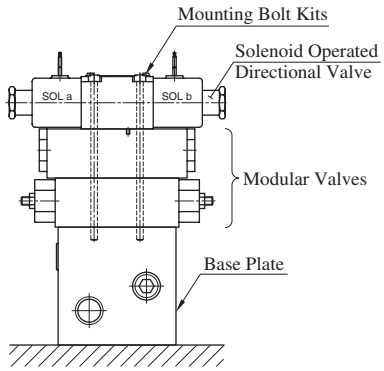

005 Series Modular Valves

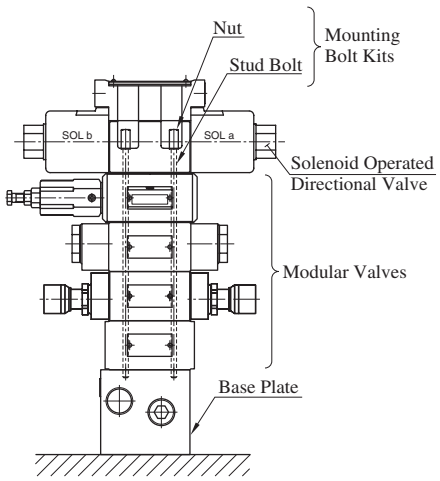

03 Series Modular Valves

Pressure Drop

Pressure drop curves of the modular valves are those based on viscosity of 35 mm^2/s (164 SSU) and specific gravity of 0.850.

When using the modular valves in conditions other than the above mentioned, find the appropriate values referring to the following table and formula.

● For any other viscosity, multiply the factors in the table below.

Viscosity	mm^2/s	15	20	30	40	50	60	70	80	90	100
	SSU	77	98	141	186	232	278	324	371	417	464
Factor		0.81	0.87	0.96	1.03	1.09	1.14	1.19	1.23	1.27	1.30

● For any other specific gravity (G'), the pressure drop (⊿P') may be obtained from the following formula.

$$\Delta P' = \Delta P\ (G'/0.850)$$

Interchangeability in Installation between Current and New Design

The model changed for the following models have been made.

Models		Model Numbers		Mtg. Inter-changeability	Main changes
		Current	New		
005 Series	Throttle and Check Modular Valves	MSW-005-∗-10	A MSB-005-∗-20 W	Yes	● Modification for large flow use. ● Addition of the valve for A & B lines.
	Pilot Operated Check Modular Valves	MP B W -005-2-10	A MPB-005-2-20 W	Yes	● Modification for large flow use. ● Addition of the valve for A lines.
	Base Plates	MMC-005-∗-10	MMC-005-∗-20	Yes	Change of the port hole dia. for large flow use (3.4 Dia. → 4.3 Dia.).
	Bolt Kits	MBK-005-∗-10	MBK-005-∗-20	Yes	● Addition of bolt kit for 4-stage stacking. ● Change the bolt kit model numbers to conform to the required bolt length for the 01 to 10 series (See the table below for details.)
01 Series	Throttle Modular Valves	MSP-01-30	MSP-01-50	Yes	Modification for large flow use.
	Throttle and Check Modular Valves	A MSB-01-∗∗-40 W	A MSB-01-∗∗-50 W	Yes	Improved Controllability and Operatability.
03 Series	Relief Modular Valves	MB∗-03-∗-20	MB∗-03-∗-30	Yes	Higher Operating Pressure.
	Reducing Modular Valves	P MRA-03-∗-20 B	P MRA-03-∗-30 B	Yes	Modification for large flow use.

Comparison of MBK-005 bolt kit model numbers

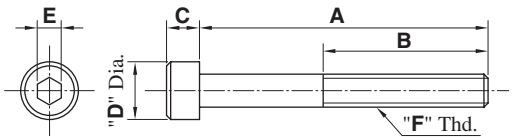

Bolt Kit Model Numbers		Dimensions mm (Inches)					"F" Thd.	The number of the laminating steps quantity of valves to be stacked including solenoid operated directional Valve
(New) 20 Design	(Old) 10 Design	A	B	C	D	E		
MBK-005-01-20	MBK-005-02-10	65(2.56)	20 (0.79)	4 (0.16)	7 (0.28)	3 (0.12)	M4	2
MBK-005-02-20	MBK-005-03-10	95(3.74)						3
MBK-005-03-20	———	125(4.92)						4
MBK-005-05-20	MBK-005-05-10	35(1.38)						1
MBK-005-01-2090	MBK-005-02-1090	65.1(2-9/16)	22.4 (0.88)	4.17 (0.164)	6.86 (0.27)	3.6 (9/64)	No.8-32 UNC	2
MBK-005-02-2090	MBK-005-03-1090	95.2(3-3/4)						3
MBK-005-03-2090	———	125.4(4-15/16)						4
MBK-005-05-2090	MBK-005-05-1090	34.9(1-3/8)						1

005 Series Modular Valves

Type of Modular Valve

Class	Model Numbers	Graphic Symbols	Page
	Solenoid Operated Directional Valve DSG-005-✻✻✻-✻-40	P T B A	336
Pressure Control Valves	Releif Valves (for "P-Line") MBP-005-✻-20		518
	Reducing Valves (for "P-Line") MRP-005-✻-20/2090		521
Flow Control Valves	Throttle and Check Valves (for "A-Line", Metre-out) MSA-005-X-20		524
	Throttle and Check Valves (for "A-Line", Metre-in) MSA-005-Y-20		
	Throttle and Check Valves (for "B-Line", Metre-out) MSB-005-X-20		
	Throttle and Check Valves (for "B-Line", Metre-in) MSB-005-Y-20		
	Throttle and Check Valves (for "A&B-Lines", Metre-out) MSW-005-X-20		
	Throttle and Check Valves (for "A&B-Lines", Metre-in) MSW-005-Y-20		
Directional Control Valves	Pilot Operated Check Valves (for "A-Line") MPA-005-2-20		527
	Pilot Operated Check Valves (for "B-Line") MPB-005-2-20		
	Pilot Operated Check Valves (for "A&B-Lines") MPW-005-2-20		
	Check Valves (for "P-Line") MCP-005-0-20		529
Modular Plates and Mounting Bolts	End Plates (Blocking plates) MDC-005-A-20		530
	Base Plates MMC-005-✻-20/2080/2090		531
	Bolts Kits MBK-005-✻-20/2090		534

Relief Modular Valves

Specifications

Model Numbers	Max. Operating Pressure MPa (PSI)	Max. Flow L/min (U.S.GPM)
MBP-005-∗-20	25 (3630)	15 (3.96)

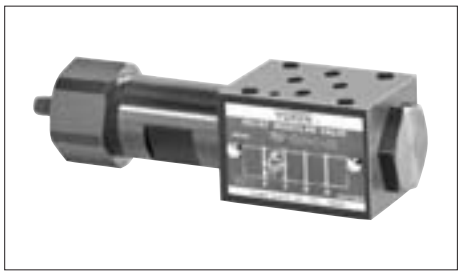

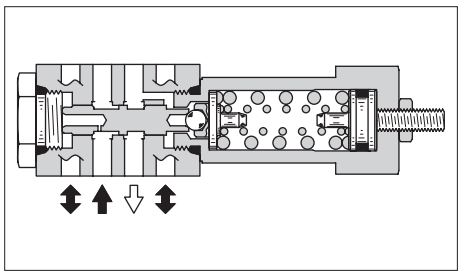

Model Number Designation

F-	MBP	-005	-C	-20	∗
Special Seals	Series Number	Valve Size	Pres. Adj. Range MPa (PSI)	Design Number	Design Standard
F: Special Seals for Phosphate Ester Type Fluids (Omit if not required)	**MBP** : Relief Valve for P-Line	**005**	**C**: ∗-16 ★1 (∗-2320) **H**: 7-25 (1020-3630)	**20**	Refer to ★2

★1. See the "Minimum Adjustment Pressure" of the next page for the item marked ∗.
★2. Design Standards: None ..... Japanese Standard "JIS", European Design Standard and N. American Design Standard

Graphic Symbol

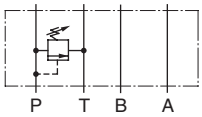

MBP-005

Instructions

- The minimum adjustment pressure equals the value obtained from the minimum adjustment pressure characteristics plus the tank line back pressure of the next page. This back pressure should include the value of the T-line pressure drop characteristics of the valves stacked to the base plate side of the modular valve.
- To make pressure adjustment, loosen the lock nut and turn the pressure adjustment screw clockwise or anti-clockwise. For an increase of pressure, turn the screw clockwise. Be sure to re-tighten the lock nut firmly after making adjustment to the pressure.
- In case of a small flow, the setting pressure may become unstable. To avoid this, refer to the minimum flow characteristic curve of the next page and use the valve within a range as shown with .

Typical Performance Characteristics

Hydraulic Fluid: Viscosity 35 mm^2/s (164 SSU), Specific Gravity 0.850

Minimum Flow

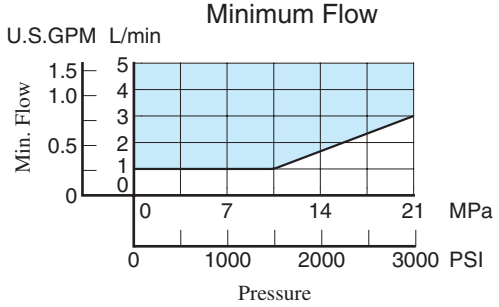

Nominal Override Characteristics

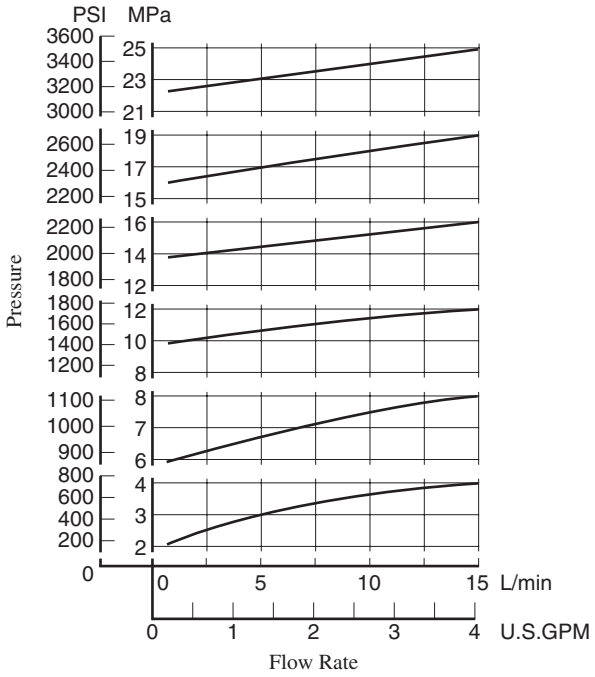

Pressure Drop

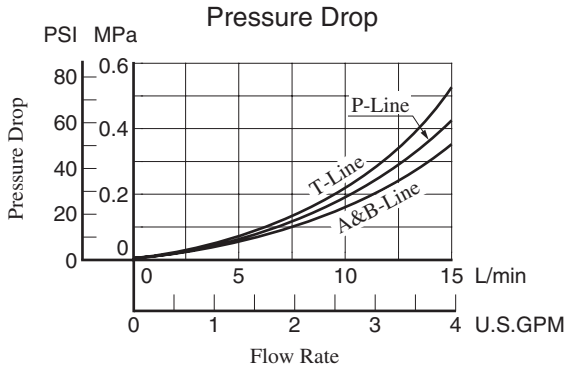

Min. Adjustment Pressure

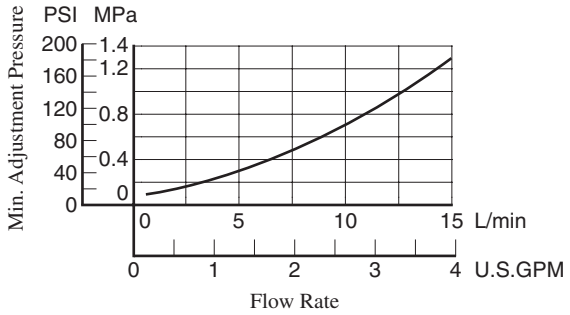

MBP-005-∗-20

DIMENSIONS IN MILLIMETRES (INCHES)

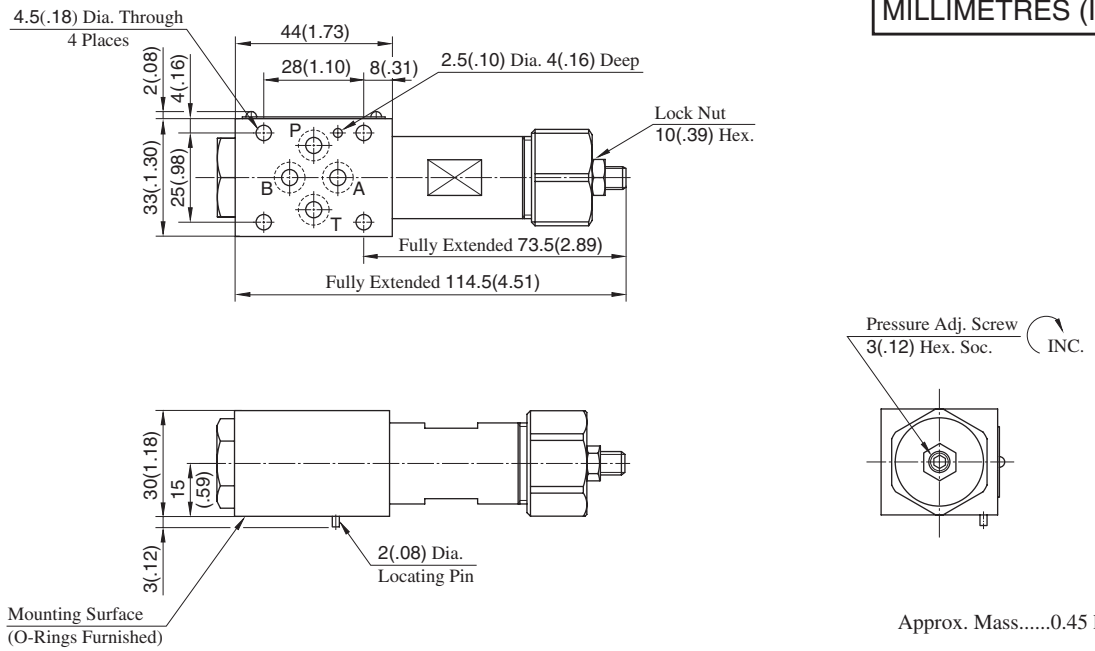

Approx. Mass.....0.45 kg(.99 lbs.)

Spare Parts List

MBP-005-∗-20

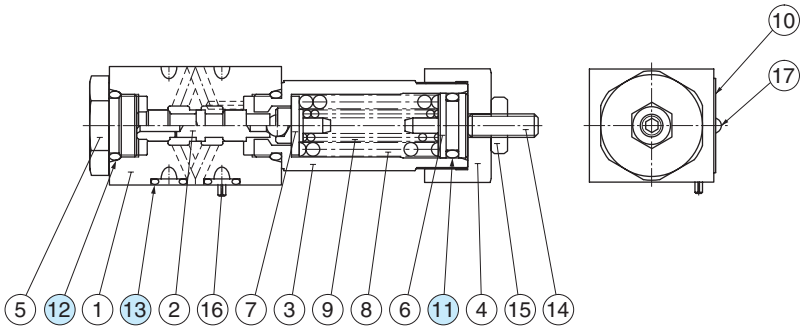

List of Seals

Item	Name of Parts	Part Numbers	Qty.	Remarks
11	O-Ring	SO-NA-P12.5	1	Included in Seal Kit Kit No. : KS-MBP-005-20
12	O-Ring	SO-NB-P14	2	
13	O-Ring	SO-NB-P6	4	

Reducing Modular Valves

Specifications

Model Numbers	Max. Operating Pressure MPa (PSI)	Max. Flow L/min (U.S.GPM)
MRP-005-∗-20/2090	25 (3630)	15 (3.96) ★

★ If the pressure is set below 1.6 MPa (232 PSI), the maximum flow is limited. See the minimum adjustment pressure vs. maximum flow characteristics and during use, stay within the shaded zone on the graph.

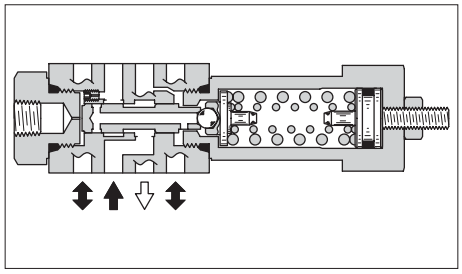

Model Number Designation

F-	MRP	-005	-B	-20	∗
Special Seals	Series Number	Valve Size	Pres. Adj. Range MPa (PSI)	Design Number	Design Standard
F: Special Seals for Phosphate Ester Type Fluids (Omit if not required)	**MRP** : Reducing Valve for P-Line	**005**	**B**: ∗-7 (∗-1020) ★1 **C**: 3.5-16 (510-2320) **H**: 7-24.5 (1020-3550)	**20**	Refer to ★2

★ 1. See the "Minimum Adjustment Pressure vs. Maximum Flow" of the next page for the item marked ∗.
★ 2. Design Standards: None ..... Japanese Standard "JIS" and European Design Standard
90 ..... N. American Design Standard

Instructions

- The minimum adjustment pressure equals the value obtained from the minimum adjustment pressure characteristics plus the tank line back pressure of the next page. This back pressure should include the value of the T-line pressure drop characteristics of the valves stacked to the base plate side of the modular valve.
- To make pressure adjustment, loosen the lock nut and turn the pressure adjustment screw clockwise or anti-clockwise. For an increase of pressure, turn the screw clockwise. Be sure to re-tighten the lock nut firmly after making adjustment to the pressure.

Graphic Symbol

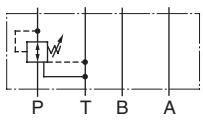

MRP-005

Typical Performance Characteristics

Hydraulic Fluid: Viscosity 35 mm^2/s (164 SSU), Specific Gravity 0.850

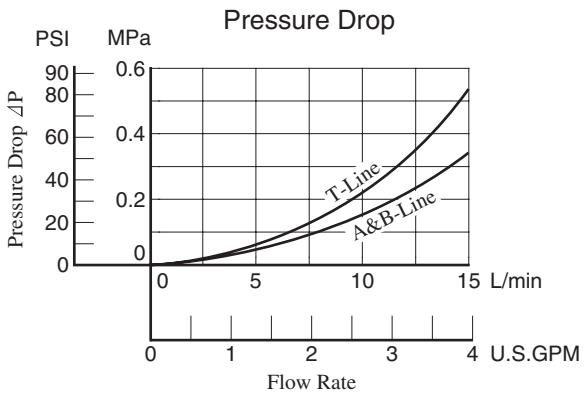

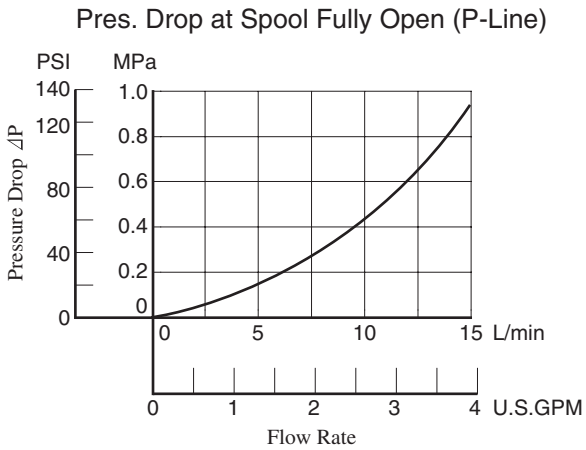

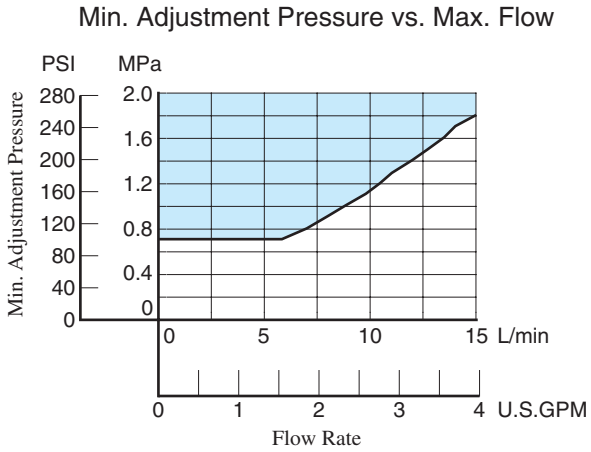

MRP-005-∗-20/2090

DIMENSIONS IN MILLIMETRES (INCHES)

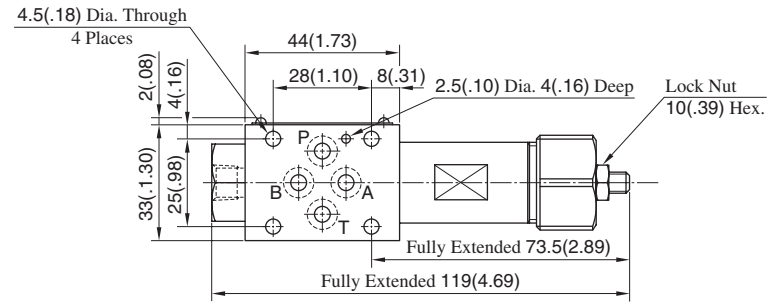

Model Numbers	Thread Size "**C**" Thd.
MR∗-005-∗-20	Rc 1/8 = 1/8 BSP.Tr
MR∗-005-∗-2090	1/8 NPT

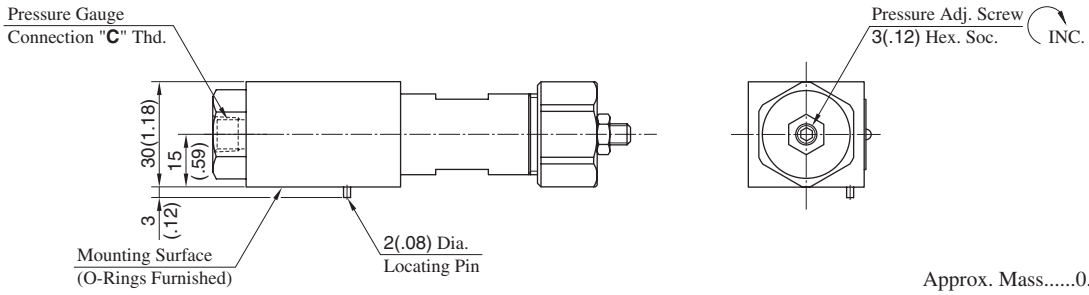

Approx. Mass.....0.45 kg(.99 lbs.)

Spare Parts List

MRP-005-∗-20/2090

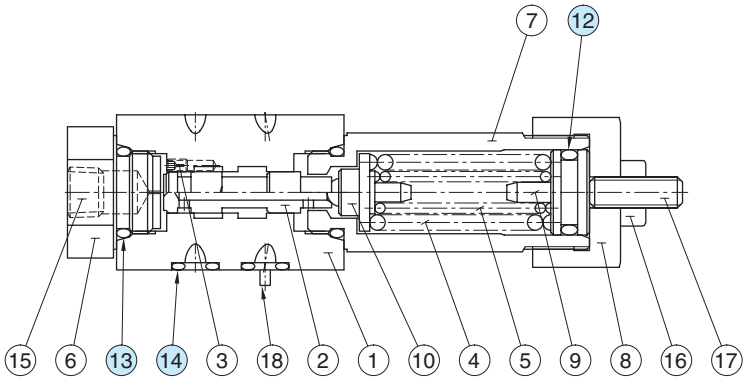

List of Seals

Item	Name of Parts	Part Numbers	Qty.	Remarks
12	O-Ring	SO-NA-P12.5	1	Included in Seal Kit Kit No. : KS-MRP-005-20
13	O-Ring	SO-NB-P14	2	
14	O-Ring	SO-NB-P6	4	

Throttle and Check Modular Valves

Specifications

Model Numbers	Max. Operating Pressure MPa (PSI)	Max. Flow L/min (U.S.GPM)
MSW-005-∗-20 MSA-005-∗-20 MSB-005-∗-20	25 (3630)	15 (3.96)

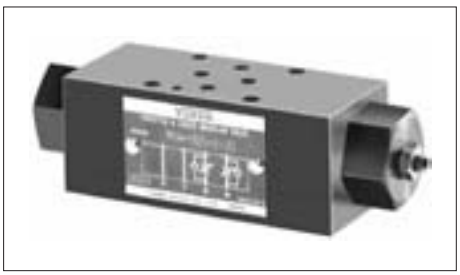

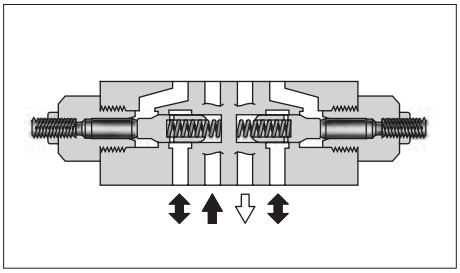

Model Number Designation

F-	MSW	-005	-X	-20	∗
Special Seals	Series Number	Valve Size	Direction of Flow	Design Number	Design Standard
F: Special Seals for Phosphate Ester Type Fluids (Omit if not required)	**MSA**: Throttle and Check Valve for A-Line **MSB**: Throttle and Check Valve for B-Line **MSW**: Throttle and Check Valve for A&B-Lines	**005**	**X**: Metre-out **Y**: Metre-in	**20**	Refer to ★

★ Design Standards: None ..... Japanese Standard "JIS", European Design Standard and N. American Design Standard

Flow Adjustment

To make flow rate adjustment, loosen the lock nut and turn the flow adjustment screw clockwise or anti-clockwise. To throttle the flow, turn the screw clockwise. Be sure to re-tighten the lock nut firmly after the adjustment of the flow rate is completed.

Graphic Symbols

Metre-out	Metre-in
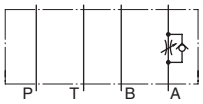 MSA-005-X	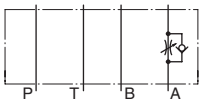 MSA-005-Y
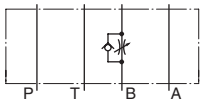 MSB-005-X	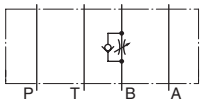 MSB-005-Y
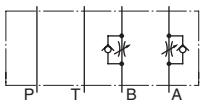 MSW-005-X	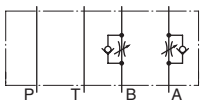 MSW-005-Y

Typical Performance Characteristics

Hydraulic Fluid: Viscosity 35 mm^2/s (164 SSU), Specific Gravity 0.850

Pressure Drop

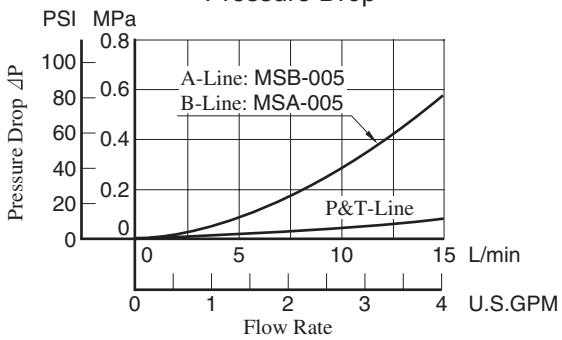

Pressure Drop for Free Flow

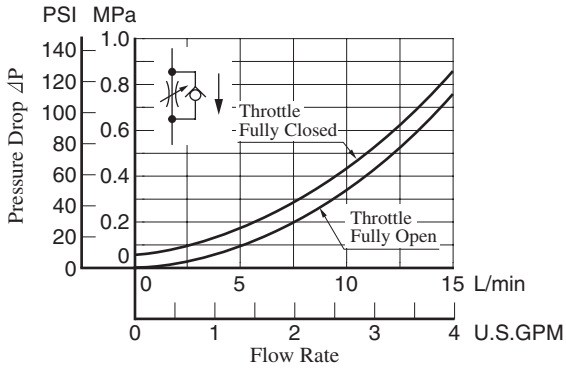

Metred Flow vs. Screw Position

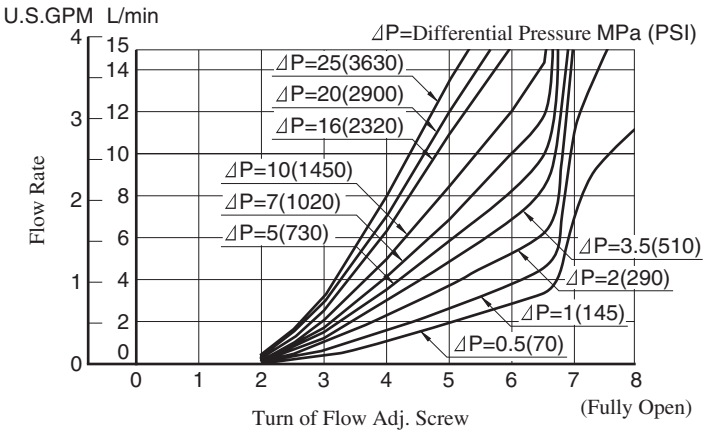

Pressure Drop at Throttle Fully Open

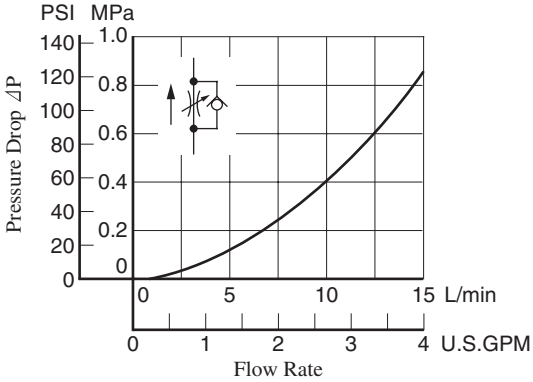

F

005 Series Modular Valves

MSW-005-∗-20

DIMENSIONS IN MILLIMETRES (INCHES)

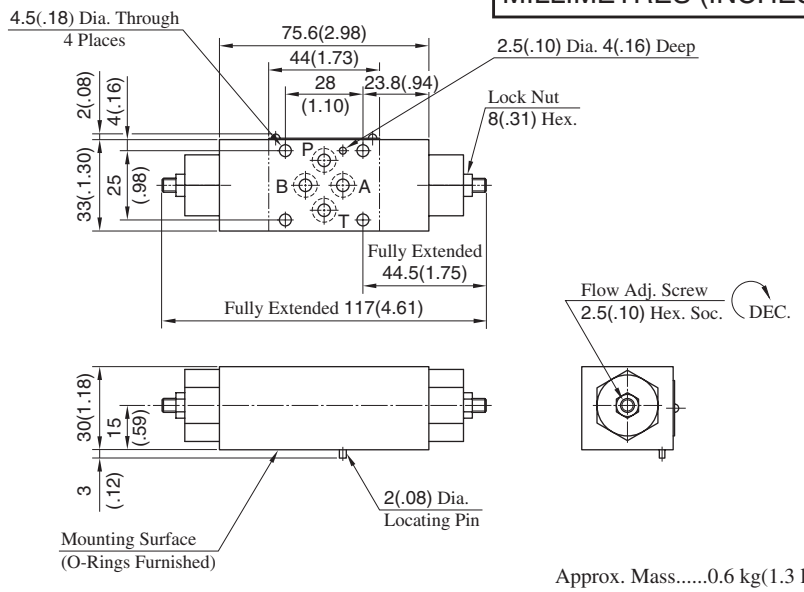

Approx. Mass.....0.6 kg(1.3 lbs.)

MSA-005-∗-20

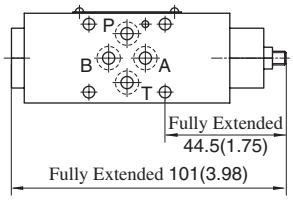

Approx. Mass.....0.55 kg(1.2 lbs.)

MSB-005-∗-20

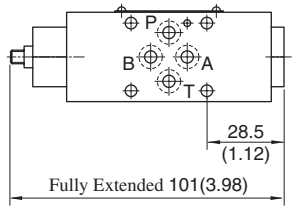

Approx. Mass.....0.55 kg(1.2 lbs.)

Spare Parts List

MSA-005-X/Y-20

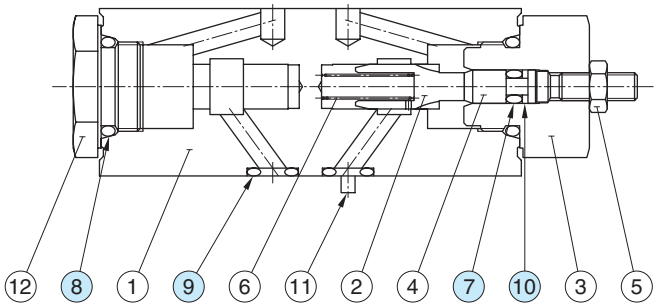

MSB-005-X/Y-20

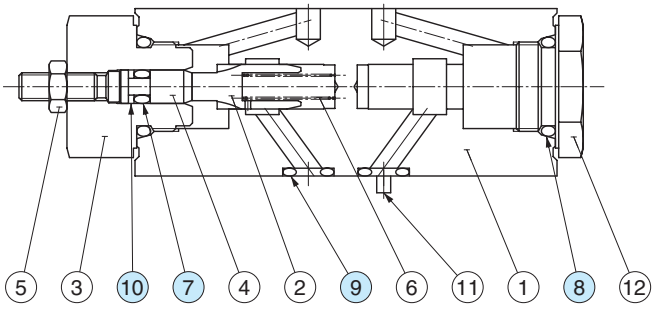

MSW-005-X/Y-20

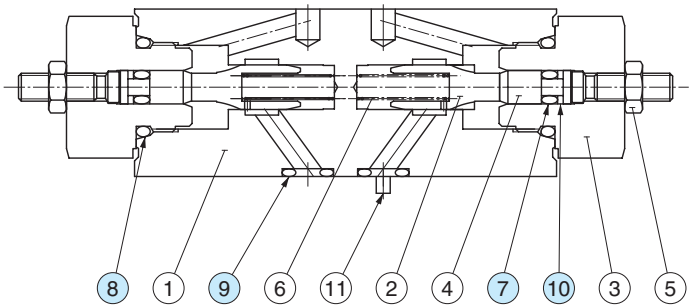

List of Seals

Item	Name of Parts	Part Numbers	Qty. MSA MSB	Qty. MSW
7	O-Ring	SO-NA-P3	1	2
8	O-Ring	SO-NB-P6	4	4
9	O-Ring	SO-NB-P14	2	2
10	Back Up Ring	SO-BB-P3	1	2

List of Seal Kits

Valve Model Numbers	Seal Kit Numbers
MSA-005	KS-MSA-005-20
MSB-005	
MSW-005	KS-MSW-005-20

Pilot Operated Check Modular Valves

Specifications

Model Numbers	Max. Operating Pressure MPa (PSI)	Max. Flow L/min (U.S.GPM)
MPA-005-2-20 MPB-005-2-20 MPW-005-2-20	25 (3630)	15 (3.96)

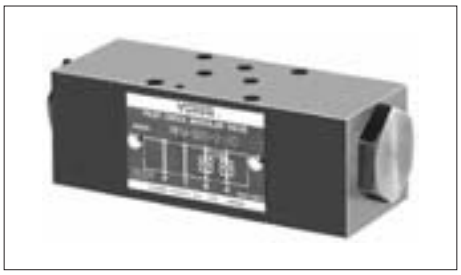

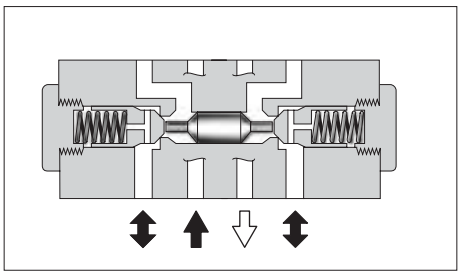

Model Number Designation

F-	MPW	-005	-2	-20	*
Special Seals	Series Number	Valve Size	Cracking Pressure MPa (PSI)	Design Number	Design Standard
F: Special Seals for Phosphate Ester Type Fluids (Omit if not required)	**MPA**: Pilot Operated Check Valve for A-Line **MPB**: Pilot Operated Check Valve for B-Line **MPW**: Pilot Operated Check Valve for A&B-Lines	**005**	**2**: 0.2 (29)	**20**	Refer to ★

★ Design Standards: None ..... Japanese Standard "JIS", European Design Standard and N. American Design Standard

Graphic Symbols

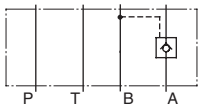

MPA-01

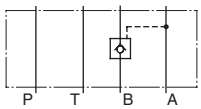

MPB-01

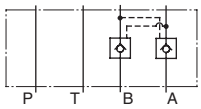

MPW-01

Typical Performance Characteristics

Hydraulic Fluid: Viscosity 35 mm^2/s (164 SSU), Specific Gravity 0.850

Pressure Drop for Free Flow/ Reversed Controlled Flow

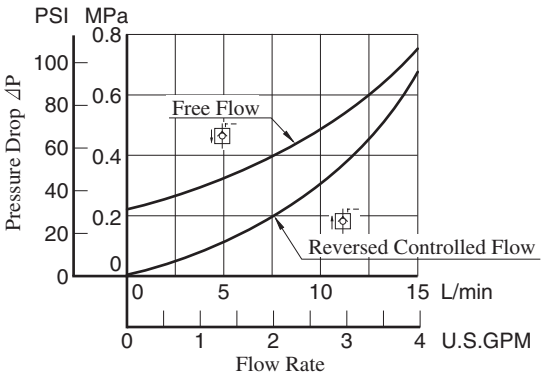

Pressure Drop

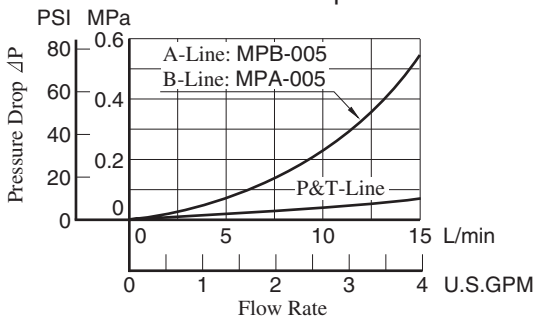

Min. Pilot Pressure

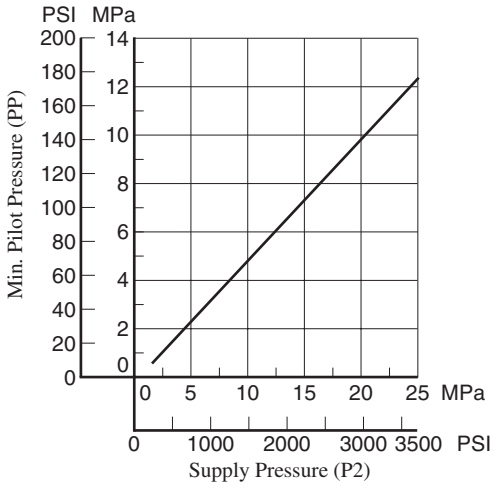

MPA-005-2-20
MPB-005-2-20
MPW-005-2-20

DIMENSIONS IN MILLIMETRES (INCHES)

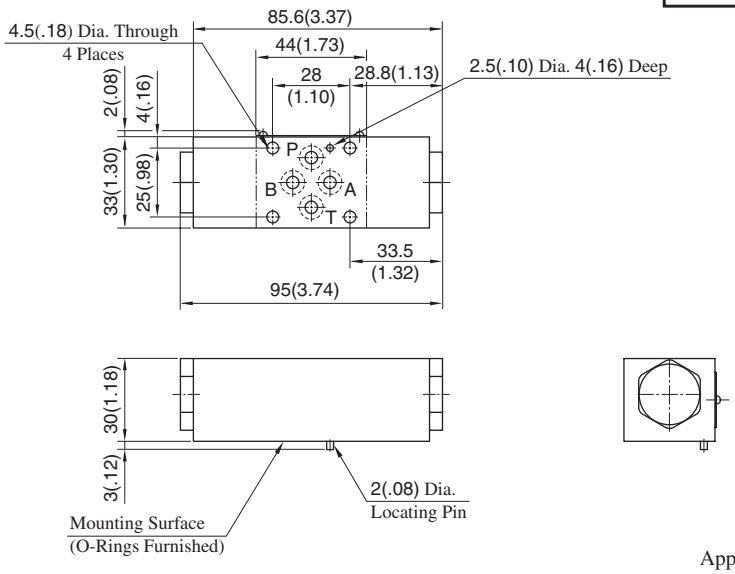

Approx. Mass.....0.55 kg(1.2 lbs.)

Spare Parts List

MPA-005-2-20

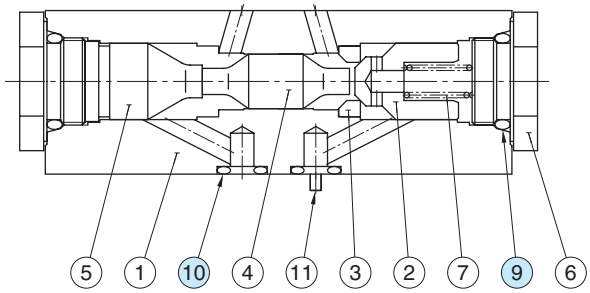

List of Seals

Item	Name of Parts	Part Numbers	Qty.	Remarks
9	O-Ring	SO-NB-P14	2	Included in Seal Kit Kit No. : KS-MPA-005-20
10	O-Ring	SO-NB-P6	4	

MPB-005-2-20

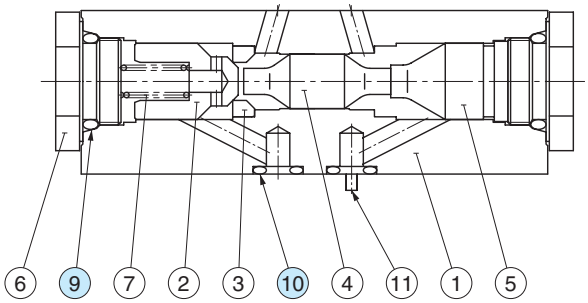

MPW-005-2-20

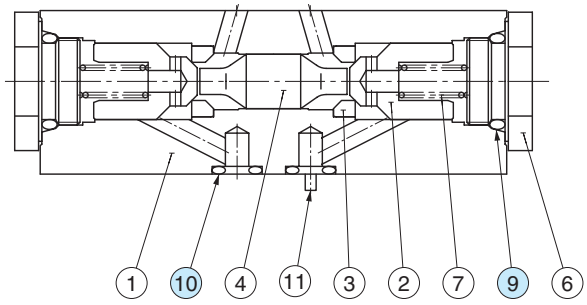

Check Modular Valves

Specifications

Model Number	Max. Operating Pressure MPa (PSI)	Max. Flow L/min (U.S.GPM)
MCP-005-0-20	25 (3630)	15 (3.96)

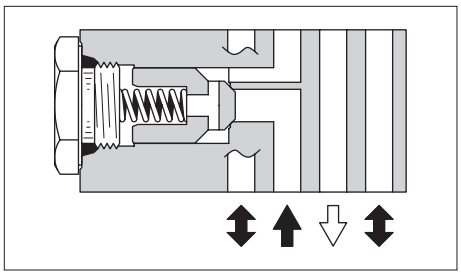

Model Number Designation

F-	MCP	-005	-0	-20	*
Special Seals	Series Number	Valve Size	Cracking Pressure MPa (PSI)	Design Number	Design Standard
F: Special Seals for Phosphate Ester Type Fluids (Omit if not required)	**MCP**: Check Valve for P-Line	**005**	**0**: 0.035(5)	**20**	Refer to ★

★ Design Standards: None ..... Japanese Standard "JIS", European Design Standard and N. American Design Standard

Graphic Symbol

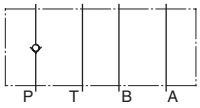

MCP-005

Typical Performance Characteristics

Hydraulic Fluid: Viscosity 35 mm^2/s (164 SSU), Specific Gravity 0.850

Pressure Drop for Free Flow

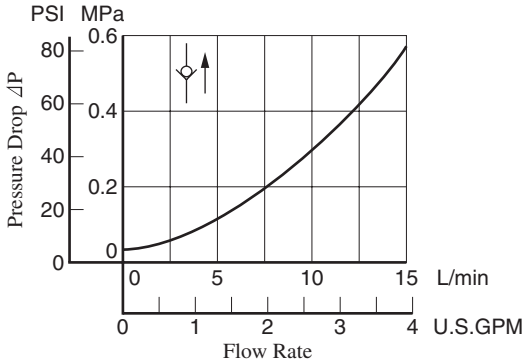

Pressure Drop

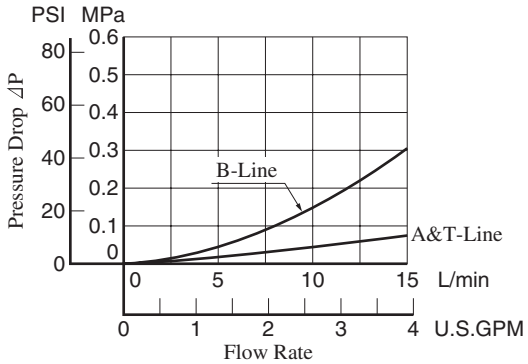

MCP-005-0-20

DIMENSIONS IN MILLIMETRES (INCHES)

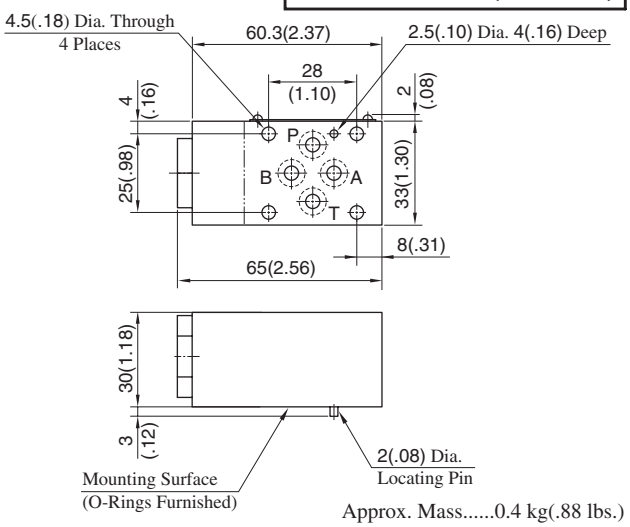

Approx. Mass.....0.4 kg(.88 lbs.)

Spare Parts List

MCP-005-0-20

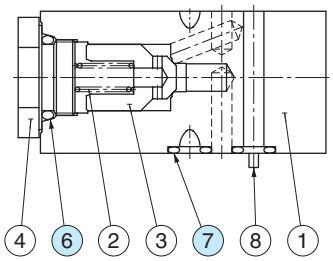

List of Seals

Item	Name of Parts	Part Numbers	Qty.	Remarks
6	O-Ring	SO-NB-P14	2	Included in Seal Kit Kit No. : KS-MPA-005-20
7	O-Ring	SO-NB-P6	4	

F

005 Series Modular Valves

End Plates

Blocking plates are used for auxiliary mounting surface or for closing unnecessary circuits.

Specifications

Max. Operating Pressure ---------- 25 MPa (3630 PSI)

Model Number Designation

F-	MDC	-005	-A	-20	*
Special Seals	Series Number	Plate Size	Type of Plate	Design Number	Design Standard
F: Special Seals for Phosphate Ester Type Fluids (Omit if not required)	**MDC**: End Plate	**005**	**A**: Blocking Plate	**20**	Refer to ★

★ Design Standards: None ..... Japanese Standard "JIS", European Design Standard and N. American Design Standard

MDC-005-A-20

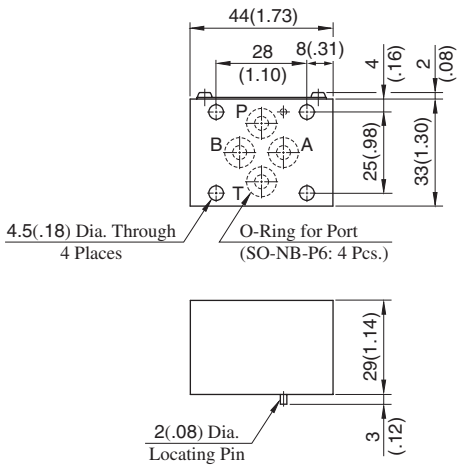

DIMENSIONS IN MILLIMETRES (INCHES)

Approx. Mass.....0.3 kg(.66 lbs.)

Graphic Symbol

MDC-005-A

Base Plates For Modular Valves

Specifications

Max. Operating Pressure ---------- 25 MPa (3630 PSI)

Model Number Designation

MMC	-005	-5	-20	*
Series Number	Plate Size	Number of Stations	Design Number	Design Standard
MMC: Base Plate	**005**	**1** : 1 Station **2** : 2 Stations **3** : 3 Stations **4** : 4 Stations **5** : 5 Stations	**20**	**None** : Japanese Standard "JIS" **80** : European Design Standard **90** : N.American Design Standard

Instructions

- Port Used: Base plate has more than one pressure port "P" and tank port "T". Any one of these ports or two or more ports nay be used. However, please note that the ports marked with (P) or (T) in the drawing are normally plugged. Remove the plugs when using such ports. Make sure that ports that are not cuurently used are properly plugged.

Graphic Symbols

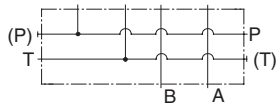

MMC-005-1

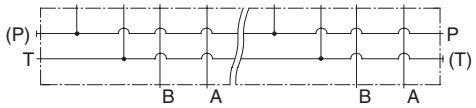

MMC-005-2-5

Pressure Drop

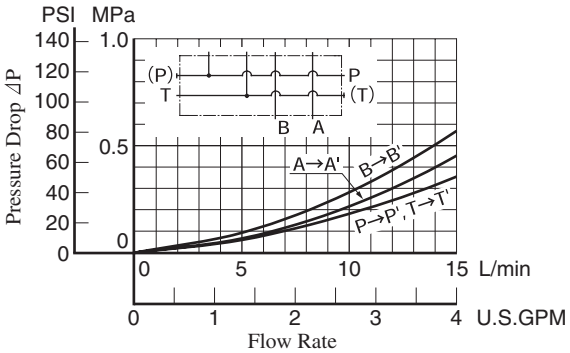

Mounting Surface Dimensions for 005 Series Modular Valve

When standard base plates (MMC-005) are not used, the mounting surface described on the right must be prepared. The mounting surface should have a good machined finish.

Design Std.	"**C**" Thd.	"**E**"
Japanese Std. "JIS" and European Design Std.	M4	7.5 (.30)
N. American Design Std.	No.8 - 32 UNC	10 (.39)

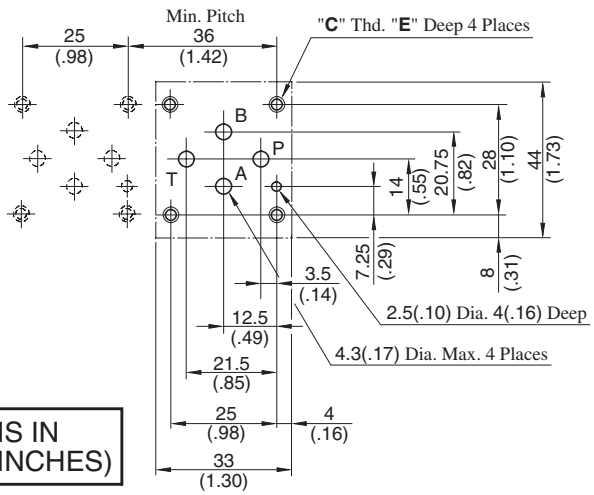

DIMENSIONS IN MILLIMETRES (INCHES)

F

005 Series Modular Valves

MMC-005-1-20/2090

DIMENSIONS IN MILLIMETRES (INCHES)

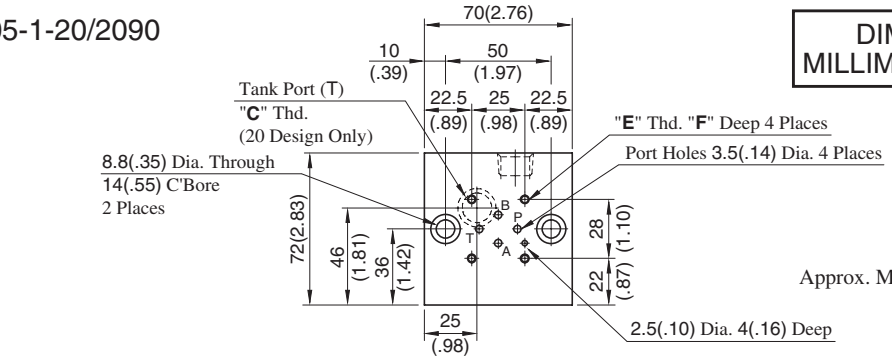

Approx. Mass : 2.8 kg (6.2 lbs.)

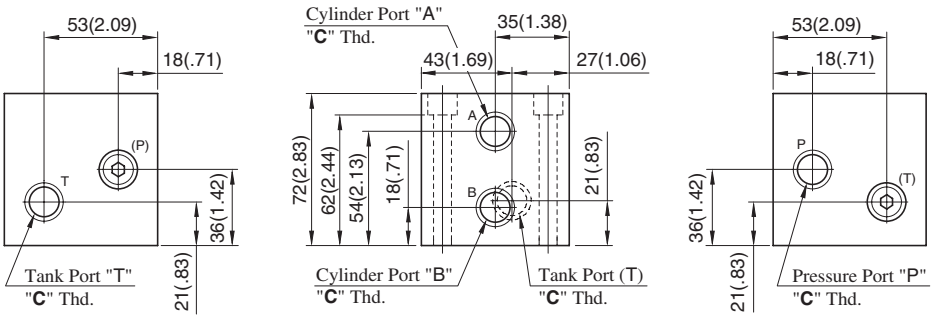

MMC-005-∗-20/2090

Number of Station (2-5 Stations)

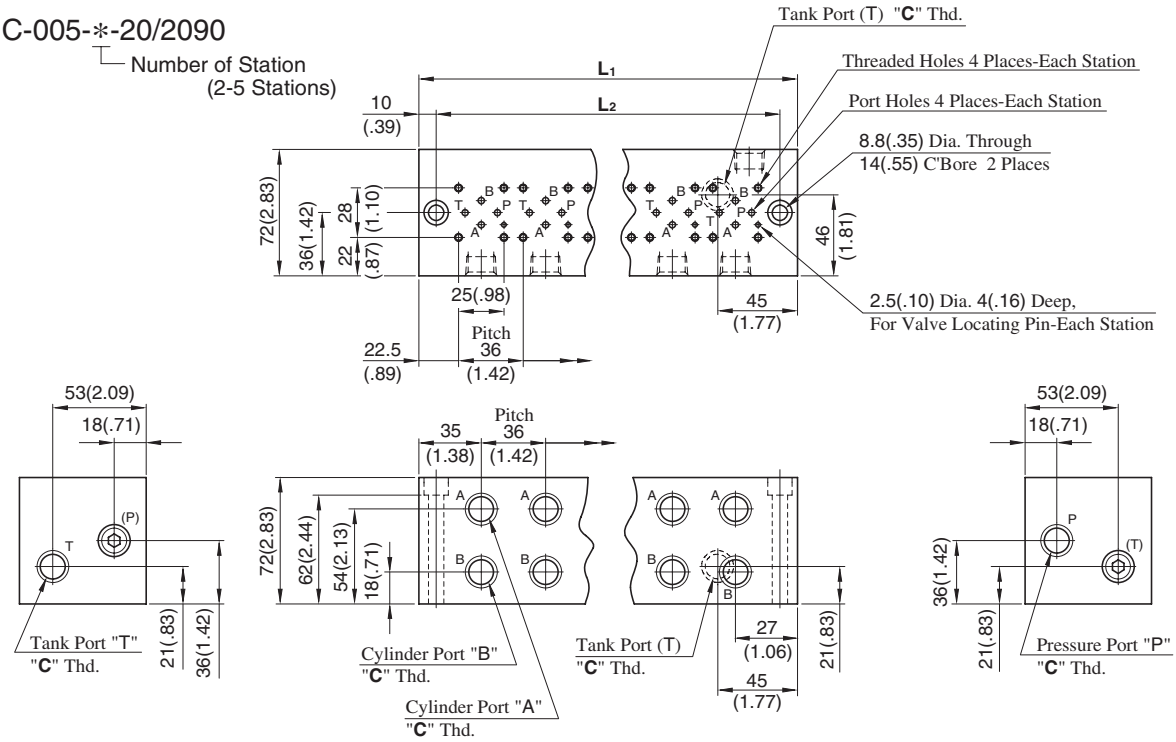

- For other dimensions, refer to the above Model MMC-005-1.

Model Numbers	Thread Size		Dimensions mm (Inches)
	"C" Thd.	"E" Thd.	F
MMC-005-∗-20	Rc 3/8	M4	8 (.31)
MMC-005-∗-2090	3/8 NPT	No. 8-32 UNC	10 (.39)

Model Numbers	Dimensions mm (Inches)		Approx. Mass kg (lbs.)
	L_1	L_2	
MMC-005-2	106 (4.17)	86 (3.39)	4.3 (9.5)
MMC-005-3	142 (5.59)	122 (4.80)	5.8 (12.8)
MMC-005-4	178 (7.01)	158 (6.22)	7.2 (15.9)
MMC-005-5	214 (8.43)	194 (7.64)	8.7 (19.2)

DIMENSIONS IN MILLIMETRES (INCHES)

MMC-005-1-2080

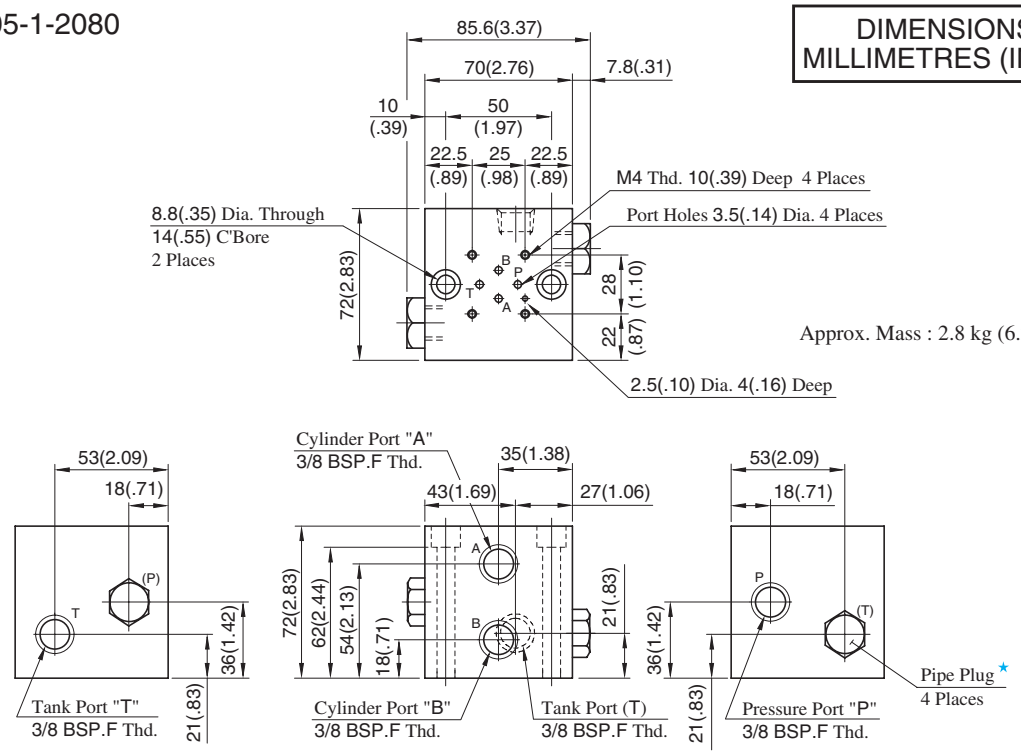

Approx. Mass : 2.8 kg (6.2 lbs.)

MMC-005-∗-2080

Number of Station (2-5 Stations)

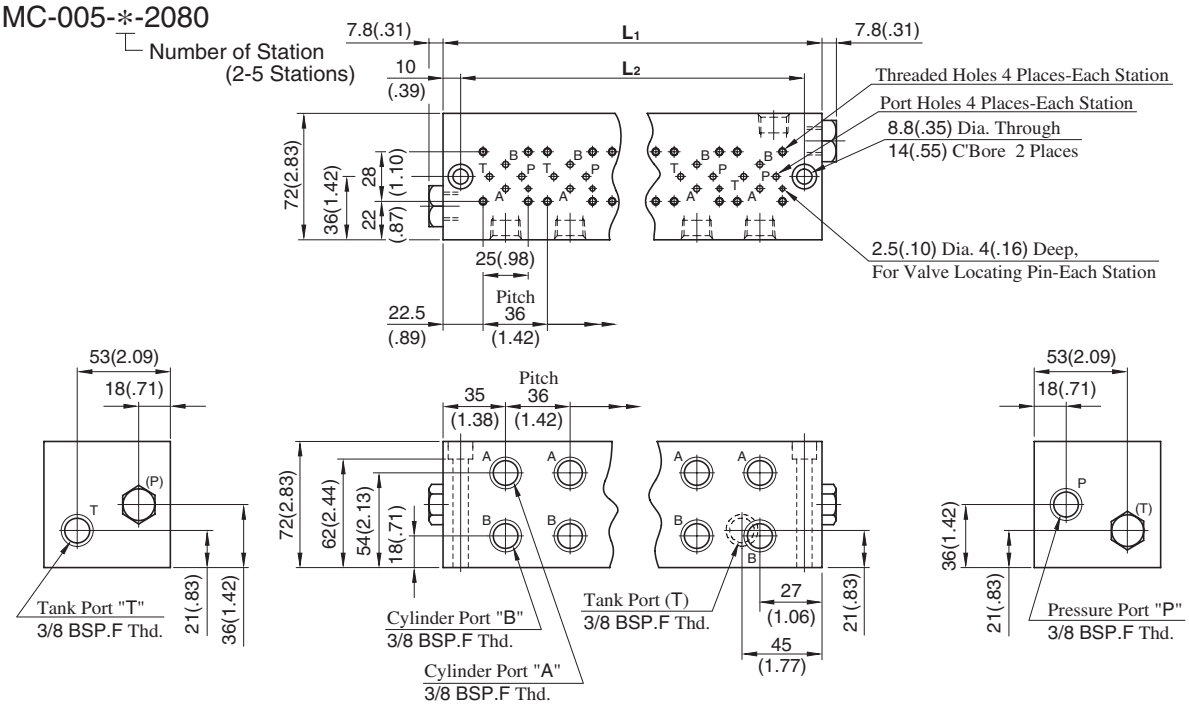

• For other dimensions, refer to the above Model MMC-005-1.

Model Numbers	Dimensions mm (Inches)		Approx. Mass kg (lbs.)
	L_1	L_2	
MMC-005-2	106 (4.17)	86 (3.39)	4.3 (9.5)
MMC-005-3	142 (5.59)	122 (4.80)	5.8 (12.8)
MMC-005-4	178 (7.01)	158 (6.22)	7.2 (15.9)
MMC-005-5	214 (8.43)	194 (7.64)	8.7 (19.2)

★ Detail of Pipe Plug

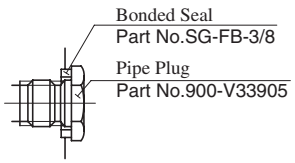

Mounting Bolt Kits

To mount the valves, four M4 bolts are used. The combination of valves varies with circuits. So, we have several mounting bolt kits suitable for different valve combinations. From the selection chart, choose a necessary bolt kit and specify it with model number when ordering.

Model Number Designation

MBK	-005	-02	-20	*
Series Number	Size of Modular Valve	Bolt Number	Design Number	Design Standard
MBK: Bolt Kits for Modular Valves	**005**	**01,02,03,05** (Refer to the following chart)	**20**	**None**: Japanese Standard "JIS" and European Design Standard **90**: N.American Design Standard

Bolt Kits Selection Chart

Model Numbers	Quantity of valves to be stacked			Approx. Mass g (1bs.)
	Solenoid Operated Directional Valve (DSG-005)	Modular Valve (MDC-005)	Modular Valve (M**-005)	
MBK-005-01-20*	1	0	1	30(.07)
	0	1		
MBK-005-02-20*	1	0	2	40(.09)
	0	1		
MBK-005-03-20*	1	0	3	50(.11)
	0	1		
MBK-005-05-20*	1★	0	0	18(.04)
	0	1		

★ The solenoid operated directional valve comes with mounting bolts.

- **Bolts Kit Composition:**
  Soc. Hd. Cap Screw.....4 Pcs.
- **Tightening Torque:**
  2.5 - 3.5 Nm (22-31 in. lbs.)

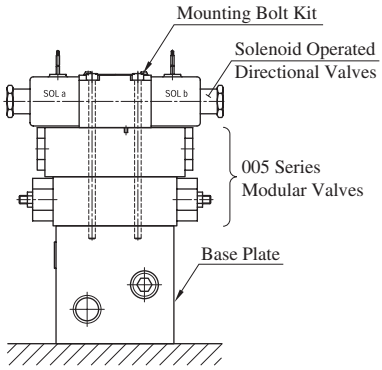

Stacking Example

MBK-005-*-20/2090

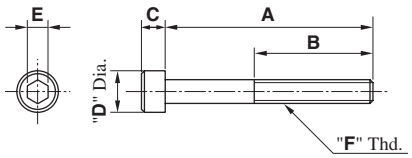

Model Numbers	Dimensions mm (Inches)					"F" Thd.
	A	B	C	D	E	
MBK-005-01-20	65 (2.56)	20 (.79)	4 (.16)	7 (.28)	3 (.12)	M4
MBK-005-02-20	95 (3.74)					
MBK-005-03-20	125 (4.92)					
MBK-005-05-20	35 (1.38)					
MBK-005-01-2090	65.1 (2-9/16)	22.4 (.88)	4.17 (.164)	6.86 (.27)	3.6 (9/64)	No. 8-32 UNC
MBK-005-02-2090	95.2 (3-3/4)					
MBK-005-03-2090	125.4 (4-15/16)					
MBK-005-05-2090	34.9 (1-3/8)					

Type of Modular Valve

Class	Model Numbers	Graphic Symbols	Page
	Solenoid Operated Directional Valve (S-)DSG-01-✻✻✻-✻-70/7090 E-DSG-01-✻✻✻-D✻-60/6090 T-DSG-01-✻✻✻-D24✻-70/7090 G-DSG-01-✻✻✻-✻-50/5090	P T B A	344 378 379 412
Pressure Control Valves	Releif Valves (for "P-Line") MBP-01-✻-30		536
	Releif Valves (for "A-Line") MBA-01-✻-30		536
	Releif Valves (for "B-Line") MBB-01-✻-30		536
	Reducing Valves (for "P-Line") MRP-01-✻-30/3090		539
	Reducing Valves (for "A-Line") MRA-01-✻-30/3090		539
	Reducing Valves (for "B-Line") MRB-01-✻-30/3090		539
	Brake Valves MBR-01-✻-30		542
	Sequence Valves (for "P-Line") MHP-01-✻-30		544
	Counterbalance Valves (for "A-Line") MHA-01-✻-30		544
	Pressure Switch Valves (for "P-Line") MJP-01-✻-✻-10		547
	Pressure Switch Valves (for "A-Line") MJA-01-✻-✻-10		547
	Pressure Switch Valves (for "B-Line") MJB-01-✻-✻-10		547
Flow Control Valves	Flow Control Valves (for "P-Line") MFP-01-10		551
	Flow Control and Check Valves (for "A-Line", Metre-out) MFA-01-X-10		551
	Flow Control and Check Valves (for "A-Line", Metre-in) MFA-01-Y-10		551
	Flow Control and Check Valves (for "B-Line", Metre-out) MFB-01-X-10		551
	Flow Control and Check Valves (for "B-Line", Metre-in) MFB-01-Y-10		551
	Flow Control and Check Valves (for "A&B-Lines", Metre-out) MFW-01-X-10		551
	Flow Control and Check Valves (for "A&B-Lines", Metre-in) MFW-01-Y-10		551
	Temperature Compensated Throttle and Check Valves (for "A-Line", Metre-out) MSTA-01-X-10		555
	Temperature Compensated Throttle and Check Valves (for "B-Line", Metre-out) MSTB-01-X-10		555
	Temperature Compensated Throttle and Check Valves (for "A&B-Lines", Metre-out) MSTW-01-X-10		555

Class	Model Numbers	Graphic Symbols (P T B A)	Page
Flow Control Valves	Throttle Valves (for "P-Line") MSP-01-50		559
	Check and Throttle Valves (for "P-Line") MSCP-01-30		561
	Throttle and Check Valves (for "A-Line", Metre-out) MSA-01-X-50		563
	Throttle and Check Valves (for "A-Line", Metre-in) MSA-01-Y-50		563
	Throttle and Check Valves (for "B-Line", Metre-out) MSB-01-X-50		563
	Throttle and Check Valves (for "B-Line", Metre-in) MSB-01-Y-50		563
	Throttle and Check Valves (for "A&B-Lines", Metre-out) MSW-01-X-50		563
	Throttle and Check Valves (for "A&B-Lines", Metre-in) MSW-01-Y-50		563
	Throttle and Check Valves (for "A&B-Lines", Metre-out, Metre-in) MSW-01-XY-50		563
	Throttle and Check Valves (for "A&B-Lines", Metre-in, Metre-out) MSW-01-YX-50		563
Directional Control Valves	Check Valves (for "P-Line") MCP-01-✻-30		567
	Check Valves (for "T-Line") MCT-01-✻-30		567
	Anti-Cavitation Valves MAC-01-30		568
	Pilot Operated Check Valves (for "A-Line") MPA-01-✻-40/4001		569
	Pilot Operated Check Valves (for "B-Line") MPB-01-✻-40/4001		569
	Pilot Operated Check Valves (for "A&B-Lines") MPW-01-✻-40/4001		569
Modular Plates and Mounting Bolts	End Plates (Blocking plates) MDC-01-A-30		571
	End Plates (Bypass plates) MDC-01-B-30		571
	Connecting Plates (for "P&A-Lines") MDS-01-PA-30/3090		572
	Connecting Plates (for "P&B-Lines") MDS-01-PB-30/3090		572
	Connecting Plates (for "A&T-Lines") MDS-01-AT-30/3090		572
	Base Plates MMC-01-✻-40/4080/4090		573
	Bolt Kits MBK-01-✻-30/3090		576

Relief Modular Valves

Specifications

Model Numbers	Max. Operating Pressure MPa (PSI)	Max. Flow L/min (U.S.GPM)
MBP-01-∗-30 MBA-01-∗-30 MBB-01-∗-30	21 (3050)	35 (9.25)

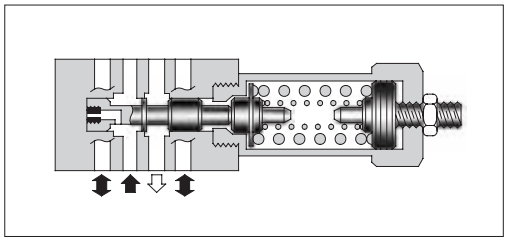

Model Number Designation

F-	MBP	-01	-C	-30	∗
Special Seals	Series Number	Valve Size	Pres. Adj. Range MPa (PSI)	Design Number	Design Standard
F: Special Seals for Phosphate Ester Type Fluids (Omit if not required)	**MBP** : Relief Valve for P-Line **MBA** : Relief Valve for A-Line **MBB** : Relief Valve for B-Line	**01**	**C**: ∗-14 ★1 (∗-2030) **H**: 7-21 (1020-3050)	**30**	Refer to ★2

★1. See the "Minimum Adjustment Pressure" of the next page for the item marked ∗.
★2. Design Standards: None ..... Japanese Standard "JIS", European Design Standard and N. American Design Standard

Instructions

- The minimum adjustment pressure equals the value obtained from the minimum adjustment pressure characteristics plus the tank line back pressure of the next page. This back pressure should include the value of the T-line pressure drop characteristics of the valves stacked to the base plate side of the modular valve.
- To make pressure adjustment, loosen the lock nut and turn the pressure adjustment screw clockwise or anti-clockwise. For an increase of pressure, turn the screw clockwise. Be sure to re-tighten the lock nut firmly after making adjustment to the pressure.
- In case of a small flow, the setting pressure may become unstable. To avoid this, refer to the minimum flow characteristic curve of the next page and use the valve within a range as shown with .

Graphic Symbols

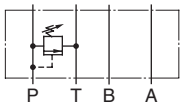

MBP-01

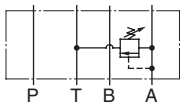

MBA-01

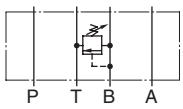

MBB-01

Typical Performance Characteristics

Hydraulic Fluid: Viscosity 35 mm^2/s (164 SSU), Specific Gravity 0.850

Pressure Drop

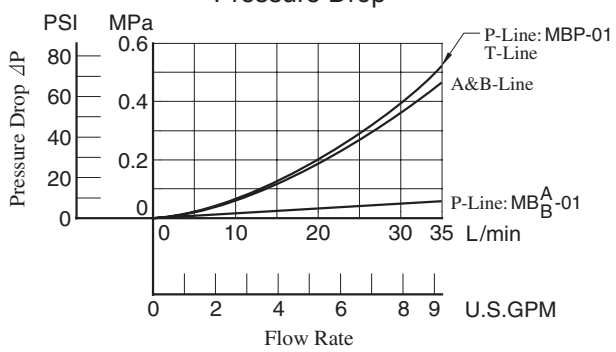

Minimum Flow

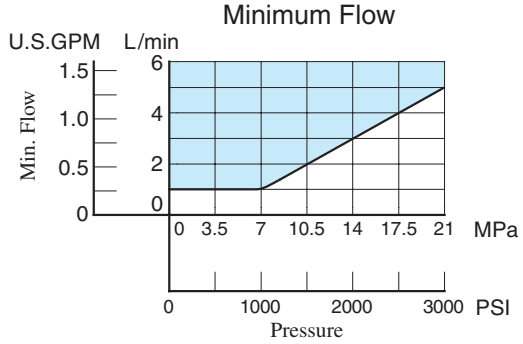

Min. Adjustment Pressure

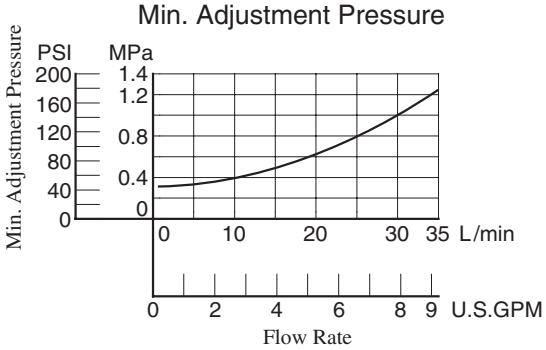

Nominal Override Characteristics

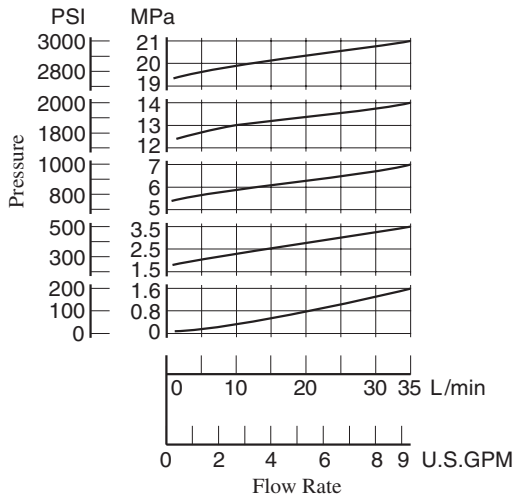

MBP-01-∗-30
MBB-01-∗-30

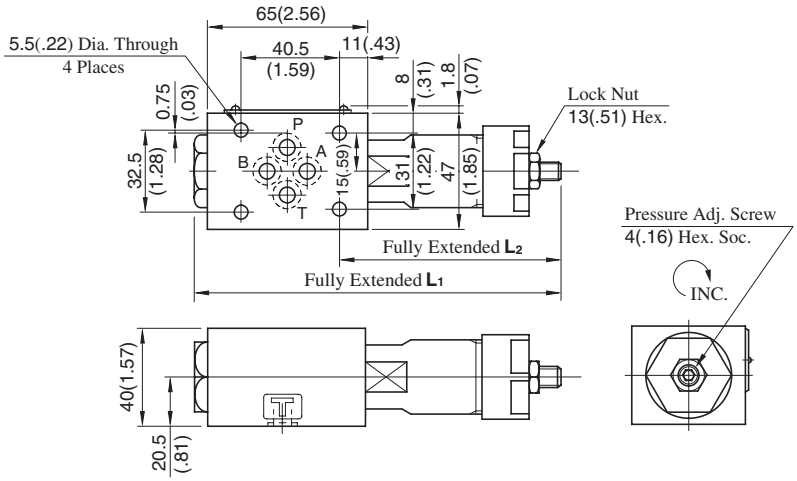

Model No.	L1	L2
MB∗-01-C	151 (5.94)	92 (3.62)
MB∗-01-H	166.5 (6.56)	107.5 (4.23)

Approx. Mass.....1.1 kg (2.4 lbs.)

DIMENSIONS IN MILLIMETRES (INCHES)

MBA-01-∗-30

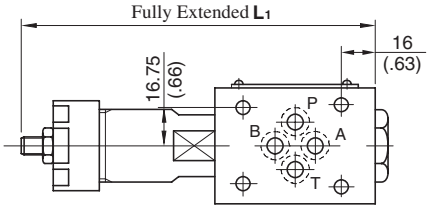

Approx. Mass.....1.1 kg (2.4 lbs.)

- For other dimensions, refer to above (MBP-01) drawing.

Spare Parts List

MBP-01-∗-30

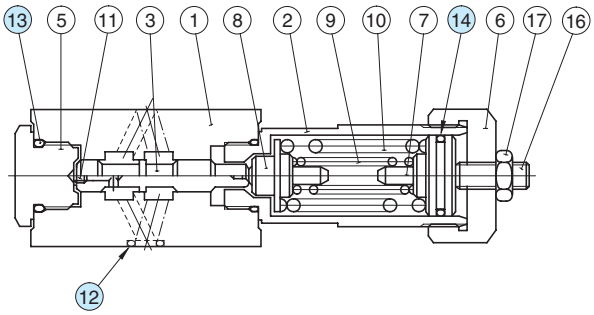

MBA-01-∗-30

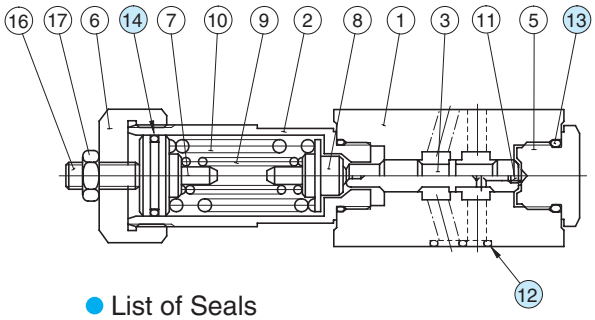

MBB-01-∗-30

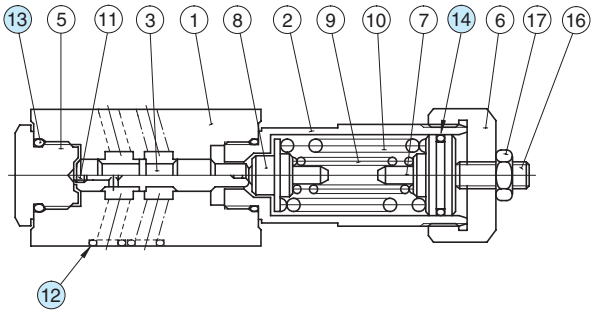

List of Seals

Item	Name of Parts	Part Numbers	Qty.
12	O-Ring	SO-NB-P9	4
13	O-Ring	SO-NB-P18	2
14	O-Ring	SO-NA-P20	1

Note: When ordering seals, please specify the seal kit number from the table below.

List of Seal Kit

Valve Model No.	Seal kit No.
MBP-01	KS-MBP-01-30
MBA-01	
MBB-01	

Reducing Modular Valves

Specifications

Model Numbers	Max. Operating Pressure MPa(PSI)	Max. Flow L/min (U.S.GPM)
MRP-01-∗-30/3090 MRA-01-∗-30/3090 MRB-01-∗-30/3090	31.5 (4570)	35 (9.25) ★

★ If the pressure is set below 1.9 MPa (280 PSI), the maximum flow is limited. See the minimum adjustment pressure vs. maximum flow characteristics and during use, stay within the shaded zone on the graph.

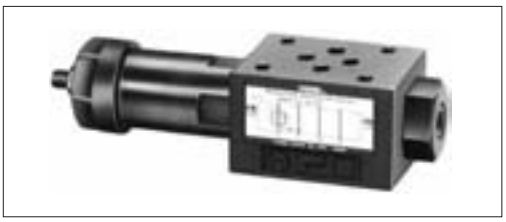

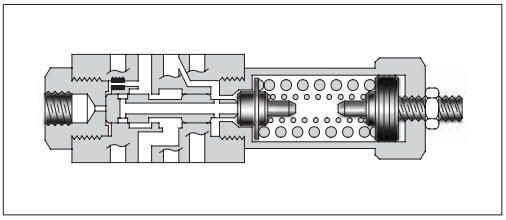

Model Number Designation

F-	MRP	-01	-B	-30	∗
Special Seals	Series Number	Valve Size	Pres. Adj. Range MPa (PSI)	Design Number	Design Standard
F: Special Seals for Phosphate Ester Type Fluids (Omit if not required)	**MRP**: Reducing Valve for P-Line **MRA**: Reducing Valve for A-Line **MRB**: Reducing Valve for B-Line	**01**	**B**: ∗-7 (∗-1020) ★1 **C**: 3.5-14 (510-2030) **H**: 7-21 (1020-3050)	**30**	Refer to ★2

★ 1. See the "Minimum Adjustment Pressure vs. Maximum Flow" of the next page for the item marked ∗.
★ 2. Design Standards: None ..... Japanese Standard "JIS" and European Design Standard
90 ..... N. American Design Standard

Instructions

- The minimum adjustment pressure equals the value obtained from the minimum adjustment pressure characteristics plus the tank line back pressure of the next page. This back pressure should include the value of the T-line pressure drop characteristics of the valves stacked to the base plate side of the modular valve.
- To make pressure adjustment, loosen the lock nut and turn the pressure adjustment screw clockwise or anti-clockwise. For an increase of pressure, turn the screw clockwise. Be sure to re-tighten the lock nut firmly after making adjustment to the pressure.

Graphic Symbols

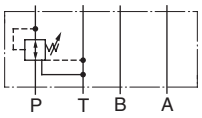

MRP-01

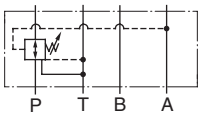

MRA-01

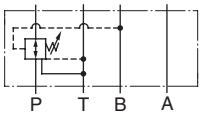

MRB-01

Typical Performance Characteristics

Hydraulic Fluid: Viscosity 35 mm^2/s (164 SSU), Specific Gravity 0.850

Pressure Drop

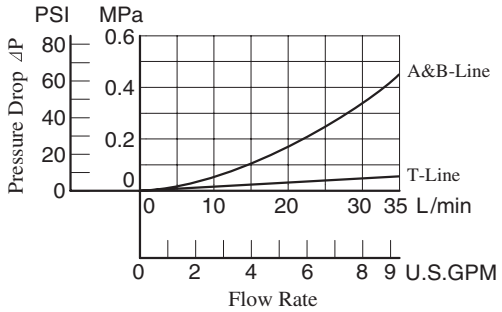

Nominal Override Characteristics

Primary Pressure 25 MPa(3630 PSI)

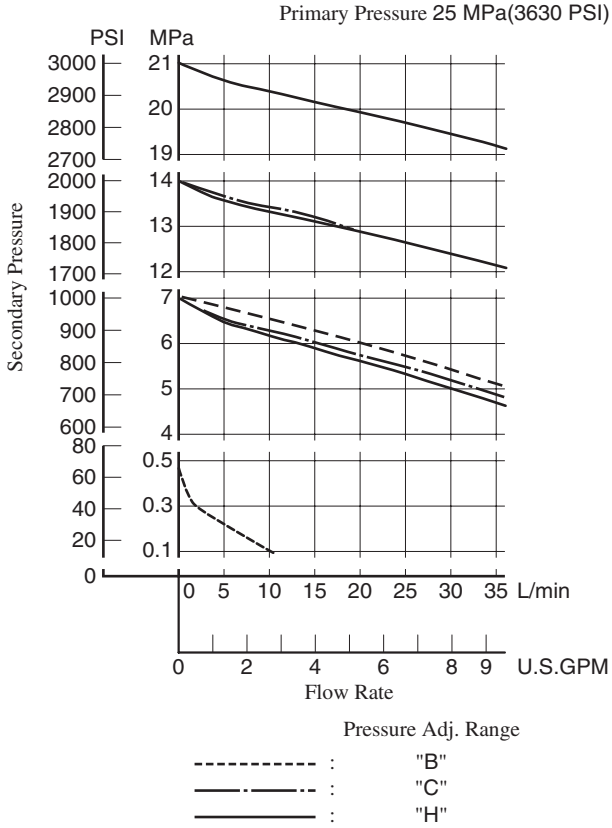

Pres. Drop at Spool Fully Open (P-Line)

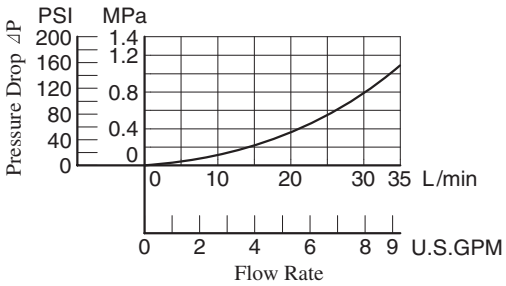

Min. Adjustment Pressure vs. Max. Flow

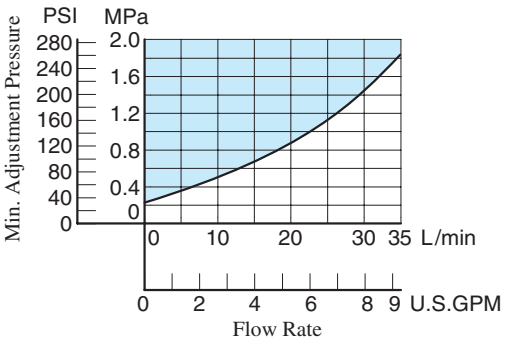

MRP-01-∗-30/3090
MRA-01-∗-30/3090
MRB-01-∗-30/3090

DIMENSIONS IN MILLIMETRES (INCHES)

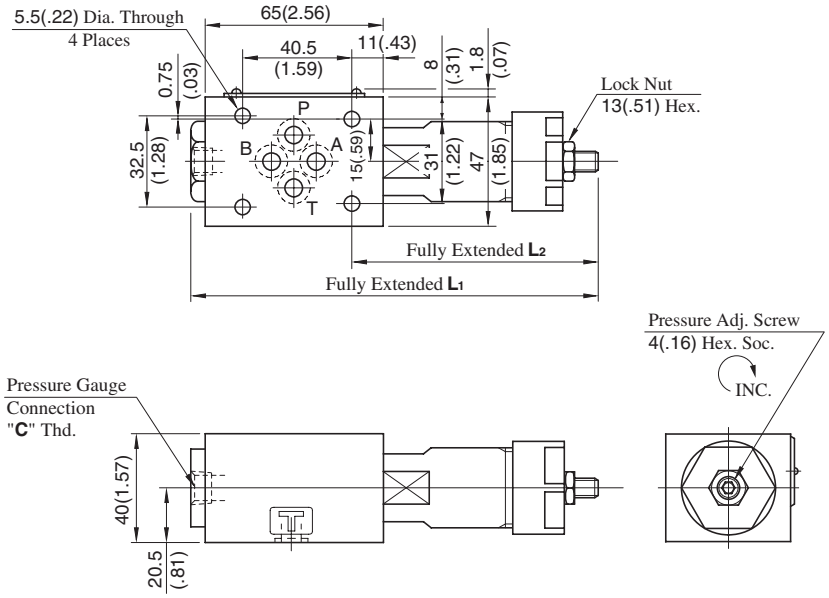

Model No.	L1	L2
MR∗-01-B/C	158 (6.22)	92 (3.62)
MR∗-01-H	173.5 (6.83)	107.5 (4.23)

Model Numbers	Thread Size "C" Thd.
MR∗-01-∗-30	Rc 1/4 = 1/4 BSP.Tr
MR∗-01-∗-3090	1/4 NPT

Approx. Mass.....1.1 kg (2.4 lbs.)

Spare Parts List

MRP-01-∗-30/3090
MRA-01-∗-30/3090
MRB-01-∗-30/3090

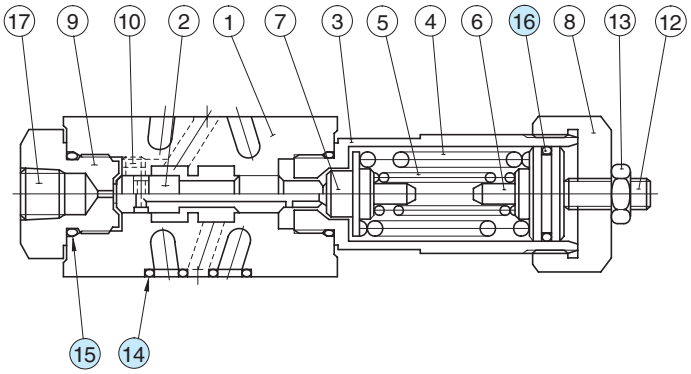

List of Seals

Item	Name of Parts	Part Numbers	Qty.	Remarks
14	O-Ring	SO-NB-P9	4	Included in Seal Kit Kit No.: KS-MBP-01-30
15	O-Ring	SO-NB-P18	2	
16	O-Ring	SO-NA-P20	1	

Brake Modular Valves

Specifications

Model Numbers	Max. Operating Pressure MPa (PSI)	Max. Flow L/min (U.S.GPM)
MBR-01-∗-30	25 (3630)	35 (9.25)

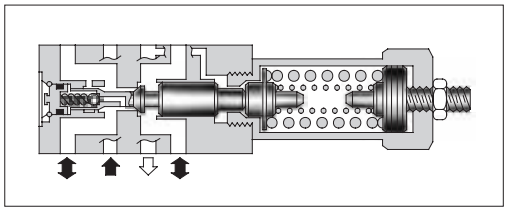

Model Number Designation

F-	MBR	-01	-C	-30	∗
Special Seals	Series Number	Valve Size	Pres. Adj. Range MPa (PSI)	Design Number	Design Standard
F: Special Seals for Phosphate Ester Type Fluids (Omit if not required)	**MBR**: Brake Valve	**01**	**C**: ∗-14 ★1 (∗-2030) **H**: 7-21 (1020-3050)	**30**	Refer to ★2

★1. See the "Minimum Adjustment Pressure "for the item marked ∗.
★2. Design Standards: None ..... Japanese Standard "JIS", European Design Standard and N. American Design Standard

Typical Performance Characteristics

Hydraulic Fluid: Viscosity 35 mm^2/s (164 SSU), Specific Gravity 0.850

Pressure Drop

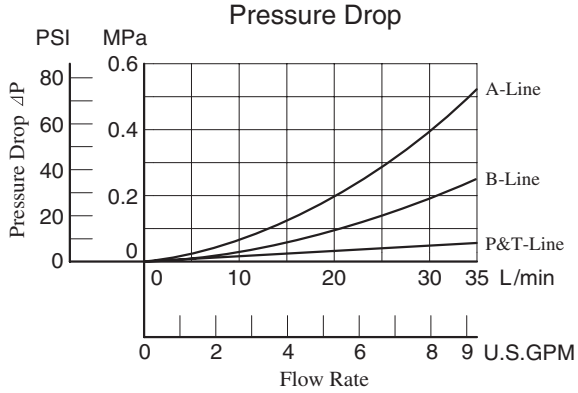

Min. Adjustment Pressure

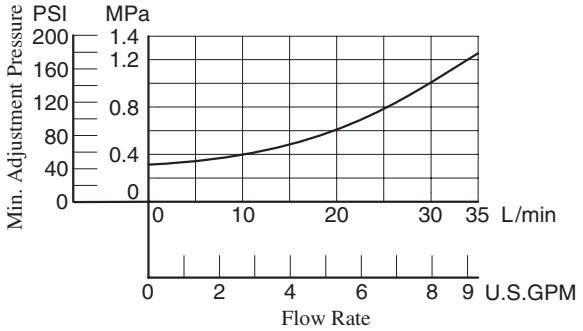

Graphic Symbol

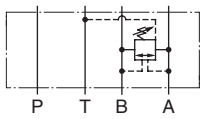

Instructions

- The minimum adjustment pressure equals the value obtained from the minimum adjustment pressure characteristics plus the tank line back pressure of the left. This back pressure should include the value of the T-line pressure drop characteristics of the valves stacked to the base plate side of the modular valve.
- To make pressure adjustment, loosen the lock nut and turn the pressure adjustment screw clockwise or anti-clockwise. For an increase of pressure, turn the screw clockwise. Be sure to re-tighten the lock nut firmly after making adjustment to the pressure.

MBR-01-∗-30

DIMENSIONS IN MILLIMETRES (INCHES)

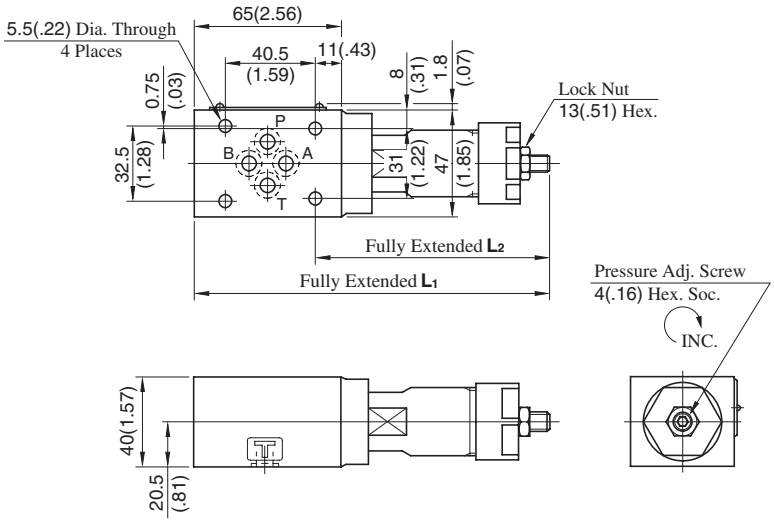

Model No.	L_1	L_2
MBR-01-C	161 (6.34)	107 (4.21)
MBR-01-H	176.5 (6.95)	122.5 (4.82)

Approx. Mass.....1.3 kg (2.9 lbs.)

Spare Parts List

MBR-01-∗-30

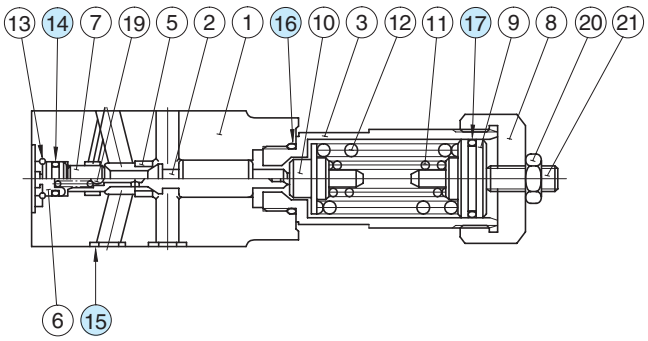

List of Seals

Item	Name of Parts	Part Numbers	Qty.	Remarks
14	O-Ring	SO-NB-P7	1	Included in Seal Kit Kit No.: KS-MBR-01-30
15	O-Ring	SO-NB-P9	4	
16	O-Ring	SO-NB-P18	1	
17	O-Ring	SO-NA-P20	1	

Sequence Modular Valves/Counterbalance Modular Valves

Specifications

Model Numbers	Max. Operating Pressure MPa (PSI)	Max. Flow L/min (U.S.GPM)	Free Flow L/min (U.S.GPM)
MHP-01-∗-30	25 (3630)	35 (9.25)	——
MHA-01-∗-30			35 (9.25)

Graphic Symbols

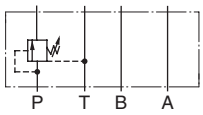

MHP-01

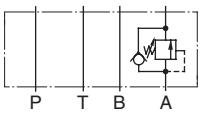

MHA-01

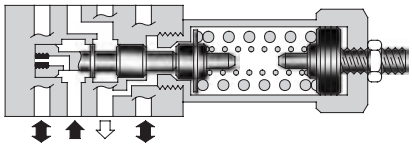

MHP-01

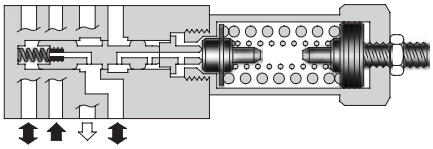

MHA-01

Model Number Designation

F-	MHP	-01	-C	-30	∗
Special Seals	Series Number	Valve Size	Pres. Adj. Range MPa (PSI)	Design Number	Design Standard
F: Special Seals for Phosphate Ester Type Fluids (Omit if not required)	**MHP** : Sequence Valve for P-Line **MHB** : Counterbalance Valve for A-Line	**01**	**C**: ∗-14 ★1 (∗-2030) **H**: 7-21 (1020-3050)	**30**	Refer to ★2

★1. See the "Minimum Adjustment Pressure" of the next page for the item marked ∗.
★2. Design Standards: None ..... Japanese Standard "JIS", European Design Standard and N. American Design Standard

Instructions

- The minimum adjustment pressure (MHP-01) equals the value obtained from the minimum adjustment pressure characteristics plus the tank line back pressure of the next page. This back pressure should include the value of the T-line pressure drop characteristics of the valves stacked to the base plate side of the modular valve.
- To make pressure adjustment, loosen the lock nut and turn the pressure adjustment screw clockwise or anti-clockwise. For an increase of pressure, turn the screw clockwise. Be sure to re-tighten the lock nut firmly after making adjustment to the pressure.
- The minimum adjustment pressure (MHA-01) equals the value obtained from the minimum adjustment pressure characteristics plus the outlet-side back pressure of the valve on the next page. The outlet-side back pressure should include the values of the A-line and T-line pressure drop characteristics of the valves to be stacked due to the valve with internal drain.

Typical Performance Characteristics

Hydraulic Fluid: Viscosity 35 mm^2/s (164 SSU), Specific Gravity 0.850

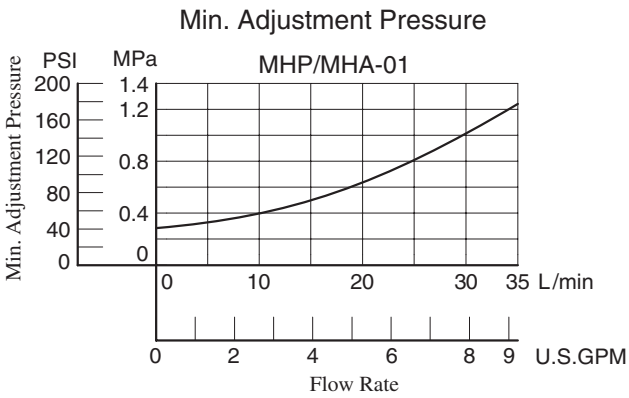

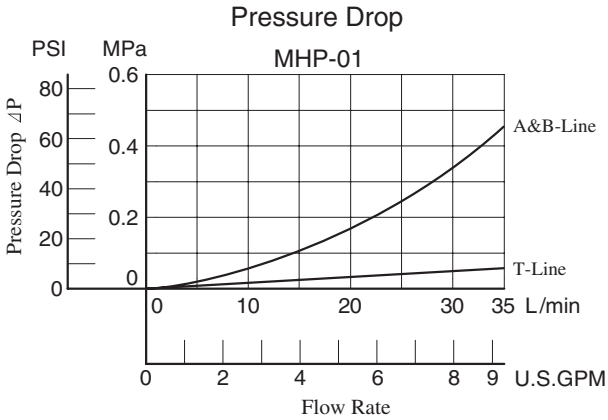

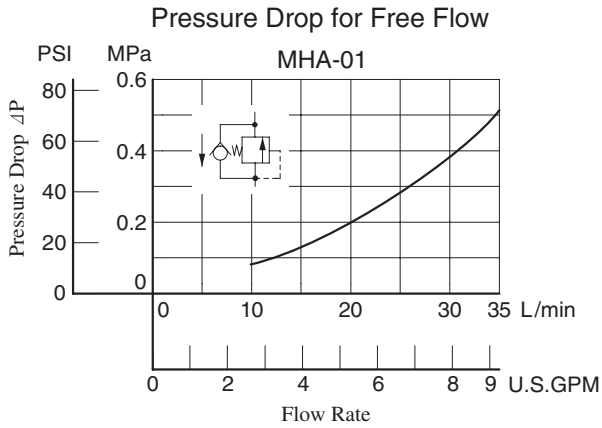

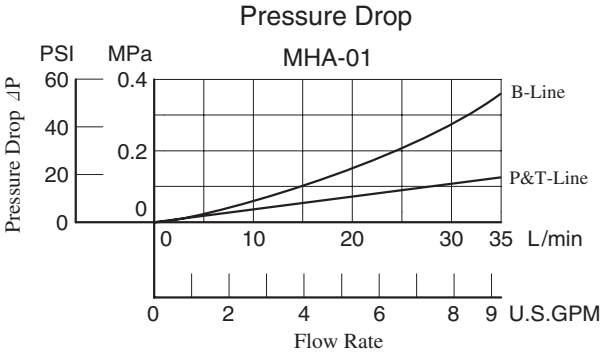

MHP-01-∗-30

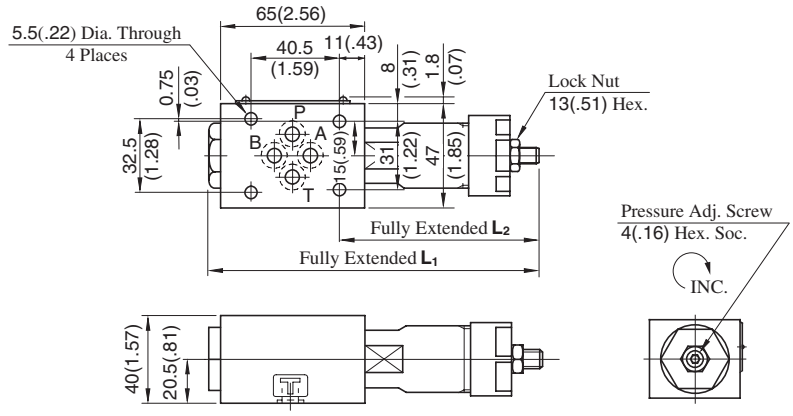

Model Numbers	L1	L2
MHP-01-C	151 (5.94)	92 (3.62)
MHP-01-H	166.5 (6.56)	107.5 (4.23)

Approx. Mass.....1.1 kg (2.4 lbs.)

DIMENSIONS IN MILLIMETRES (INCHES)

MHA-01-∗-30

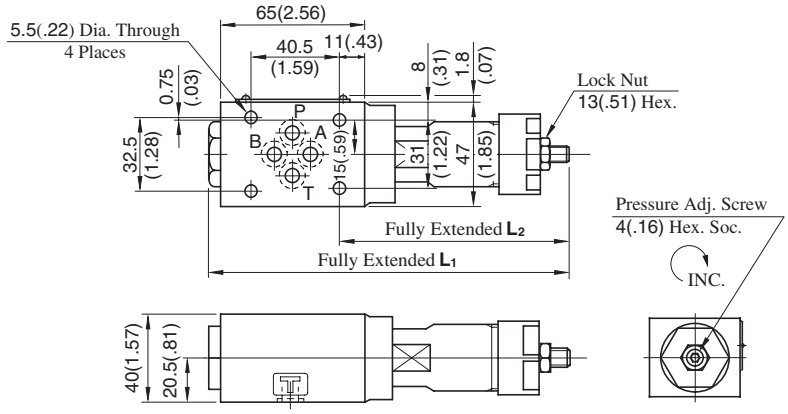

Model Numbers	L1	L2
MHA-01-C	171 (6.73)	112 (4.41)
MHA-01-H	186.5 (7.34)	127.5 (5.02)

Approx. Mass.....1.3 kg (2.9 lbs.)

Spare Parts List

MHP-01-∗-30

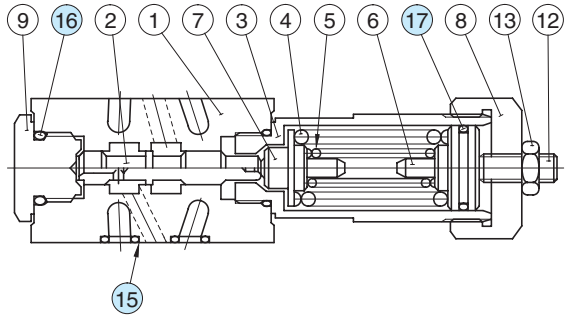

List of Seals

Item	Name of Parts	Part Numbers	Qty.	Remarks
15	O-Ring	SO-NB-P9	4	Included in Seal Kit Kit No.: KS-MBP-01-30
16	O-Ring	SO-NB-P18	2	
17	O-Ring	SO-NA-P20	1	

MHA-01-∗-30

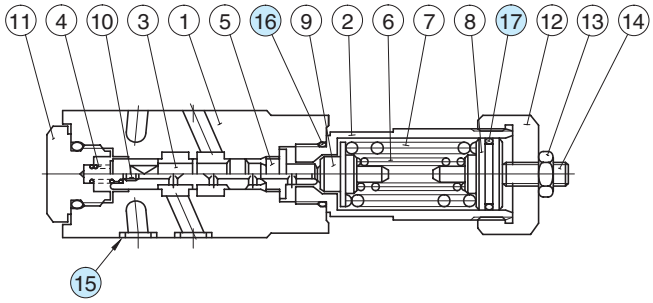

List of Seals

Item	Name of Parts	Part Numbers	Qty.	Remarks
15	O-Ring	SO-NB-P9	4	Included in Seal Kit Kit No.: KS-MHA-01-30
16	O-Ring	SO-NB-P18	2	
17	O-Ring	SO-NB-P20	1	

Pressure Switch Modular Valves

Specifications

Model Numbers	Max. Operating Pressure MPa(PSI)	Max. Flow L/min (U.S.GPM)
MJ∗-01-M-∗-∗-10	31.5 (4570)	35 (9.25)
MJ∗-01-J-35-10	10 (1450)	
MJ∗-01-J-100-10	10 (1450)	
MJ∗-01-J-200-10	20 (2900)	
MJ∗-01-J-350-10	35 (5080)	

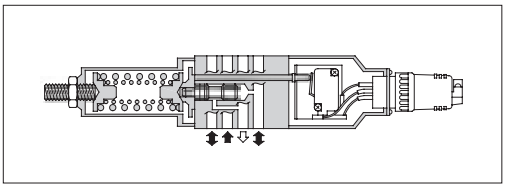

Sensitive Switch Ratings

Electric Source		AC	DC	
Voltage	V	125・250	125	250
Current	A	11A-1/3HP	0.5	0.25

Specifications of semiconductor type pressure switch

JT-02 series is installed for semiconductor type pressure switch, refer to page 272 for details.

Model Number Designation

F-	MJP	-01	-M	-B	-N	-10	∗
Special Seals	Series Number	Valve Size	Type of Switch	Pres. Adj. Range MPa (PSI)	Type of Electrical Connection	Design Number	Design Standard
F: Special Seals for Phosphate Ester Type Fluids (Omit if not required)	**MJP** : Pressure Switch for P-Line **MJA** : Pressure Switch for A-Line **MJB** : Pressure Switch for B-Line	**01**	**M**: Sensitive Switch	**B**: 1-7 (145-1020) **C**: 3.5-14 (510-2030) **H**: 7-21 (1020-3050)	**None**: Cable Connector Type **N**: With Plug-in Connector (DIN)	**10**	Refer to ★
			J: Semi-conductor Type Pressure Switch	**35**: 0.1-3.5 (14.5-510) **100**: 1-10 (145-1450) **200**: 2-20 (290-2900) **350**: 3.5-35 (510-5080)	**None**: Lead Wire Type		

★ Design Standards: None ..... Japanese Standard "JIS", European Design Standard and N. American Design Standard

Graphic Symbols

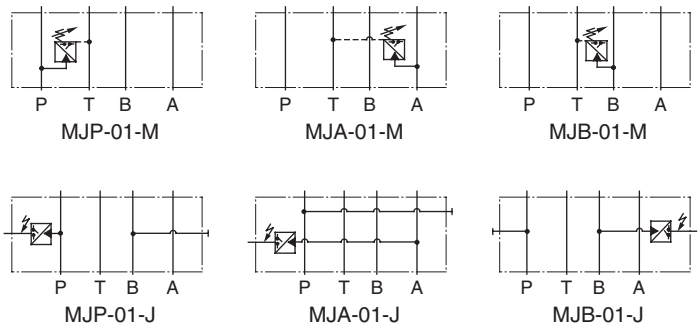

Instructions

- To make pressure adjustment, loosen the lock nut and turn the pressure adjustment screw clockwise or anti-clockwise. For an increase of pressure, turn the screw clockwise. Be sure to re-tighten the lock nut firmly after making adjustment to the pressure.
- Wiring of a sensitive switch should be made correctly referring to the table below. Numbers in the switch status column indicate wiring numbers in receptacles or contact numbers of connectors.

(Pressure with Sensitive Switch and The Switch Status)

Operating Pressure	Switch Status
Less than Pressure setting	1 — 2 / 3
More than Pressure setting	1 — 3 / 2

Attachment

Valve Model No.	Attachment
MJ∗-01-M-∗-10	Cable connector: NJC-203-PR ..... 1 Pc.
MJ∗-01-M-∗-N-10	DIN connector: GDM311-B-11... 1 Pc.

Pressure Drop

Hydraulic Fluid: Viscosity 35 mm^2/s (164 SSU), Specific Gravity 0.850

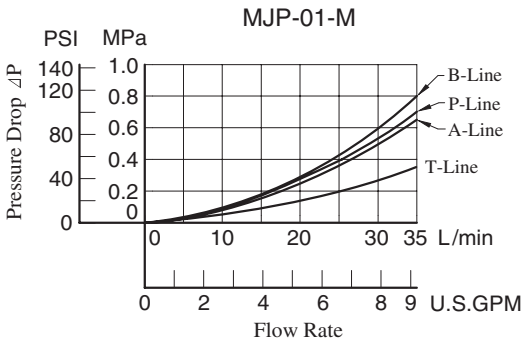

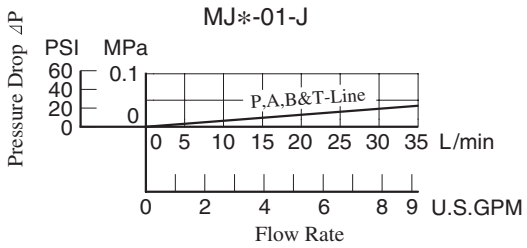

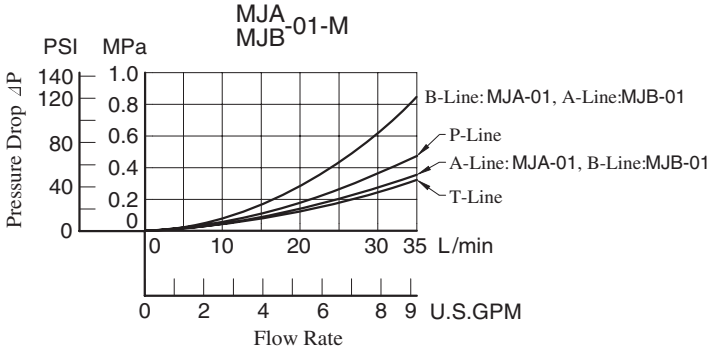

Cable Connector Type

MJP-01-M-∗-10
MJA-01-M-∗-10

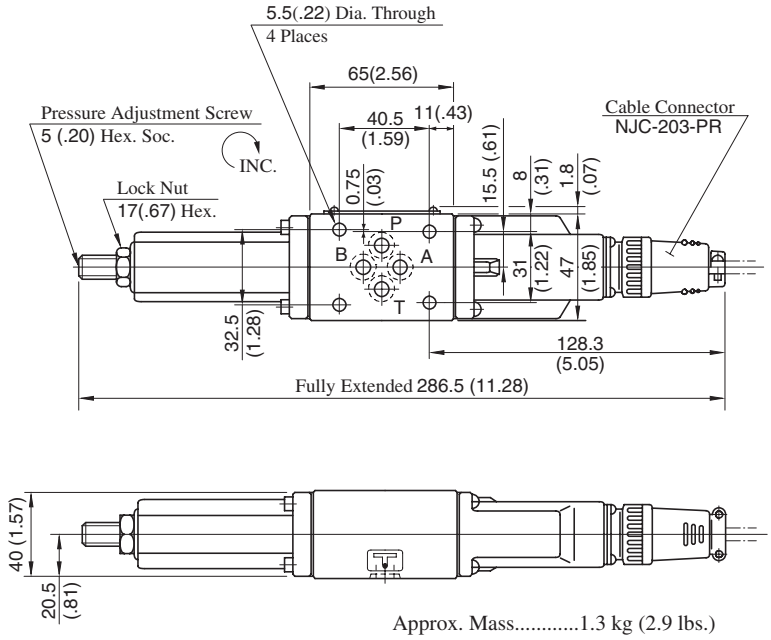

Approx. Mass.....1.3 kg (2.9 lbs.)

MJB-01-M-∗-10

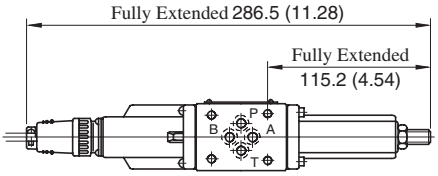

Approx. Mass.....1.3 kg (2.9 lbs.)

- For other dimensions, refer to "MJ$^{P}_{A}$-01" drawing left.

DIMENSIONS IN MILLIMETRES (INCHES)

Plug-in Connector Type

MJP-01-M-∗-N-10
MJA-01-M-∗-N-10

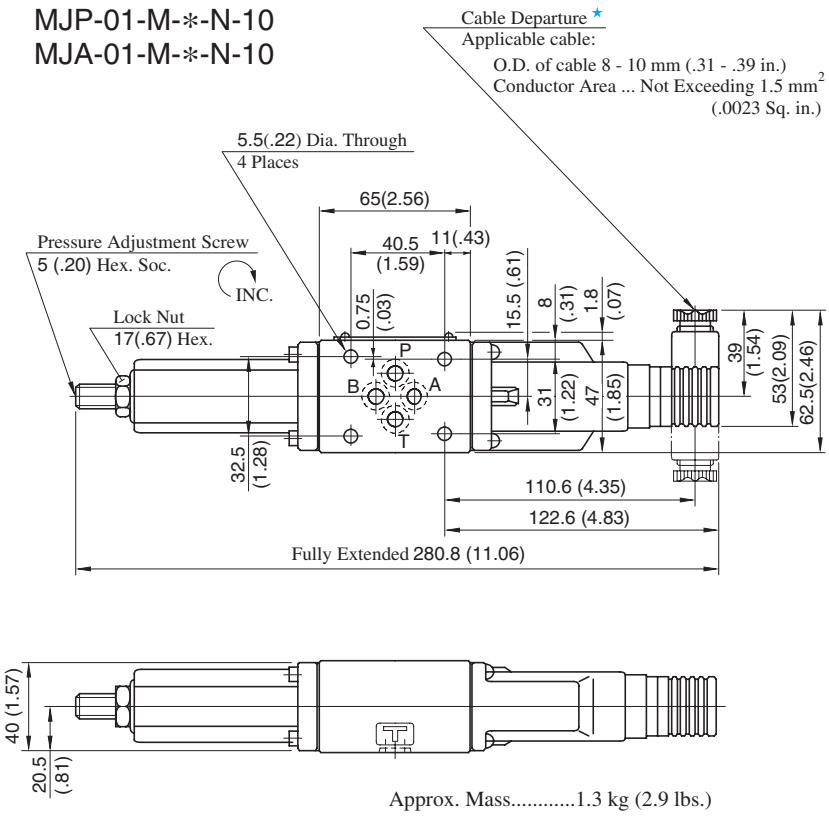

Approx. Mass.....1.3 kg (2.9 lbs.)

★ As shown by the dot-and-dash line, the cable departure can also be faced opposite.

MJB-01-M-∗-N-10

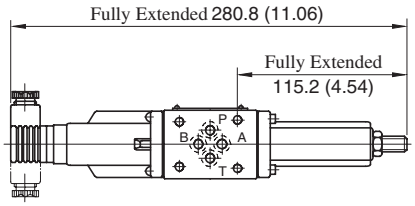

Approx. Mass.....1.3 kg (2.9 lbs.)

- For other dimensions, refer to "MJ$^{P}_{A}$-01" drawing left.

Semiconductor Type Pressure Switch

MJP-01-J-∗-10
MJA-01-J-∗-10

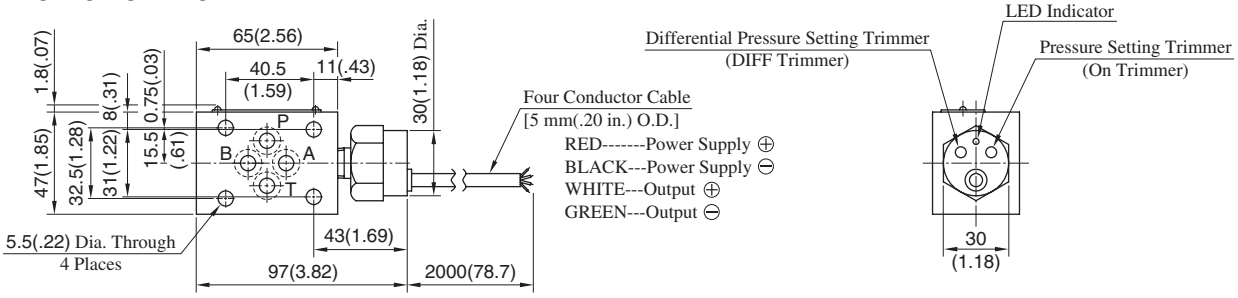

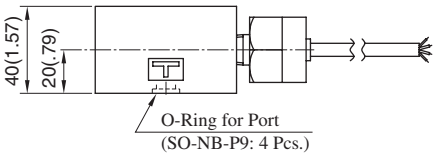

Approx. Mass.....1 kg (2.2 lbs.)

MJB-01-J-∗-10

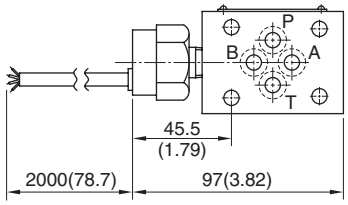

Approx. Mass.....1 kg (2.2 lbs.)

- For other dimensions, refer to "MJ$^{P}_{A}$-01" drawing left.

Spare Parts List

Plug-in Connector Type

MJP
MJA-01-M-∗-N-10
MJB

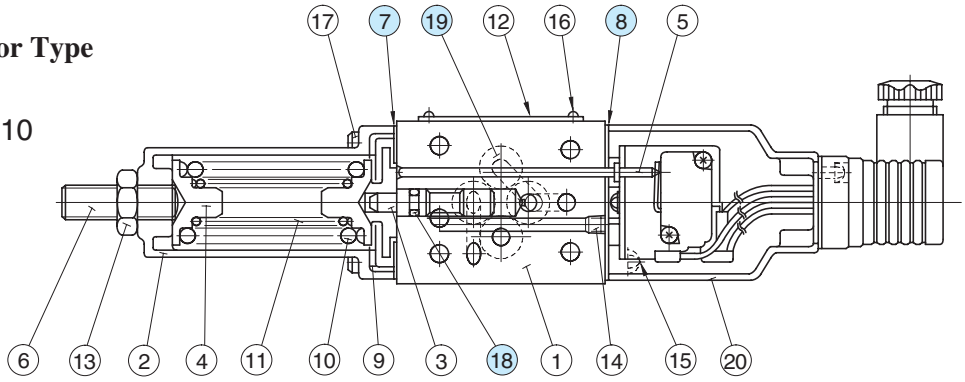

Cable Connector Type

MJP
MJA-01-M-∗-10
MJB

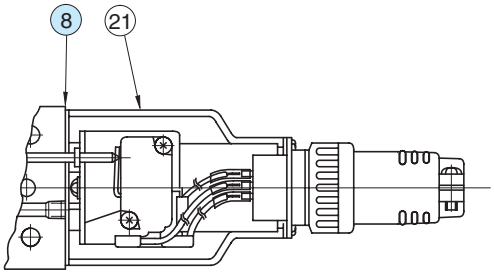

List of Seals

Item	Name of Parts	Part Numbers	Qty.
7	Packing	3116-VK414239-4	1
8	Packing	3116-VK414240-2	1
18	O-Ring	SO-NA-P5	1
19	O-Ring	SO-NB-P9	4

Note: When ordering seals, please specify the seal kit number from the table below.

List of Seal Kits

Valve Model No.	Seal Kit Numbers
MJP-01	Included in seal kit Kit No.: KS-MJP-01-10
MJA-01	
MJB-01	

- Since MJ∗-01-J-∗-10 (Semiconductor type pressure switch) does not have any seals inside, only four(4) O-rings for the ports are required. Please refer to the above drawing.

Pressure and Temperature Compensated Flow Control (and Check) Modular Valves

Specifications

Model Numbers	Max. Operating Pressure MPa (PSI)	Max. Metred Flow L/min (U.S.GPM)	Max. Free Flow L/min (U.S.GPM)
MFP-01-10	16 (2320)	35 (9.25)	——
MFA-01-∗-10 MFB-01-∗-10 MFW-01-∗-10			35 (9.25)

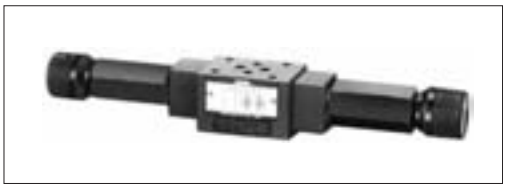

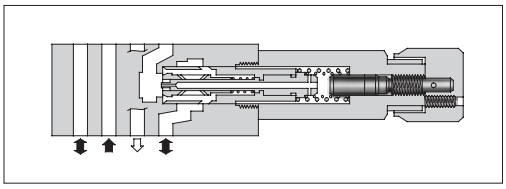

Model Number Designation

F-	MFA	-01	-X	-10	
Special Seals	Series Number	Valve Size	Direction of Flow	Design Number	Design Standard
F: Special Seals for Phosphate Ester Type Fluids (Omit if not required)	**MFP** : Flow Control Valve for P-Line	**01**	——	**10**	Refer to ★
	MFA : Flow Control and Check Valve for A-Line **MFB** : Flow Control and Check Valve for B-Line **MFW** : Flow Control and Check Valve for A&B-Lines		**X**: Metre-out **Y**: Metre-in	**10**	

★ Design Standards: None ..... Japanese Standard "JIS", European Design Standard and N. American Design Standard

Instructions

- To make flow rate adjustment, loosen locking screw for the dial and turn the flow adjustment dial clockwise or anti-clockwise. For a decrease of flow, turn the dial clockwise. Be sure to re-tighten the locking screw firmly after the adjustment of the flow rate.

Graphic Symbols

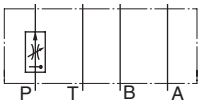

MFP-01

Metre-out	Metre-in
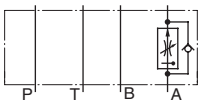 MFA-01-X	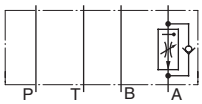 MFA-01-Y
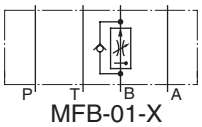 MFB-01-X	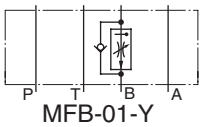 MFB-01-Y
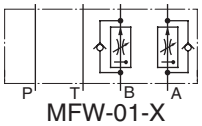 MFW-01-X	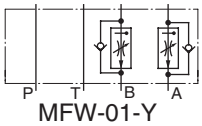 MFW-01-Y

Typical Performance Characteristics

Hydraulic Fluid: Viscosity 35 mm^2/s (164 SSU), Specific Gravity 0.850

Min. Required Pressure Difference

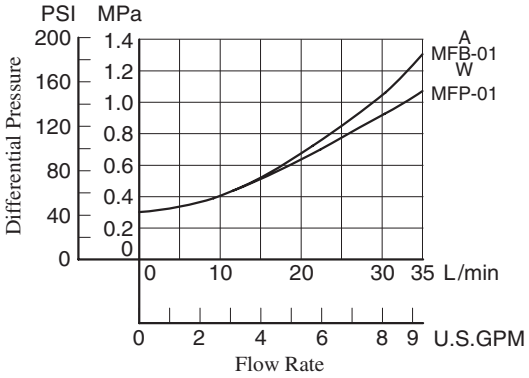

Metred Flows vs. Dial Position

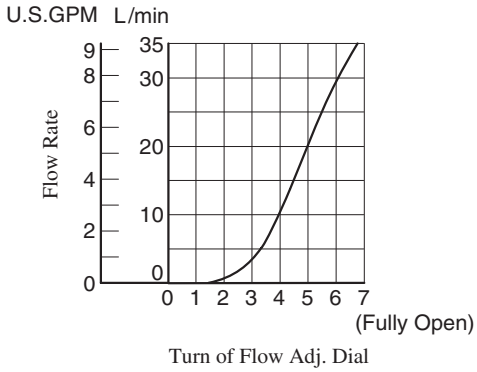

Min. Metred Flow

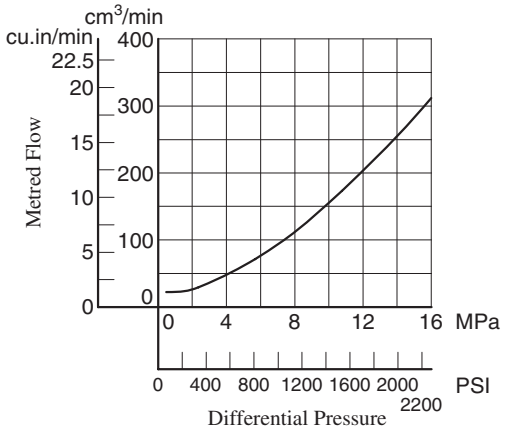

Metred Flow vs. Viscosity

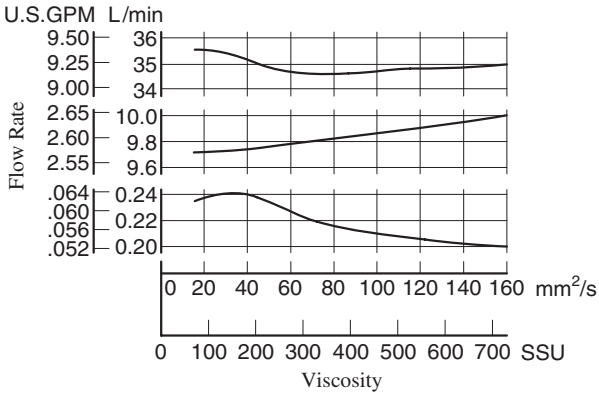

Pressure Drop

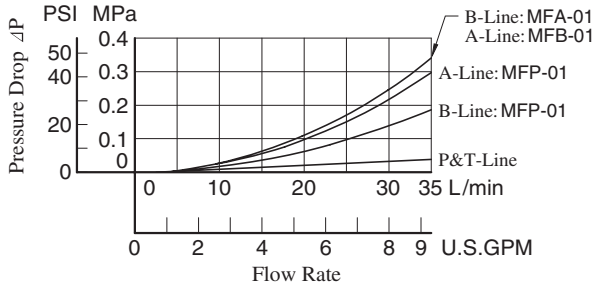

Metred Flow vs. Differential Pres.

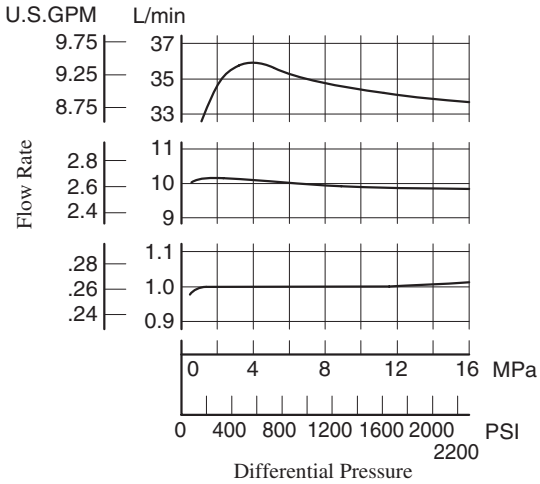

Pressure Drop for Free Flow

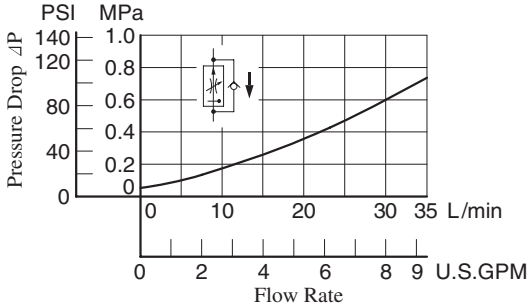

MFP-01-10

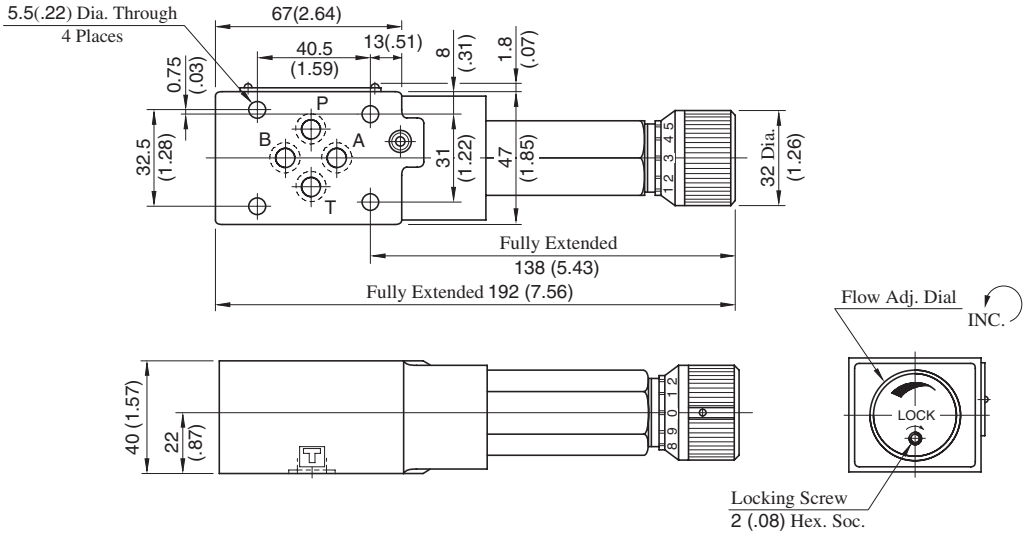

Approx. Mass..... 1.7 kg (3.8 lbs.)

MFW-01-$^{X}_{Y}$-10

DIMENSIONS IN MILLIMETRES (INCHES)

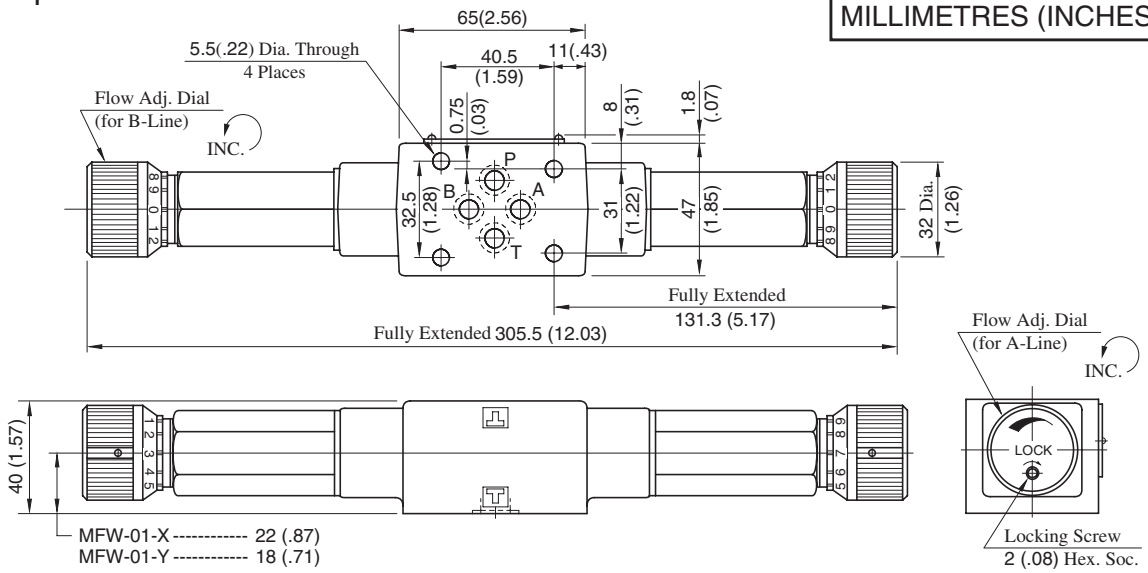

Approx. Mass..... 2.1 kg (4.6 lbs.)

MFA-01-$^{X}_{Y}$-10

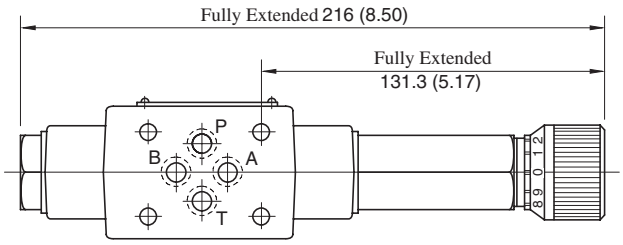

Approx. Mass..... 1.6 kg (3.5 lbs.)

MFB-01-$^{X}_{Y}$-10

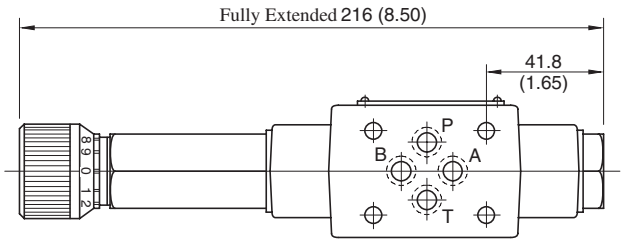

Approx. Mass..... 1.6 kg (3.5 lbs.)

• For other dimensions, refer to "MFW-01" drawing above.

Spare Parts List

MFP-01-10

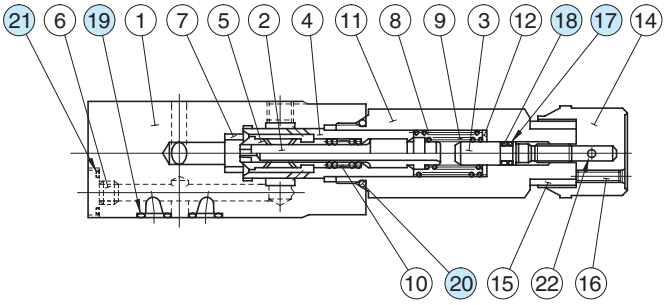

MFW-01-X/Y-10

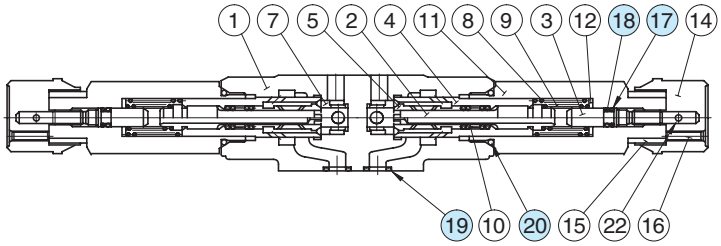

MFA-01-X/Y-10

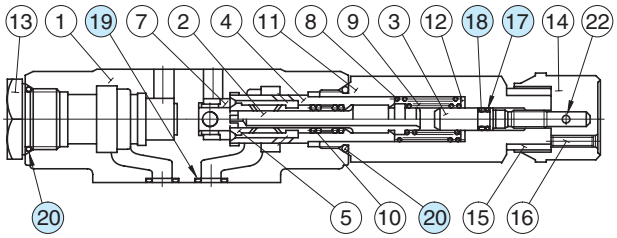

MFB-01-X/Y-10

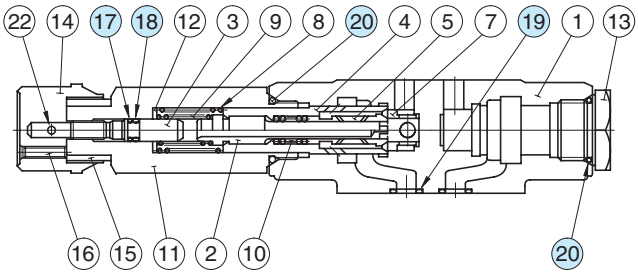

List of Seals

Item	Name of Parts	Part Numbers	Quantity			
			MFP-01	MFA-01	MFB-01	MFW-01
17	Back Up Ring	SO-BB-P6	1	1	1	2
18	O-Ring	SO-NA-P6	1	1	1	2
19	O-Ring	SO-NB-P9	4	4	4	4
20	O-Ring	SO-NB-P18	1	2	2	2
21	O-Ring	SO-NB-P10	1	—	—	—

Note: When ordering seals, please specify the seal kit number from the table right.

List of Seal Kits

Valve Model Numbers	Seal Kit Numbers
MFP-01	KS-MFP-01-10
MFA-01	KS-MFA-01-10
MFB-01	
MFW-01	KS-MFW-01-10

Temperature Compensated Throttle and Check Modular Valves

Specifications

Model Numbers	Max. Operating Pressure MPa (PSI)	Max. Differential Pressure MPa (PSI)	Max. Metred Flow L/min (U.S.GPM)	Min. Metred Flow L/min (U.S.GPM)	Max. Free Flow L/min (U.S.GPM)
MSTA-01-X-10 MSTB-01-X-10 MSTW-01-X-10	31.5 (4570)	14 (2030)	35 (9.25)	0.5 (.13)	35 (9.25)

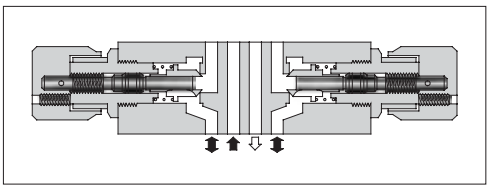

Model Number Designation

F-	MSTA	-01	-X	-10	*
Special Seals	Series Number	Valve Size	Direction of Flow	Design Number	Design Standard
F: Special Seals for Phosphate Ester Type Fluids (Omit if not required)	**MSTA** : Temperature Compensated Throttle and Check Valve for A-Line **MSTB** : Temperature Compensated Throttle and Check Valve for B-Line **MSTW**: Temperature Compensated Throttle and Check Valve for A&B-Lines	**01**	**X**: Metre-out	**10**	Refer to ★

★ Design Standards: None ..... Japanese Standard "JIS", European Design Standard and N. American Design Standard

Instructions

- To make flow rate adjustment, loosen locking screw for the dial and turn the flow adjustment dial clockwise or anti-clockwise. For a decrease of flow, turn the dial clockwise. Be sure to re-tighten the locking screw firmly after the adjustment of the flow rate.

Graphic Symbols

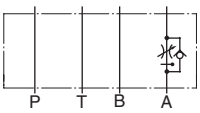

MSTA-01-X

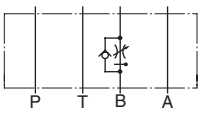

MSTB-01-X

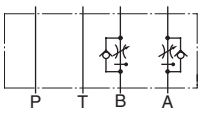

MSTW-01-X

Typical Performance Characteristics

Hydraulic Fluid: Viscosity 35 mm^2/s (164 SSU), Specific Gravity 0.850

Pressure Drop

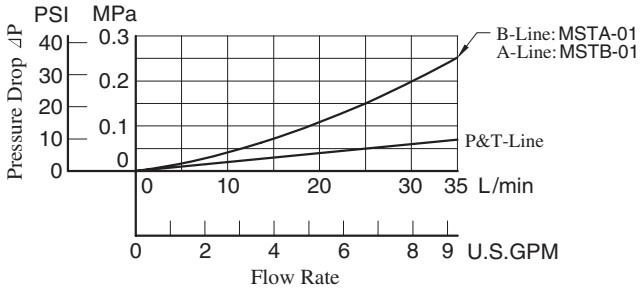

Pressure Drop at Throttle Fully Open

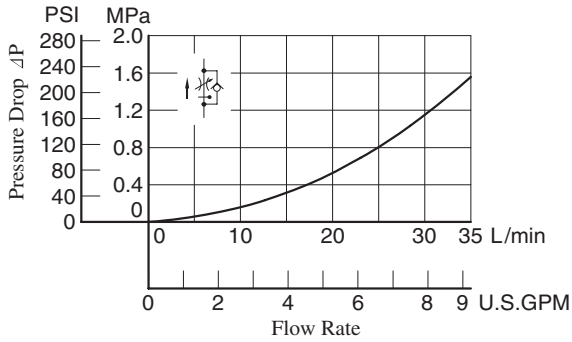

Pressure Drop for Free Flow

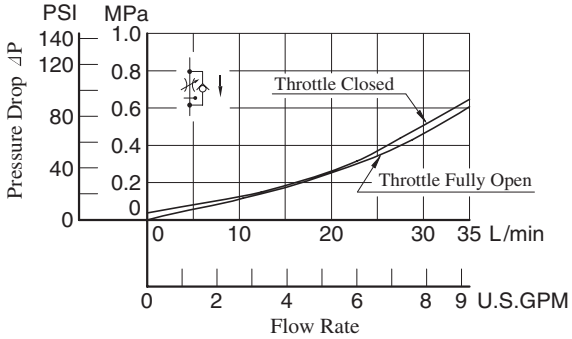

Metred Flow vs. Viscosity

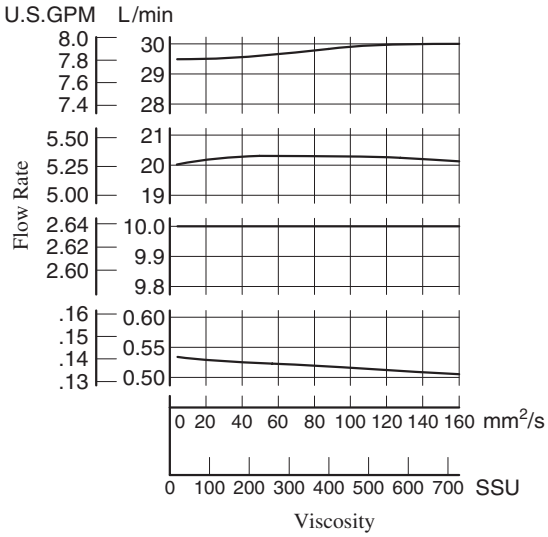

Metred Flow vs. Dial Position

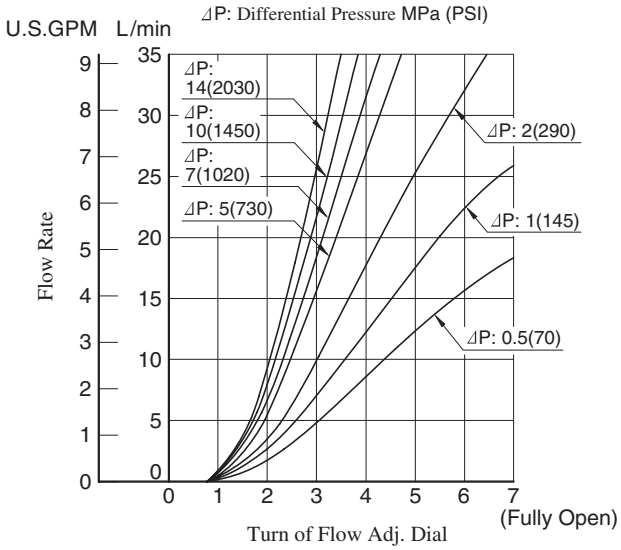

MSTW-01-X-10

DIMENSIONS IN MILLIMETRES (INCHES)

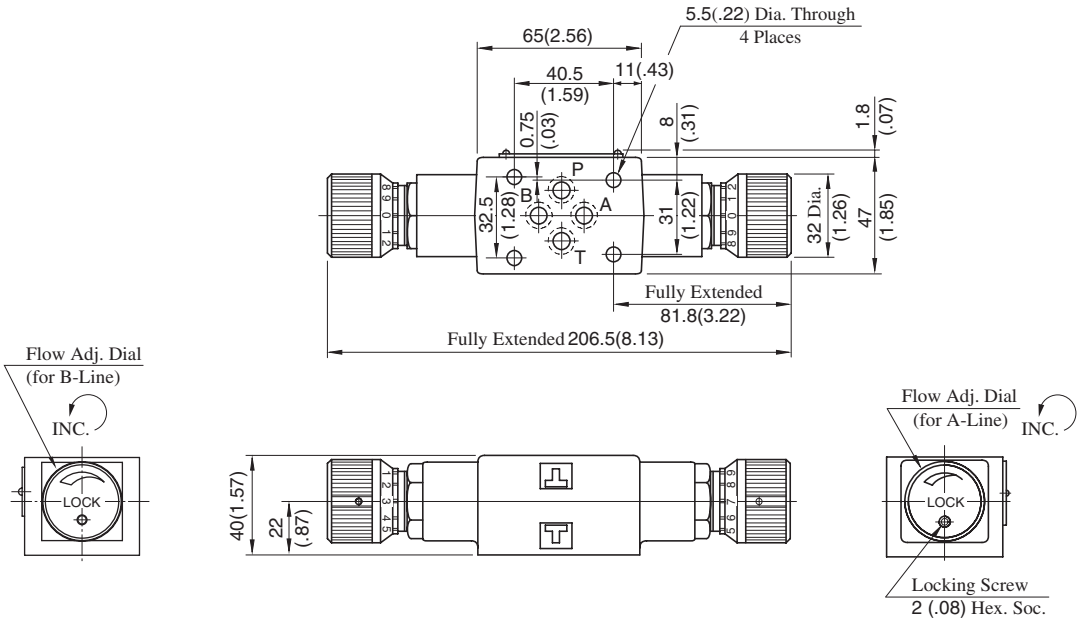

Approx. Mass..... 1.5 kg (3.3 lbs.)

MSTA-01-X-10

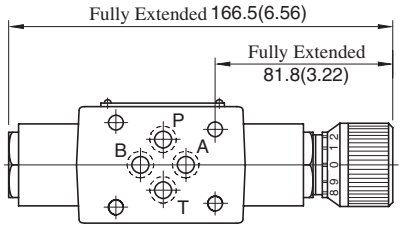

Approx. Mass..... 1.3 kg (2.9 lbs.)

MSTB-01-X-10

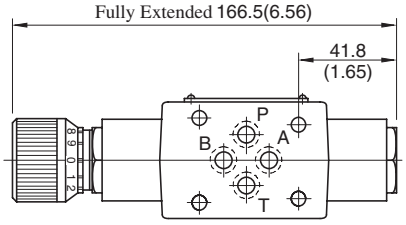

Approx. Mass..... 1.3 kg (2.9 lbs.)

- For other dimensions, refer to "MSTW-01" drawing above.

Spare Parts List

MSTA-01-X-10

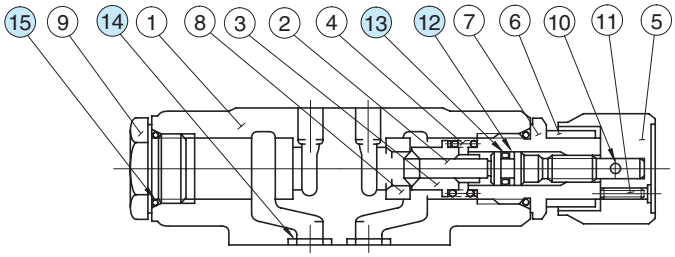

MSTB-01-X-10

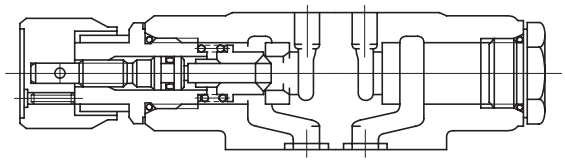

MSTW-01-X-10

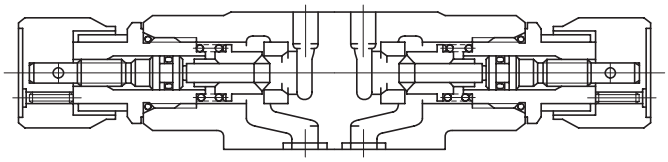

List of Seals

Item	Name of Parts	Part Numbers	Quantity		
			MSTA	MSTB	MSTW
12	Back Up Ring	SO-BB-P6	1	1	2
13	O-Ring	SO-NA-P6	1	1	2
14	O-Ring	SO-NB-P9	4	4	4
15	O-Ring	SO-NB-P18	2	2	2

Note: When ordering seals, please specify the seal kit number from the table right.

List of Seal Kits

Valve Model Numbers	Seal Kit Numbers
MSTA-01	KS-MFA-01-10
MSTB-01	
MSTW-01	KS-MFW-01-10

Throttle Modular Valves

Specifications

Model Number	Max. Operating Pressure MPa (PSI)	Max. Flow L/min (U.S.GPM)
MSP-01-50	31.5 (4570)	60 (15.9) ★

★ At the low differential pressure, maximum flow is limited. See "Pressure Drop at Throttle Fully Open".

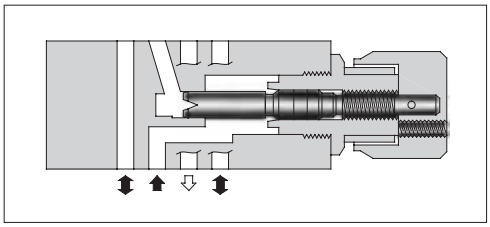

Model Number Designation

F-	MSP	-01	-50	*
Special Seals	Series Number	Valve Size	Design Number	Design Standard
F: Special Seals for Phosphate Ester Type Fluids (Omit if not required)	**MSP** : Throttle Valve for P-Line	**01**	**50**	Refer to ★

★ Design Standards: None ..... Japanese Standard "JIS", European Design Standard and N. American Design Standard

Graphic Symbol

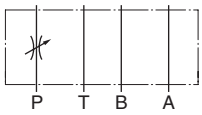

Typical Performance Characteristics

Hydraulic Fluid: Viscosity 35 mm^2/s (164 SSU), Specific Gravity 0.850

Pressure Drop at Throttle Fully Open

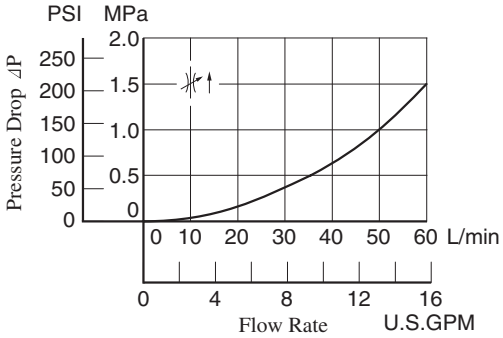

Pressure Drop

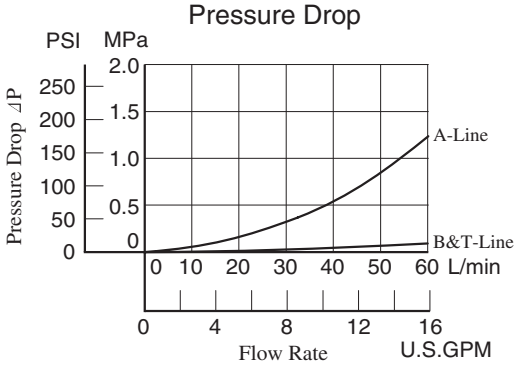

Metred Flow vs. Dial Position

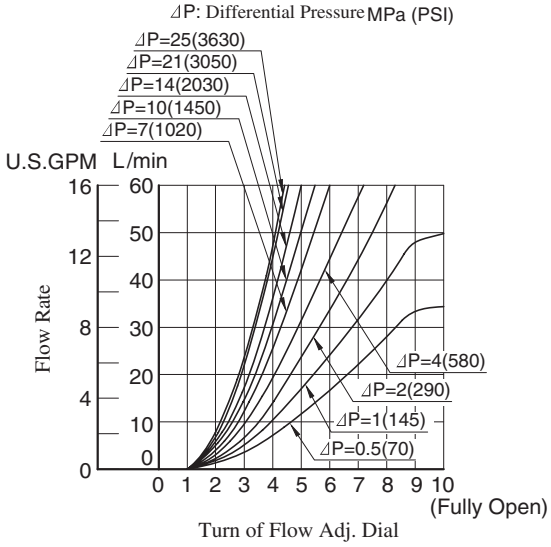

Instructions

- To make flow rate adjustment, loosen locking screw for the dial and turn the flow adjustment dial clockwise or anti-clockwise. For a decrease of flow, turn the dial clockwise. Be sure to re-tighten the locking screw firmly after the adjustment of the flow rate.

MSP-01-50

DIMENSIONS IN MILLIMETRES (INCHES)

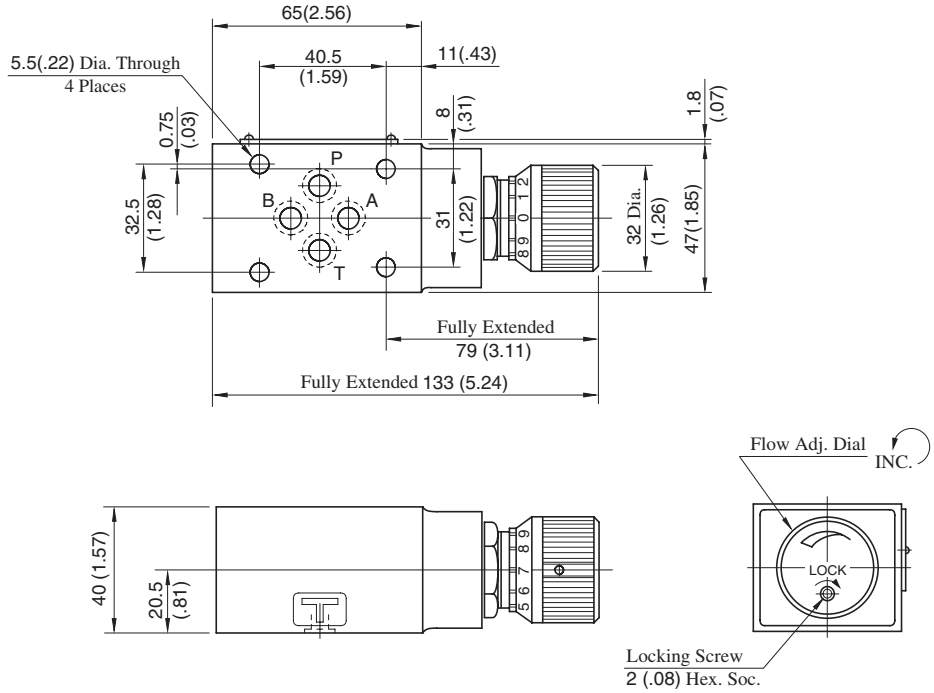

Approx. Mass..... 1.2 kg (2.6 lbs.)

Spare Parts List

MSP-01-50

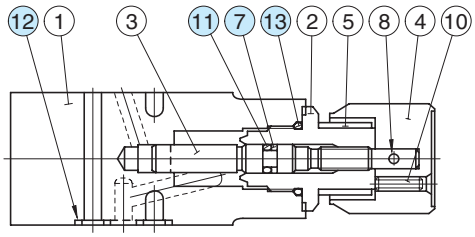

List of Seals

Item	Name of Parts	Part Numbers	Qty.	Remarks
7	Back Up Ring	SO-BB-P6	1	Included in Seal Kit Kit No.: KS-MSP-01-50
11	O-Ring	SO-NA-P6	1	
12	O-Ring	SO-NB-P9	4	
13	O-Ring	SO-NB-P18	1	

Check and Throttle Modular Valves

Specifications

Model Number	Max. Operating Pressure MPa (PSI)	Max. Flow L/min (U.S.GPM)
MSCP-01-30	31.5 (4570)	35 (9.25)★

★ At the low differential pressure, maximum flow is limited. See "Pressure Drop at Throttle Fully Open".

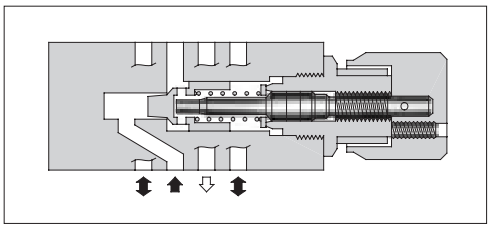

Model Number Designation

F-	MSCP	-01	-30	✻
Special Seals	Series Number	Valve Size	Design Number	Design Standard
F: Special Seals for Phosphate Ester Type Fluids (Omit if not required)	**MSCP** : Check and Throttle Valve for P-Line	**01**	**30**	Refer to ★

★ Design Standards: None ..... Japanese Standard "JIS", European Design Standard and N. American Design Standard

Graphic Symbol

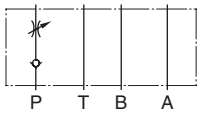

Typical Performance Characteristics

Hydraulic Fluid: Viscosity 35 mm^2/s (164 SSU), Specific Gravity 0.850

Pressure Drop at Throttle Fully Open

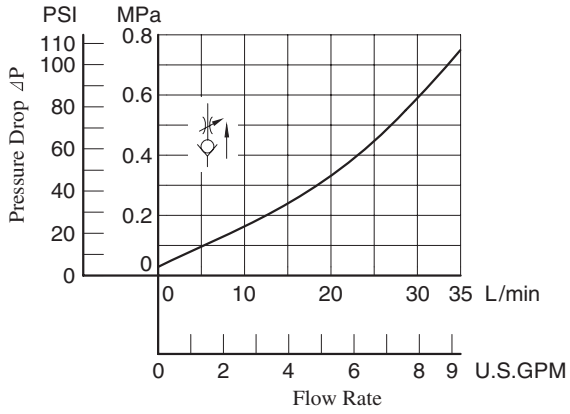

Metred Flow vs. Dial Position

⊿P: Differential Pressure MPa (PSI)

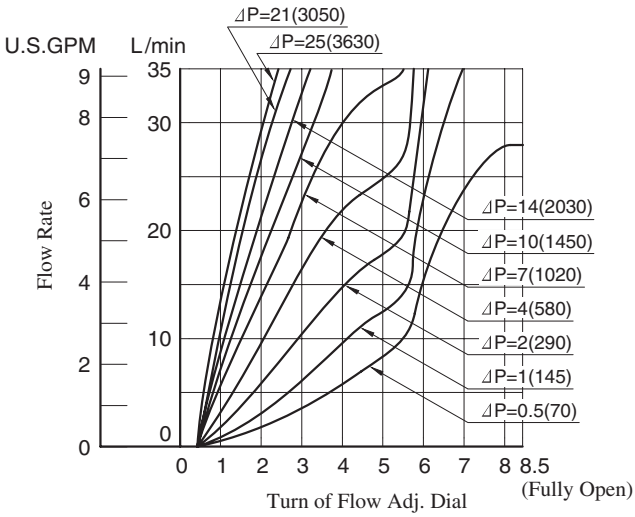

Pressure Drop

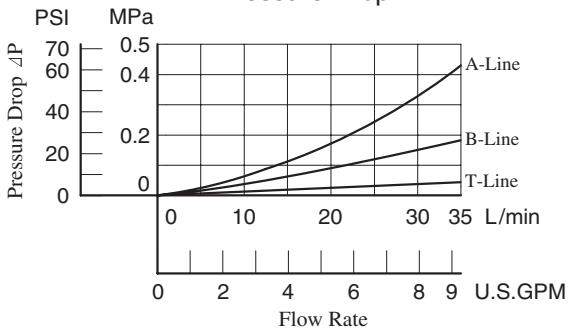

Instructions

- To make flow rate adjustment, loosen locking screw for the dial and turn the flow adjustment dial clockwise or anti-clockwise. For a decrease of flow, turn the dial clockwise. Be sure to re-tighten the locking screw firmly after the adjustment of the flow rate.

MSCP-01-30

DIMENSIONS IN MILLIMETRES (INCHES)

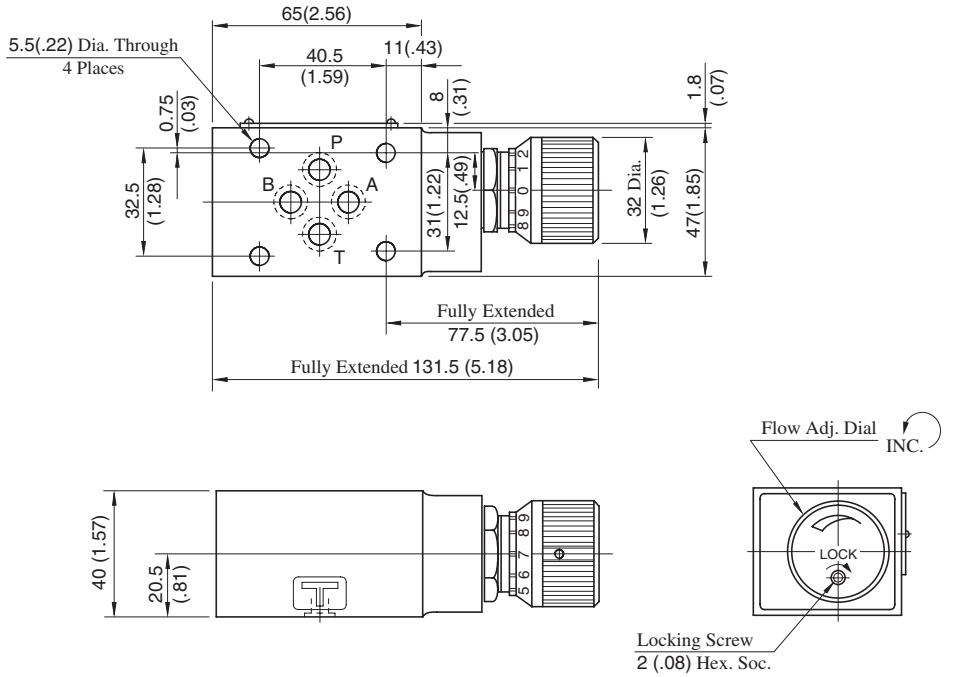

Approx. Mass..... 1.2 kg (2.6 lbs.)

Spare Parts List

MSCP-01-30

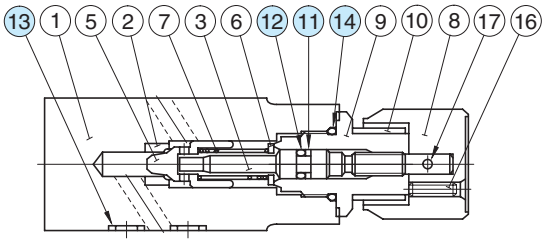

List of Seals

Item	Name of Parts	Part Numbers	Qty.	Remarks
11	Back Up Ring	SO-BB-P6	1	Included in Seal Kit Kit No.: KS-MSP-01-30
12	O-Ring	SO-NA-P6	1	
13	O-Ring	SO-NB-P9	4	
14	O-Ring	SO-NB-P18	1	

Throttle and Check Modular Valves

Specifications

Model Numbers	Max. Operating Pressure MPa (PSI)	Max. Flow L/min (U.S.GPM)
MSA-01-∗∗-50 MSB-01-∗∗-50 MSW-01-∗∗-50	31.5 (4570)	60 (15.9) ★

★ At the low differential pressure, maximum flow is limited. See "Pressure Drop at Throttle Fully Open" of the next page.

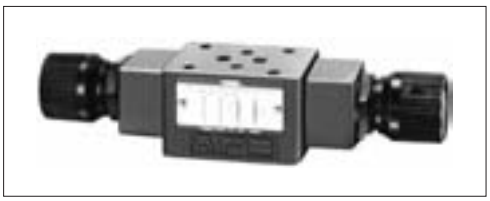

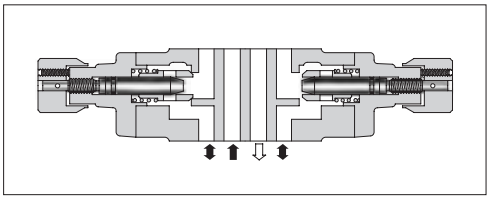

Model Number Designation

F-	MSW	-01	-X	Y	-50	∗
Special Seals	Series Number	Valve Size	Direction of Flow ("A" Line)	Direction of Flow ("B" Line)	Design Number	Design Standard
F: Special Seals for Phosphate Ester Type Fluids (Omit if not required)	**MSA** : Throttle and Check Valve for A-Line	**01**	**X**: Metre-out **Y**: Metre-in	—	**50**	Refer to ★
	MSB : Throttle and Check Valve for B-Line		—	**X**: Metre-out **Y**: Metre-in		
	MSW : Throttle and Check Valve for A&B-Lines		**X**: Metre-out **Y**: Metre-in			
			X: Metre-out	**Y**: Metre-in		
			Y: Metre-in	**X**: Metre-out		

★ Design Standards: None ..... Japanese Standard "JIS", European Design Standard and N. American Design Standard

Instructions

- To make flow rate adjustment, loosen locking screw for the dial and turn the flow adjustment dial clockwise or anti-clockwise. For a decrease of flow, turn the dial clockwise. Be sure to re-tighten the locking screw firmly after the adjustment of the flow rate.

Graphic Symbols

Metre-out	Metre-in
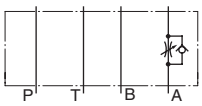 MSA-01-X	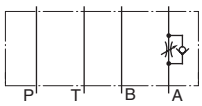 MSA-01-Y
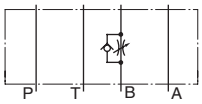 MSB-01-X	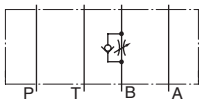 MSB-01-Y
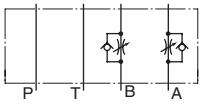 MSW-01-X	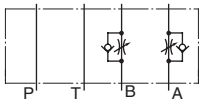 MSW-01-Y
Metre-out · Metre-in	**Metre-in · Metre-out**
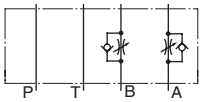 MSW-01-XY	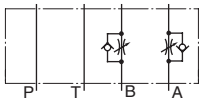 MSW-01-YX

Typical Performance Characteristics

Hydraulic Fluid: Viscosity 35 mm^2/s (164 SSU), Specific Gravity 0.850

Pressure Drop

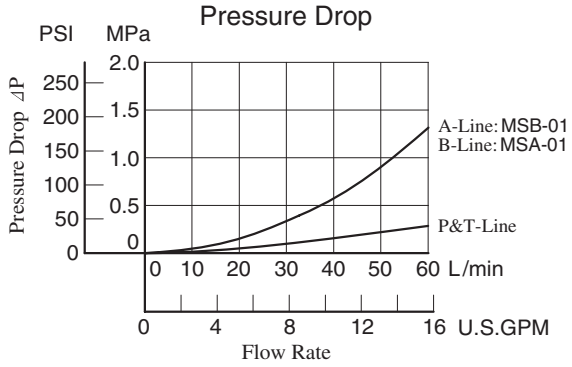

Metred Flow vs. Dial Position

⊿P: Differential Pressure MPa (PSI)

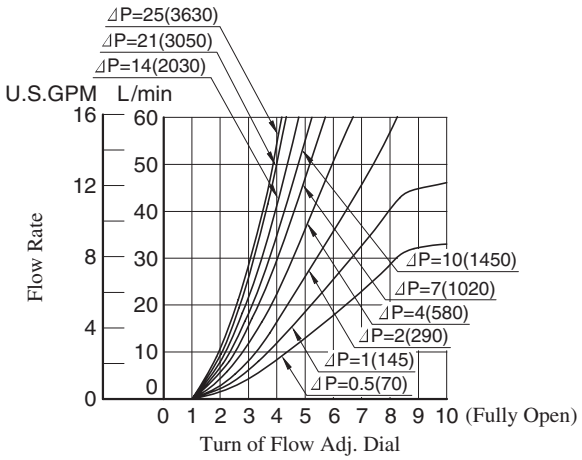

Pressure Drop for Free Flow

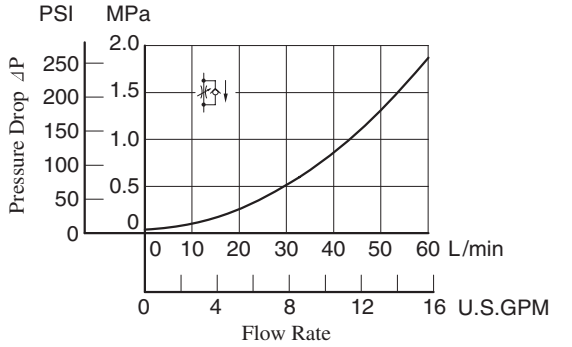

Pressure Drop at Throttle Fully Open

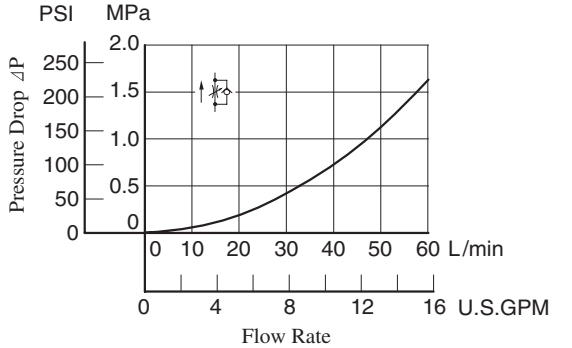

Application

Circuit of Clamp Cylinder for Injection Molding Machine

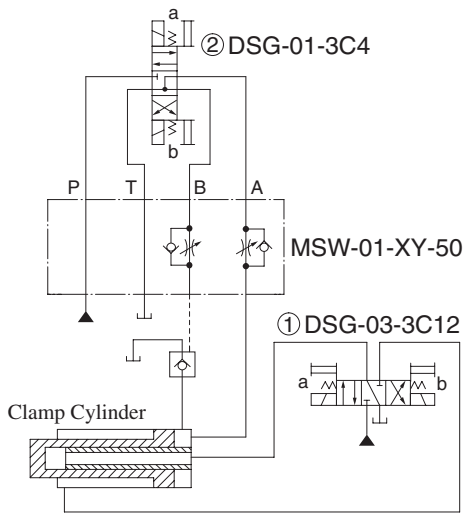

Operation Sequence

Clamp Cylinder	Advance	End Point Pressurisation	Decompression	Retreat
Solenoid Operated Directional Valve ①	Sol.a ON →		Centre Position	Sol.b ON
Solenoid Operated Directional Valve ②	Sol.b ON	Sol.a ON	Sol.b ON →	

MSW-01-$^{X}_{Y}$-50

DIMENSIONS IN MILLIMETRES (INCHES)

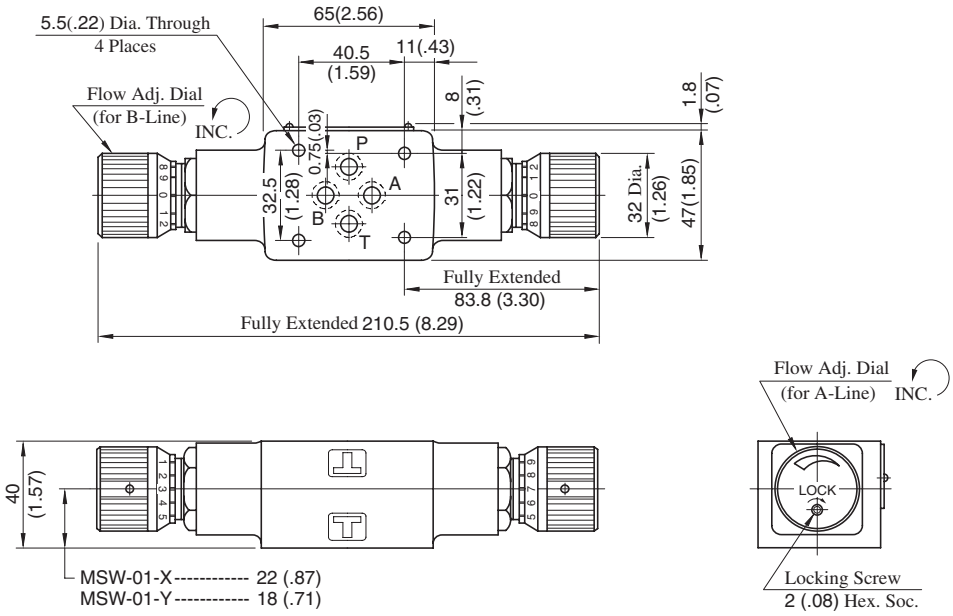

Approx. Mass..... 1.5 kg (3.3 lbs.)

MSW-01-$^{XY}_{YX}$-50

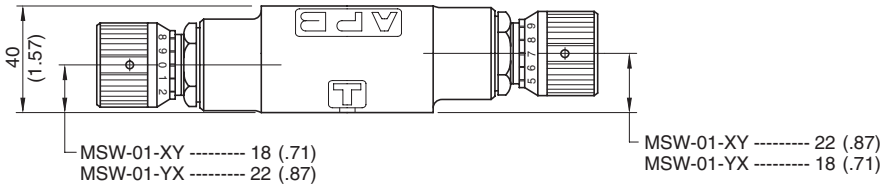

Approx. Mass..... 1.5 kg (3.3 lbs.)

- For other dimensions, refer to "MSW-01-$^{X}_{Y}$" drawing above.

MSA-01-$^{X}_{Y}$-50

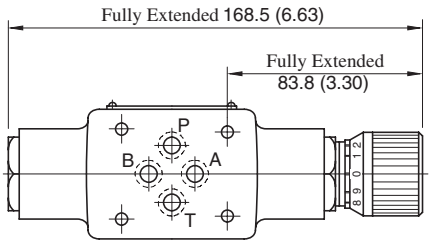

Approx. Mass..... 1.3 kg (2.9 lbs.)

MSB-01-$^{X}_{Y}$-50

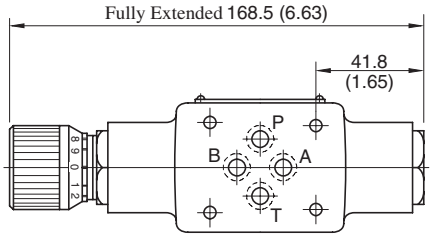

Approx. Mass..... 1.3 kg (2.9 lbs.)

- For other dimensions, refer to "MSW-01" drawing above.

Spare Parts List

MSA-01-$^{X}_{Y}$-50

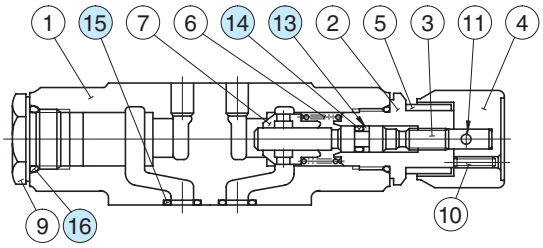

MSB-01-$^{X}_{Y}$-50

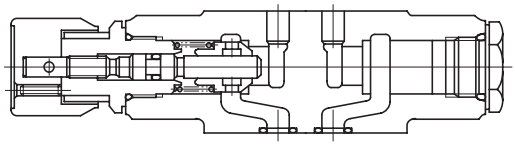

MSW-01-∗∗-50

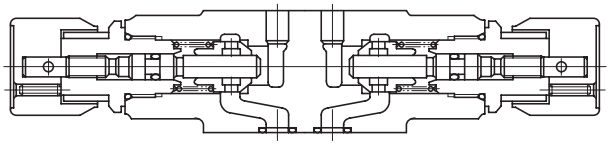

List of Seals

Item	Name of Parts	Part Numbers	Quantity	
			MSA,MSB	MSW
13	Back Up Ring	SO-BB-P6	1	2
14	O-Ring	SO-NA-P6	1	2
15	O-Ring	SO-NB-P9	4	4
16	O-Ring	SO-NB-P18	2	2

Note: When ordering seals, please specify the seal kit number from the table right.

List of Seal Kits

Valve Model Numbers	Seal Kit Numbers
MSA-01	KS-MSA-01-30
MSB-01	
MSW-01	KS-MSW-01-30

Check Modular Valves

Specifications

Model Numbers	Max. Operating Pressure MPa (PSI)	Max. Flow L/min (U.S.GPM)
MCP-01-∗-30 MCT-01-∗-30	31.5 (4570)	35 (9.25)

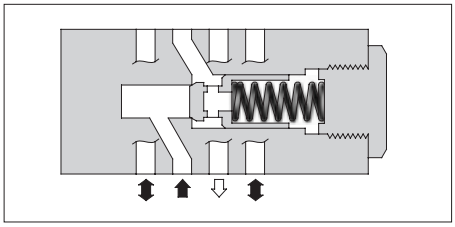

Model Number Designation

F-	MCP	-01	-0	-30	∗
Special Seals	Series Number	Valve Size	Cracking Pressure MPa (PSI)	Design Number	Design Standard
F: Special Seals for Phosphate Ester Type Fluids (Omit if not required)	**MCP** : Check Valve for P-Line **MCT** : Check Valve for T-Line	**01**	**0** : 0.035 (5) **2** : 0.2 (29) **4** : 0.4 (58)	**30**	Refer to ★

★ Design Standards: None ..... Japanese Standard "JIS", European Design Standard and N. American Design Standard

Graphic Symbols

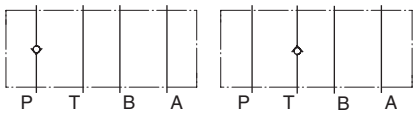

MCP-01 MCT-01

Typical Performance Characteristics

Hydraulic Fluid: Viscosity 35 mm²/s (164 SSU), Specific Gravity 0.850

Pressure Drop for Free Flow

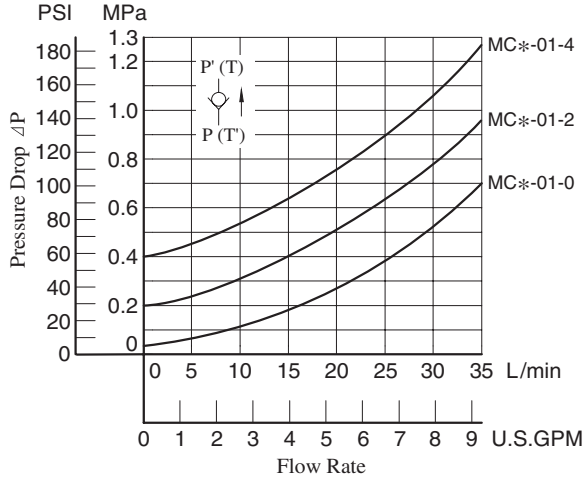

Pressure Drop

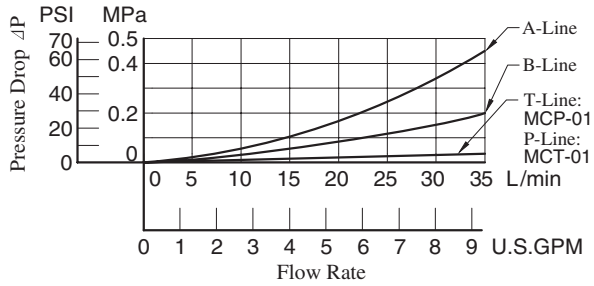

MCP MCT-01-∗-30

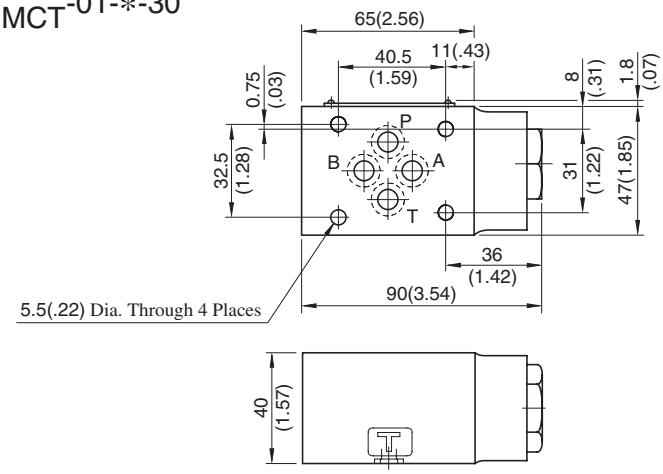

DIMENSIONS IN MILLIMETRES (INCHES)

Approx. Mass..... 1.1 kg (2.4 lbs.)

MCP MCT-01-∗-30

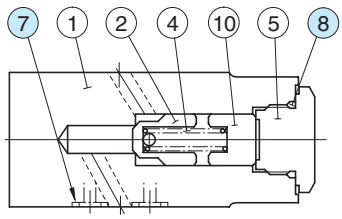

List of Seals

Item	Name of Parts	Part Numbers	Qty.	Remarks
7	O-Ring	SO-NB-P9	4	Included in Seal Kit Kit No.: KS-MCP-01-30
8	O-Ring	SO-NB-P18	1	

Anti-Cavitation Modular Valves

Specifications

Model Number	Max. Operating Pressure MPa (PSI)	Max. Flow L/min (U.S.GPM)
MAC-01-30	31.5 (4570)	35 (9.25)

Model Number Designation

F-	MAC	-01	-30	*
Special Seals	Series Number	Valve Size	Design Number	Design Standard
F: Special Seals for Phosphate Ester Type Fluids (Omit if not required)	**MAC**: Anti-Cavitation Valve	**01**	**30**	Refer to ★

★ Design Standards: None ..... Japanese Standard "JIS", European Design Standard and N. American Design Standard

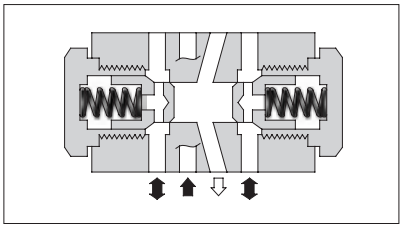

Graphic Symbol

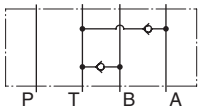

Presure Drop

Hydraulic Fluid: Viscosity 35 mm^2/s (164 SSU), Specific Gravity 0.850

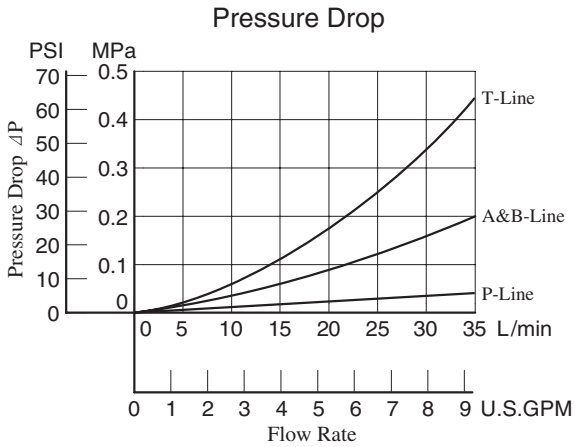

MAC-01-30

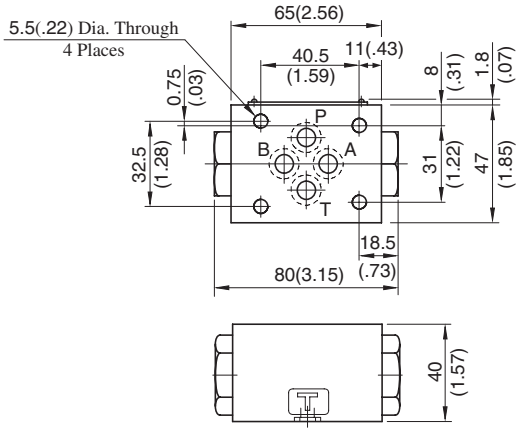

DIMENSIONS IN MILLIMETRES (INCHES)

Approx. Mass.....0.8 kg (1.8 lbs.)

MAC-01-30

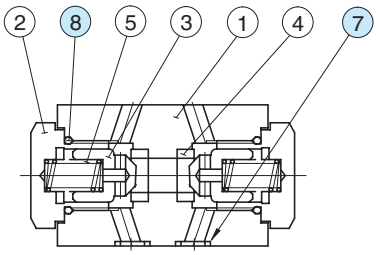

● List of Seals

Item	Name of Parts	Part Numbers	Qty.	Remarks
7	O-Ring	SO-NB-P9	4	Included in Seal Kit Kit No.: KS-MAC-01-30
8	O-Ring	SO-NB-P18	2	

Pilot Operated Check Modular Valves

Specifications

Model Numbers		Max. Operating Pressure MPa (PSI)	Max. Flow L/min (U.S.GPM)
Standard	MP∗-01-∗-40	31.5 (4570)	35 (9.25)
Low Pilot Pressure Control Type	MP∗-01-∗-4001		

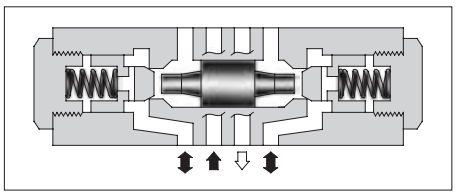

Model Number Designation

F-	MPA	-01	-2	-40	∗
Special Seals	Series Number	Valve Size	Cracking Pressure MPa (PSI)	Design Number	Design Standard
F: Special Seals for Phosphate Ester Type Fluids (Omit if not required)	**MPA** : Pilot Operated Check Valve for A-Line **MPB** : Pilot Operated Check Valve for B-Line **MPW** : Pilot Operated Check Valve for A&B-Lines	**01**	**2** : 0.2 (29) **4** : 0.4 (58)	**40** (Standard) **4001** (Low Pilot Pressure Control Type)	Refer to ★

★ Design Standards: None ..... Japanese Standard "JIS", European Design Standard and N. American Design Standard

Graphic Symbols

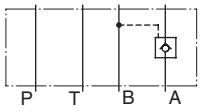

MPA-01

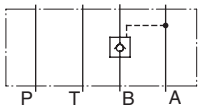

MPB-01

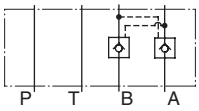

MPW-01

Typical Performance Characteristics

Hydraulic Fluid: Viscosity 35 mm^2/s (164 SSU), Specific Gravity 0.850

Pressure Drop for Free Flow

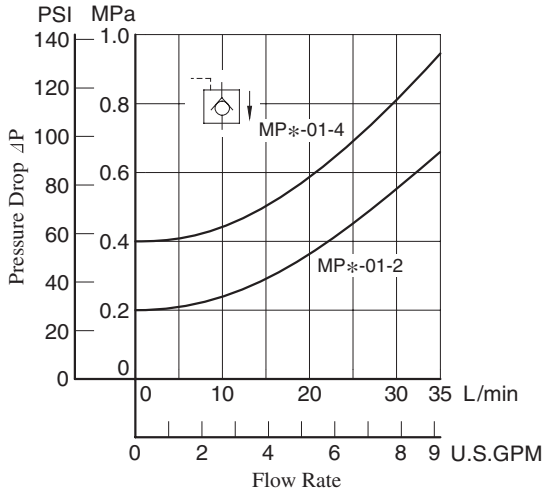

Pressure Drop for Reversed Controlled Flow

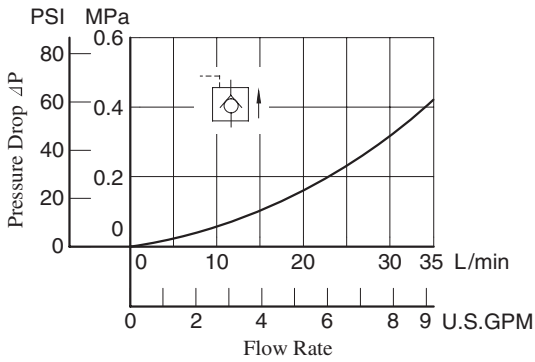

Pressure Drop

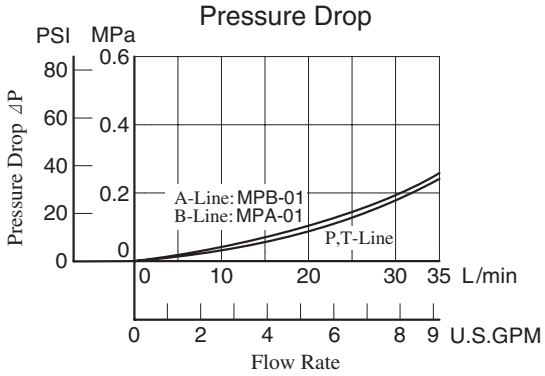

Min. Pilot Pressure

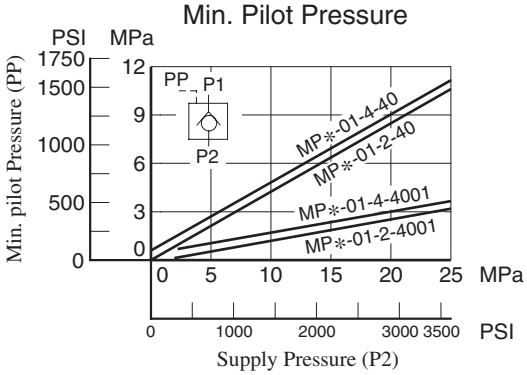

MPA-01-∗-40/4001
MPB-01-∗-40/4001
MPW-01-∗-40/4001

DIMENSIONS IN MILLIMETRES (INCHES)

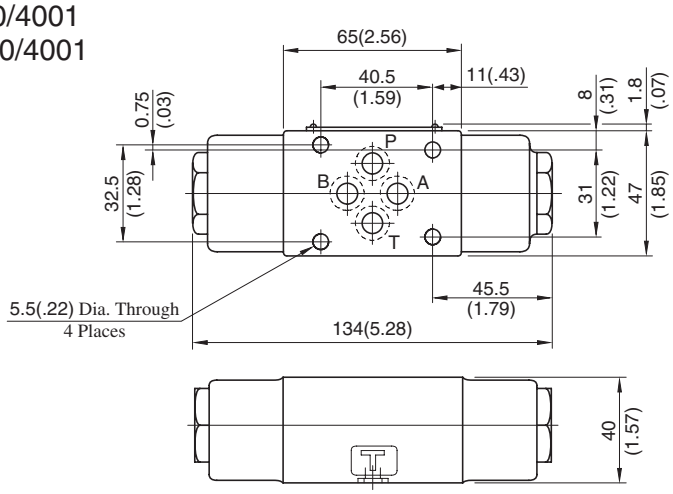

Approx. Mass..... 1.2 kg (2.6 lbs.)

Spare Parts List

MPW-01-∗-40

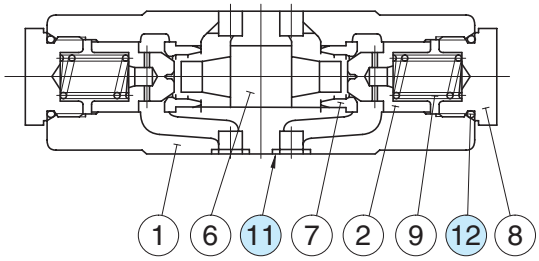

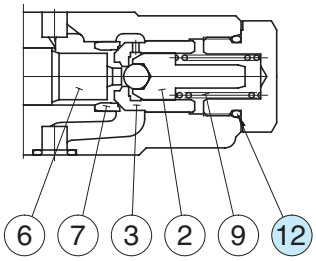

Low Pilot Pressure Control Type
(MPW-01-∗-4001)

MPA-01-∗-40

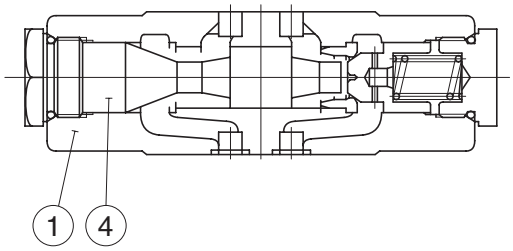

MPB-01-∗-40

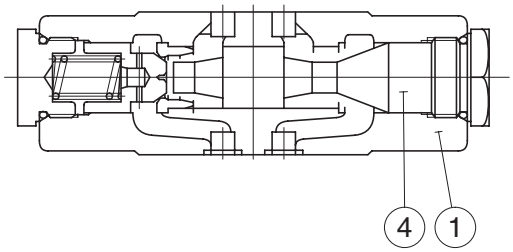

List of Seals

Item	Name of Parts	Part Numbers	Qty.	Remarks
11	O-Ring	SO-NB-P9	4	Included in Seal Kit Kit No.: KS-MAC-01-30
12	O-Ring	SO-NB-P18	2	

End Plates

Blocking plates are used for auxiliary mounting surface or for closing unnecessary circuits.
Bypass plates are used for unidirectional circuits that require no solenoid operated directional valves.

Specifications

Model Numbers	Max. Operating Pressure MPa (PSI)	Max. Flow L/min (U.S.GPM)
MDC-01-⁎-30	31.5 (4570)	35 (9.25)

Graphic Symbols

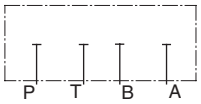

MDC-01-A

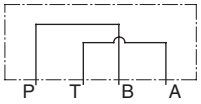

MDC-01-B

Model Number Designation

F-	MDC	-01	-A	-30	⁎
Special Seals	Series Number	Plate Size	Type of Plate	Design Number	Design Standard
F: Special Seals for Phosphate Ester Type Fluids (Omit if not required)	**MDC**: End Plate	**01**	**A**: Blocking Plate **B**: Bypass Plate	**30**	Refer to ★

★ Design Standards: None ..... Japanese Standard "JIS", European Design Standard and N. American Design Standard

Typical Performance Characteristics

Hydraulic Fluid: Viscosity 35 mm²/s (164 SSU), Specific Gravity 0.850

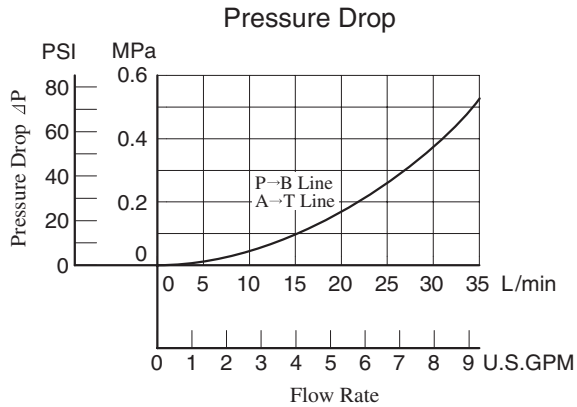

MDC-01-⁎-30

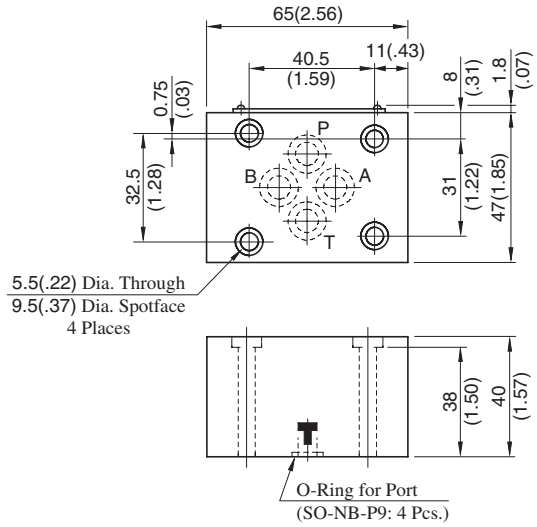

DIMENSIONS IN MILLIMETRES (INCHES)

Approx. Mass..... 1 kg (2.2 lbs.)

Connecting Plate

These plates are used for detecting pressure of each line.

Specifications

Model Numbers	Max. Operating Pressure MPa (PSI)	Max. Flow L/min (U.S.GPM)
MDS-01-∗-30/3090	31.5 (4570)	35 (9.25)

Model Number Designation

F-	MDS	-01	-PA	-30	∗
Special Seals	Series Number	Plate Size	Type of Detecting Line	Design Number	Design Standard
F: Special Seals for Phosphate Ester Type Fluids (Omit if not required)	**MDS**: Connecting Plate	**01**	**PA**: P&A-Lines **PB**: P&B-Lines **AT**: A&T-Lines	**30**	Refer to ★

★ Design Standards: None ..... Japanese Standard "JIS" and European Design Standard
90 ..... N. American Design Standard

Pressure Drop

Hydraulic Fluid: Viscosity 35 mm^2/s (164 SSU),
Specific Gravity 0.850

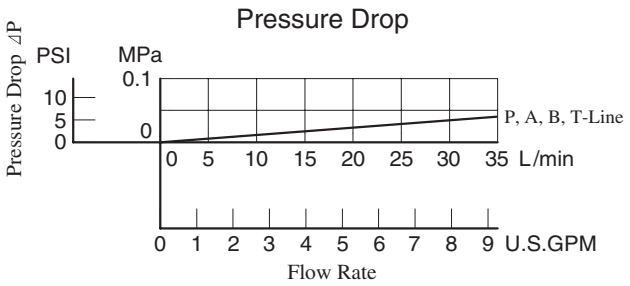

Graphic Symbols

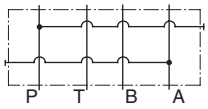

MDS-01-PA

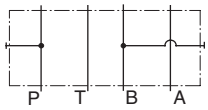

MDS-01-PB

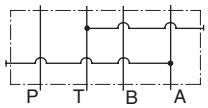

MDS-01-AT

MDS-01-∗-30/3090

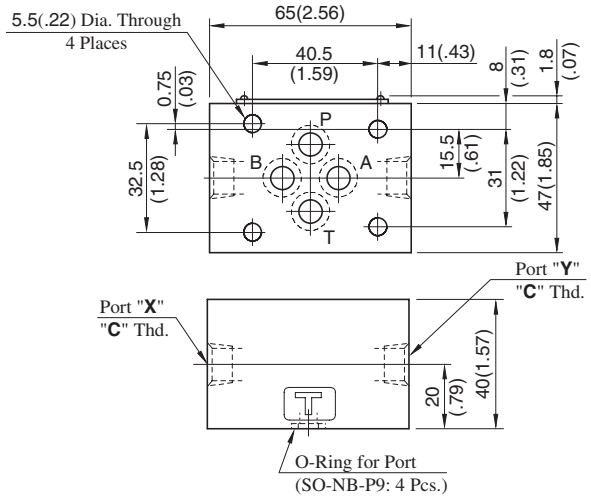

Approx. Mass.....0.8 kg (1.8 lbs.)

Model Numbers	Pressure Detecting Line	
	Port "**X**"	Port "**Y**"
MDS-01-PA	P-Line	A-Line
MDS-01-PB	B-Line	P-Line
MDS-01-AT	T-Line	A-Line

Model Numbers	Thread Size "**C**" Thd.
MDS-01-∗-30	Rc 1/4 = 1/4 BSP.Tr
MDS-01-∗-3090	1/4 NPT

DIMENSIONS IN MILLIMETRES (INCHES)

Base Plates For Modular Valves

Specifications

Max. Operating Pressure ---------- 25 MPa (3630 PSI)

Model Number Designation

MMC	-01	-6	-40	*
Series Number	Plate Size	Number of Stations	Design Number	Design Standard
MMC : Base Plate	**01**	**1** : 1 Station **2** : 2 Stations **3** : 3 Stations **4** : 4 Stations **5** : 5 Stations **6** : 6 Stations **7** : 7 Stations **8** : 8 Stations **9** : 9 Stations **10** : 10 Stations	**40**	**None** : Japanese Standard "JIS" **80** : European Design Standard **90** : N.American Design Standard

Pressure Drop

Hydraulic Fluid: Viscosity 35 mm^2/s (164 SSU),Specific Gravity 0.850

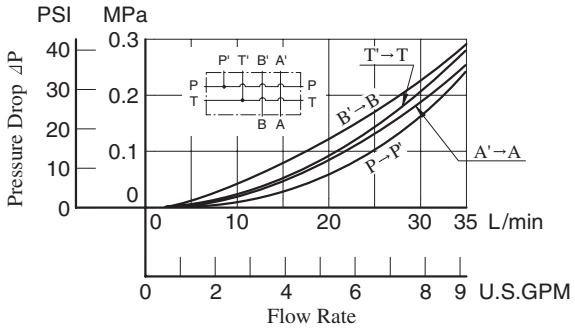

Graphic Symbols

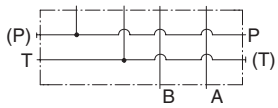

MMC-01-1

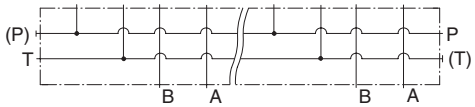

MMC-01-2-10

Instructions

- **Port Used**: Base plate has three (two, in case of 1 station type) **pressure port "P"**s and four **tank port "T"**s. Any one of these ports or two or more ports may be used. However, please note that the ports marked with (P) or (T) in the drawing are normally plugged. Remove the plugs when using such ports. Make sure that ports that are not currently used are properly plugged.

Interface Mounting Surface Dimensions for 1/8 Modular Valve

When standard base plates (MMC-01) are not used, the mounting surface described on right must be prepared. The mounting surface should have a good machined finish.

Design Std.	"**C**" Thd.	**E**
Japanese Standard "JIS" and European Design Standard	M5	10 (.39)
N.American Design Standard	No. 10-24 UNC	12 (.47)

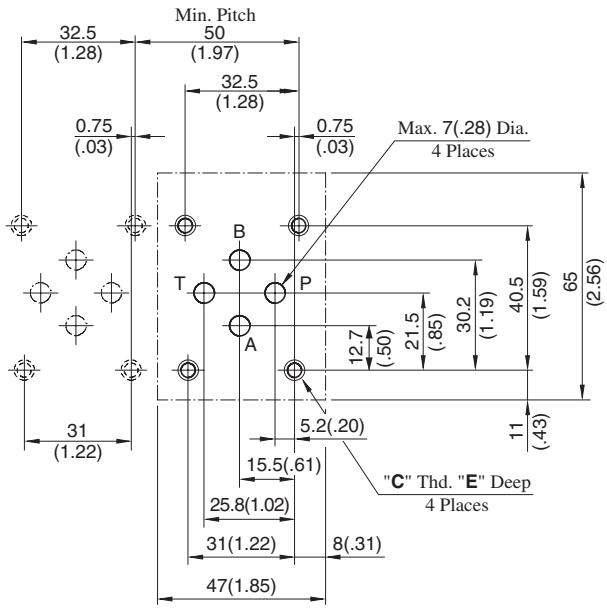

DIMENSIONS IN MILLIMETRES (INCHES)

MMC-01-1-40/4090

DIMENSIONS IN MILLIMETRES (INCHES)

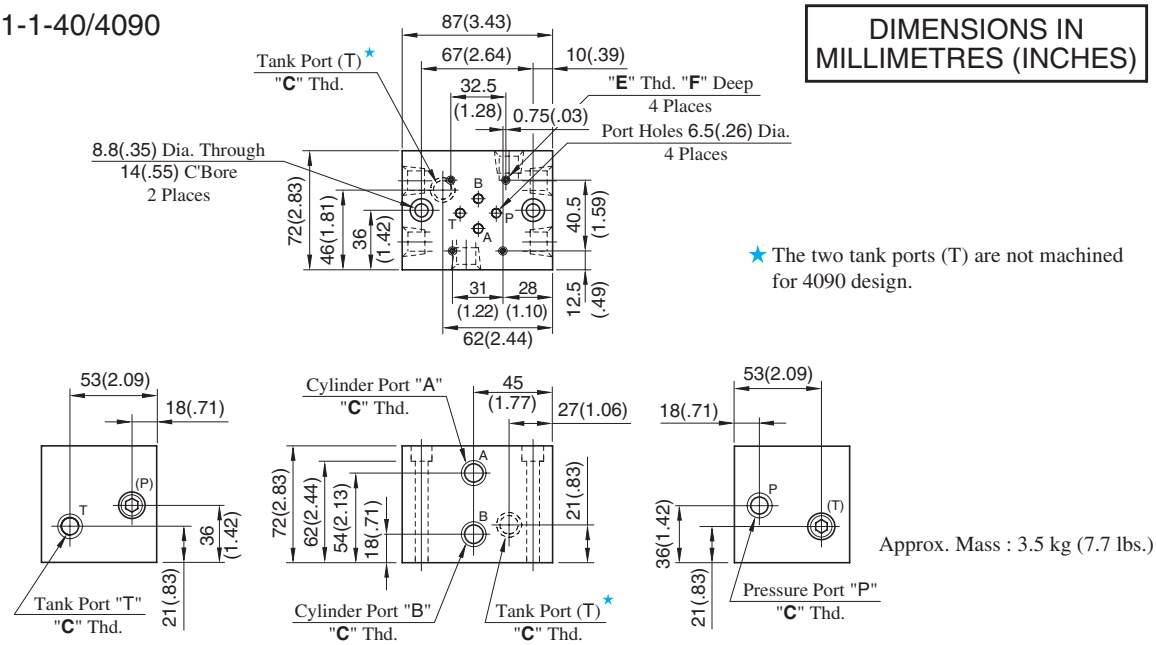

★ The two tank ports (T) are not machined for 4090 design.

Approx. Mass : 3.5 kg (7.7 lbs.)

MMC-01-∗-40/4090

Number of Station
(2-10 Stations)

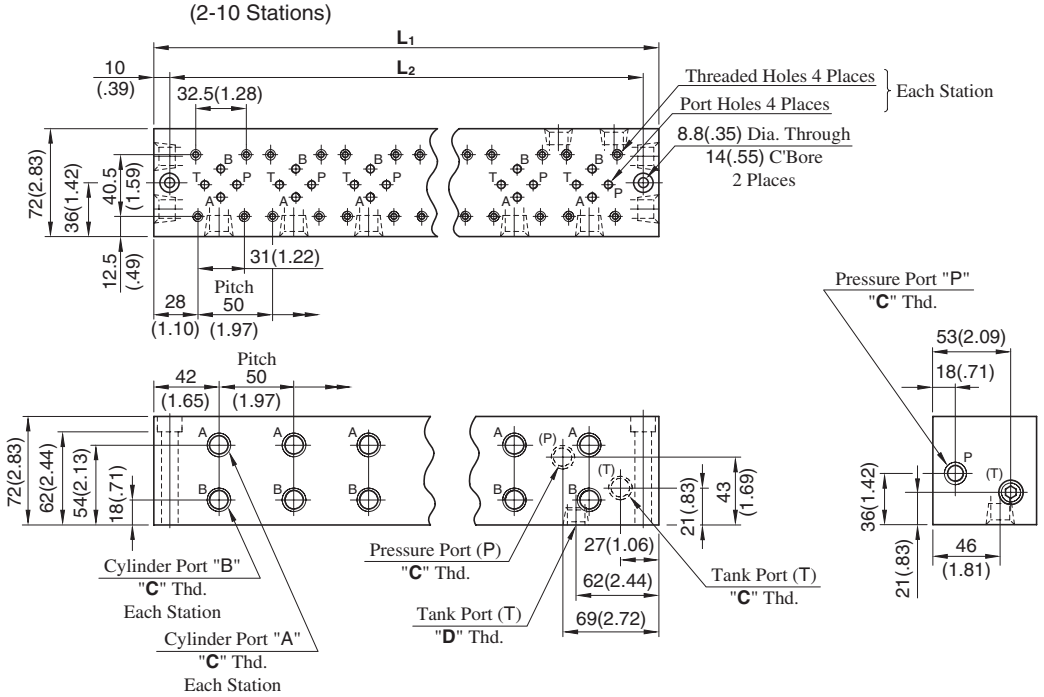

● For other dimensions, refer to above Model MMC-01-1.

Model Numbers	Thread Size			Dimensions mm (Inches)
	"C" Thd.	"D" Thd.	"E" Thd.	F
MMC-01-∗-40	Rc 3/8	Rc 1/2	M5	10 (.39)
MMC-01-∗-4090	3/8 NPT	1/2 NPT	No.10-24 UNC	12 (.47)

Model Numbers	Dimensions mm (Inches)		Approx. Mass kg (lbs.)	Model Numbers	Dimensions mm (Inches)		Approx. Mass kg (lbs.)
	L_1	L_2			L_1	L_2	
MMC-01-2	137 (5.39)	117 (4.61)	5.5 (12.1)	MMC-01-7	387 (15.24)	367 (14.45)	13.0 (28.7)
MMC-01-3	187 (7.36)	167 (6.57)	7.0 (15.4)	MMC-01-8	437 (17.20)	417 (16.42)	14.5 (32.0)
MMC-01-4	237 (9.33)	217 (8.54)	8.5 (18.7)	MMC-01-9	487 (19.17)	467 (18.39)	16.0 (35.3)
MMC-01-5	287 (11.30)	267 (10.51)	10.0 (22.1)	MMC-01-10	537 (21.14)	517 (20.35)	17.5 (38.6)
MMC-01-6	337 (13.27)	317 (12.48)	11.5 (25.4)				

MMC-01-1-4080

DIMENSIONS IN MILLIMETRES (INCHES)

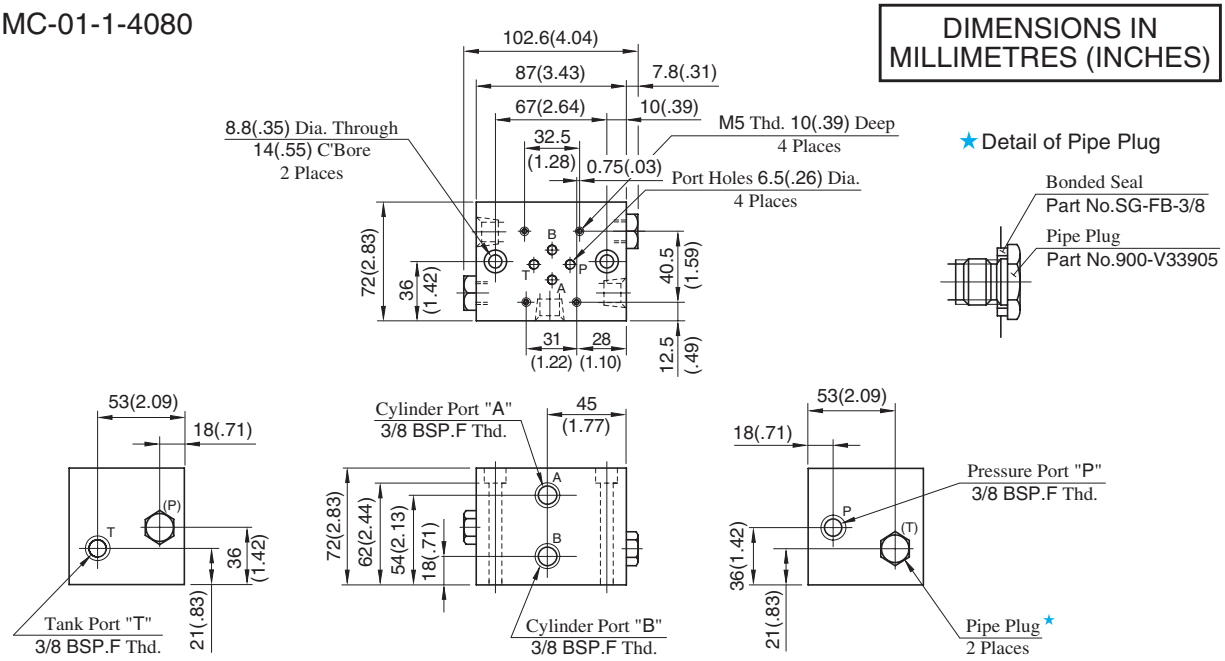

Approx. Mass : 3.5 kg (7.7 lbs.)

MMC-01-∗-4080

Number of Station
(2-10 Stations)

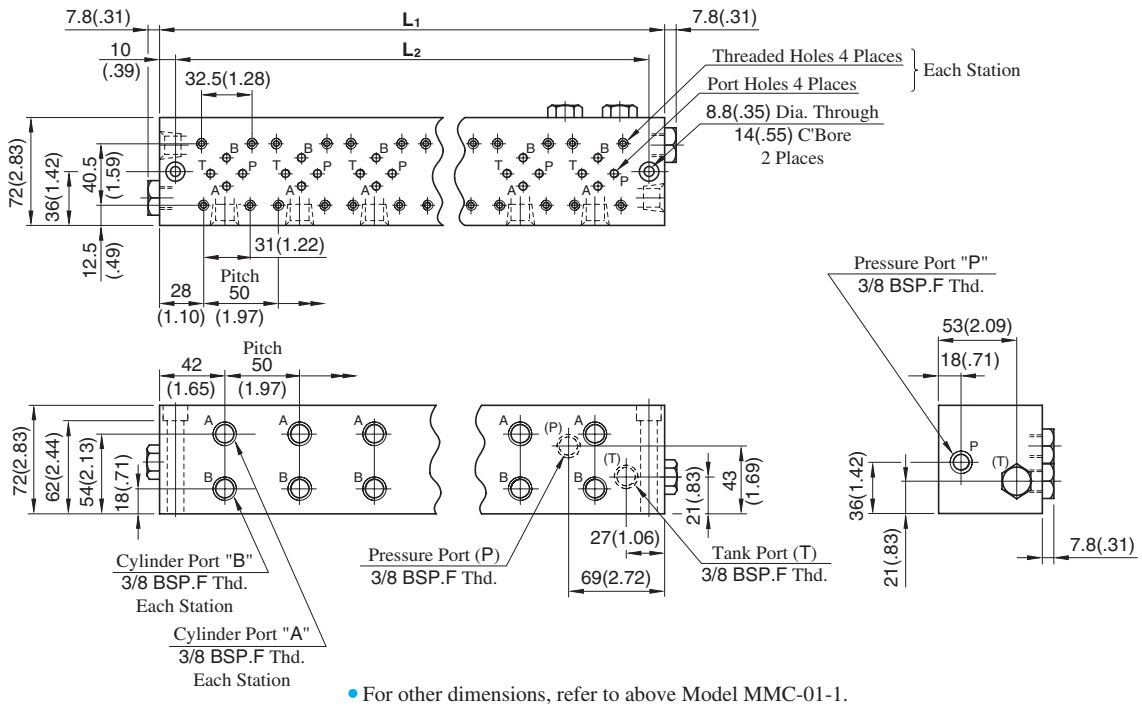

● For other dimensions, refer to above Model MMC-01-1.

Model Numbers	Dimensions mm (Inches)		Approx. Mass kg (lbs.)	Model Numbers	Dimensions mm (Inches)		Approx. Mass kg (lbs.)
	L1	L2			L1	L2	
MMC-01-2	137 (5.39)	117 (4.61)	5.5 (12.1)	MMC-01-7	387 (15.24)	367 (14.45)	13.0 (28.7)
MMC-01-3	187 (7.36)	167 (6.57)	7.0 (15.4)	MMC-01-8	437 (17.20)	417 (16.42)	14.5 (32.0)
MMC-01-4	237 (9.33)	217 (8.54)	8.5 (18.7)	MMC-01-9	487 (19.17)	467 (18.39)	16.0 (35.3)
MMC-01-5	287 (11.30)	267 (10.51)	10.0 (22.1)	MMC-01-10	537 (21.14)	517 (20.35)	17.5 (38.6)
MMC-01-6	337 (13.27)	317 (12.48)	11.5 (25.4)				

Mounting Bolt Kits

Valves are mounted with four stud bolts. Valve combination varies according to the circuit type. Hence, the mounting bolt kits are available on a combination type basis.
When ordering the bolt kit, be sure to give the bolt kit model number from the table below.

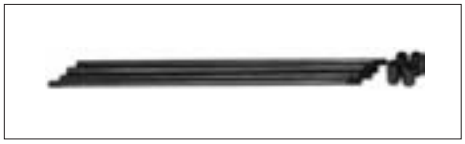

Model Number Designation

MBK	-01	-02	-30	∗
Series Number	Size of Modular Valve	Bolt Number	Design Number	Design Standard
MBK: Bolt Kits for Modular Valves	**01**	**01, 02, 03, 04, 05** (Refer to the following chart)	**30**	Refer to ★

★ Design Standards: None ..... Japanese Standard "JIS" and European Design Standard
90 ..... N. American Design Standard

Bolt Kit Composition

Stud Bolt ------ 4 Pcs.
Nut ---------- 4 Pcs.
} 1 Set

Note: In case of bolt kit model number having "05", four hexagon socket head cap screws only.

Tightening Torque:

Operating Pressure MPa (PSI)	Tightening Torque Nm (in. lbs.)
25(3630) or less	5 - 6 (44 - 53)
More Than 25(3630)	6 - 7 (53 - 62)

Bolt Kits Selection Chart

Model Numbers	Quantity of valves to be stacked: Solenoid Operated Directional Valve (∗-DSG-01)	End Plate (MDC-01)	Modular Valve & Connecting Plate	Approx. Mass g (lbs.)
MBK-01-01-30∗	1	0	1	60(.13)
	0	1		
MBK-01-02-30∗	1	0	2	100(.22)
	0	1		
MBK-01-03-30∗	1	0	3	130(.29)
	0	1		
MBK-01-04-30∗ ★1	1	0	4	160(.35)
	0	1		
MBK-01-05-30∗	1 ★2	0	0	40(.09)
	0	1		

★1. In case of MBK-01-04-30∗, operating pressure is restricted at 25 MPa (3630 PSI) or less.
★2. The solenoid operated directional valve comes with mounting bolts.

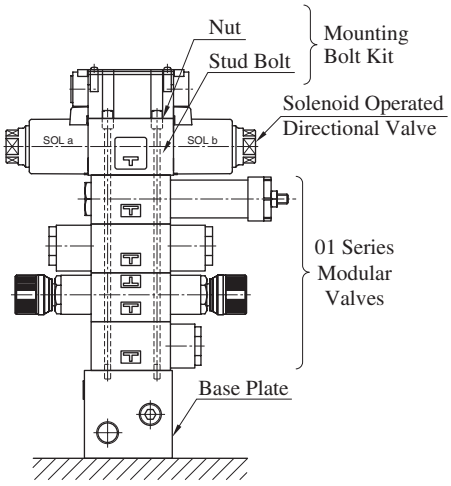

Stacking Example

MBK-01-01/02/03/04-30/3090

Stud Bolt

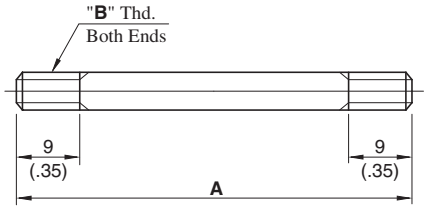

Nut

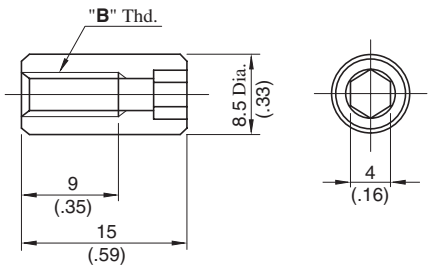

MBK-01-05-30/3090

Socket Head Cap Screw

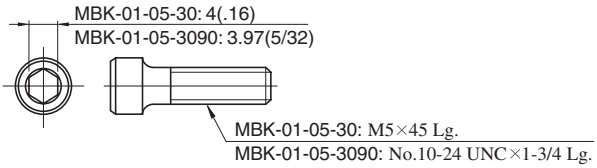

DIMENSIONS IN MILLIMETRES (INCHES)

Model Numbers	**A** mm (In.)	"**B**" Thd.
MBK-01-01-30	94 (3.70)	M5
MBK-01-02-30	134 (5.28)	
MBK-01-03-30	174 (6.85)	
MBK-01-04-30	214 (8.43)	
MBK-01-01-3090	94 (3.70)	No.10-24 UNC
MBK-01-02-3090	134 (5.28)	
MBK-01-03-3090	174 (6.85)	
MBK-01-04-3090	214 (8.43)	

Type of Modular Valve

Class	Model Numbers	Page
	Solenoid Operated Directional Valve (S-)DSG-03-✻✻✻-✻-50/5090 E-DSG-03-✻✻✻-D✻-50/5090 T-DSG-03-✻✻✻-D24✻-50/5090 G-DSG-03-✻✻✻-✻-50/5090	361 378 379 412
Pressure Control Valves	Releif Valves (for "P-Line") MBP-03-✻-30	578
	Releif Valves (for "A-Line") MBA-03-✻-30	578
	Releif Valves (for "B-Line") MBB-03-✻-30	578
	Releif Valves (for "A&B-Lines") MBW-03-✻-30	578
	Reducing Valves (for "P-Line") MRP-03-✻-30/3090	581
	Reducing Valves (for "A-Line") MRA-03-✻-30/3090	581
	Reducing Valves (for "B-Line") MRB-03-✻-30/3090	581
	Reducing Valves for Low Pressure Setting (for "P-Line") MRLP-03-10/1090	584
	Reducing Valves for Low Pressure Setting (for "A-Line") MRLA-03-10/1090	584
	Reducing Valves for Low Pressure Setting (for "B-Line") MRLB-03-10/1090	584
	Sequence Valves (for "P-Line") MHP-03-✻-20	588
	Counterbalance Valves (for "A-Line") MHA-03-✻-20	588
	Counterbalance Valves (for "B-Line") MHB-03-✻-20	588
Flow Control Valves	Flow Control Valves (for "P-Line") MFP-03-11	591
	Flow Control and Check Valves (for "A-Line", Metre-out) MFA-03-X-11	591
	Flow Control and Check Valves (for "A-Line", Metre-in) MFA-03-Y-11	591
	Flow Control and Check Valves (for "B-Line", Metre-out) MFB-03-X-11	591
	Flow Control and Check Valves (for "B-Line", Metre-in) MFB-03-Y-11	591
	Flow Control and Check Valves (for "A&B-Lines", Metre-out) MFW-03-X-11	591
	Flow Control and Check Valves (for "A&B-Lines", Metre-in) MFW-03-Y-11	591
	Temperature Compensated Throttle and Check Valves (for "A-Line", Metre-out) MSTA-03-X-20	595
	Temperature Compensated Throttle and Check Valves (for "B-Line", Metre-out) MSTB-03-X-20	595

Class	Model Numbers	Page
Flow Control Valves	Temperature Compensated Throttle and Check Valves (for "A&B-Lines", Metre-out) MSTW-03-X-20	595
	Throttle Valves (for "P-Line") MSP-03-30	598
	Check and Throttle Valves (for "P-Line") MSCP-03-20	600
	Throttle and Check Valves (for "A-Line", Metre-out) MSA-03-X-40	602
	Throttle and Check Valves (for "A-Line", Metre-in) MSA-03-Y-40	602
	Throttle and Check Valves (for "B-Line", Metre-out) MSB-03-X-40	602
	Throttle and Check Valves (for "B-Line", Metre-in) MSB-03-Y-40	602
	Throttle and Check Valves (for "A&B-Lines", Metre-out) MSW-03-X-40	602
	Throttle and Check Valves (for "A&B-Lines", Metre-in) MSW-03-Y-40	602
Directional Control Valves	Check Valves (for "P-Line") MCP-03-✻-10	605
	Check Valves (for "A-Line") MCA-03-✻-20	605
	Check Valves (for "B-Line") MCB-03-✻-20	605
	Check Valves (for "T-Line") MCT-03-✻-10	605
	Check Valves (for "P&T-Lines") MCPT-03-P✻-T✻-10	607
	Anti-Cavitation Valves MAC-03-10	609
	Pilot Operated Check Valves (for "A-Line") MPA-03-✻-20/2001	610
	Pilot Operated Check Valves (for "B-Line") MPB-03-✻-20/2001	610
	Pilot Operated Check Valves (for "A&B-Lines") MPW-03-✻-20/2001	610
Modular Plates and Mounting Bolts	End Plates (Blocking Plates) MDC-03-A-10	613
	End Plates (Bypass Plates) MDC-03-B-10	613
	Connecting Plates MDS-03-10/1090	614
	Base Plates MMC-03-T-✻-21/2180/2190	615
	Bolt Kits MBK-03-✻-10/1090	618

Relief Modular Valves

Specifications

Model Numbers	Max. Operating Pressure MPa (PSI)	Max. Flow L/min (U.S.GPM)
MBP-03-∗-30 MBA-03-∗-30 MBB-03-∗-30 MBW-03-∗-30	31.5 (4570)	70 (18.5)

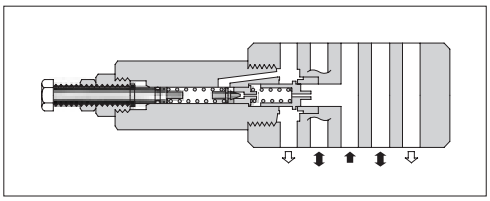

Model Number Designation

F-	MBA	-03	-B	-30	∗
Special Seals	Series Number	Valve Size	Pres. Adj. Range MPa (PSI)	Design Number	Design Standard
F: Special Seals for Phosphate Ester Type Fluids (Omit if not required)	**MBP** : Relief Valve for P-Line **MBA** : Relief Valve for A-Line **MBB** : Relief Valve for B-Line **MBW** : Relief Valve for A&B-Lines	**03**	**B**: ∗-7 ★1 (∗-1020) **H**: 3.5-31.5 (510-4570)	**30**	Refer to ★2

★1. See the "Minimum Adjustment Pressure" of the next page for the item marked ∗.
★2. Design Standards: None ..... Japanese Standard "JIS", European Design Standard and N. American Design Standard

Instructions

- The minimum adjustment pressure equals the value obtained from the minimum adjustment pressure characteristics plus the tank line back pressure of the next page. This back pressure should include the value of the T-line pressure drop characteristics of the valves stacked to the base plate side of the modular valve.
- To make pressure adjustment, loosen the lock nut and turn the pressure adjustment screw clockwise or anti-clockwise. For an increase of pressure, turn the screw clockwise. Be sure to re-tighten the lock nut firmly after making adjustment to the pressure.
- In case of a small flow, the setting pressure may become unstable. To avoid this, refer to the minimum flow characteristic curve of the next page and use the valve within a range as shown with .

Model Numbers	Graphic Symbols	Detailed Graphic Symbols
MBP-03	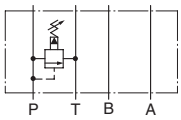	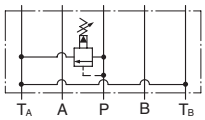
MBA-03	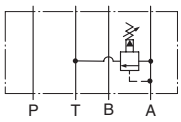	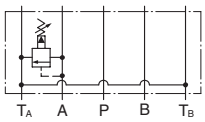
MBB-03	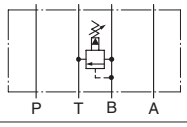	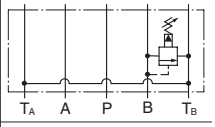
MBW-03	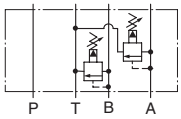	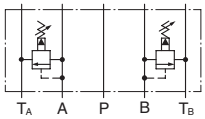

Typical Performance Characteristics

Hydraulic Fluid: Viscosity 35 mm^2/s (164 SSU), Specific Gravity 0.850

Nominal Override Characteristics

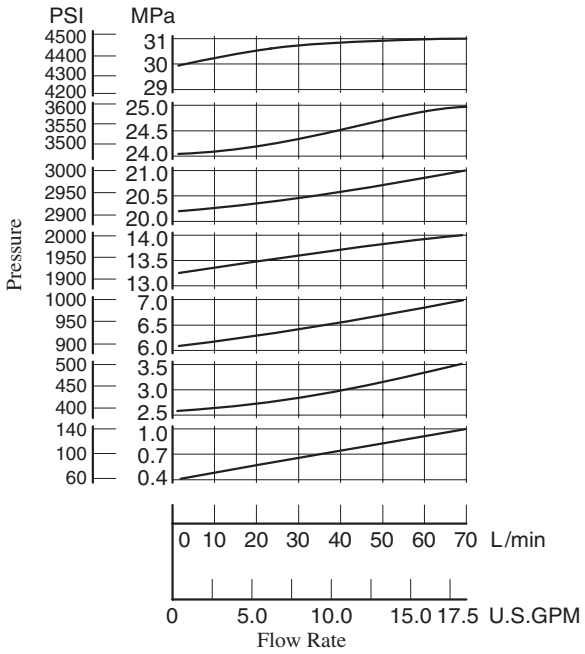

Min. Adjustment Pressure

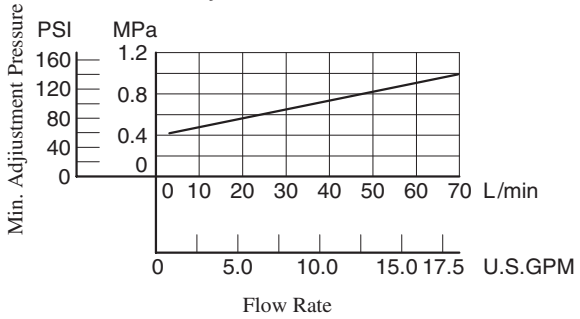

Pressure Drop

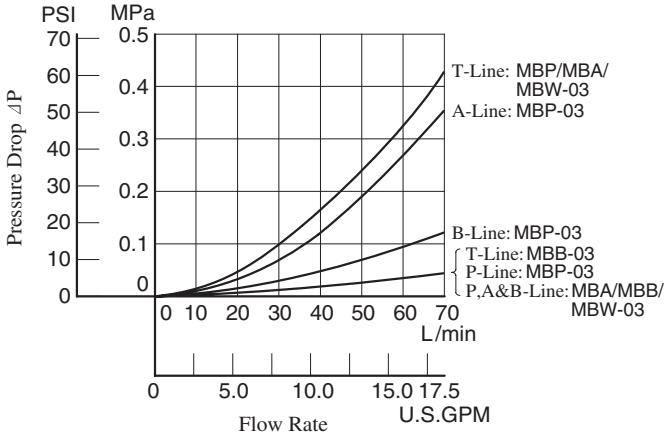

Min. Flow vs. Adjustment Pressure

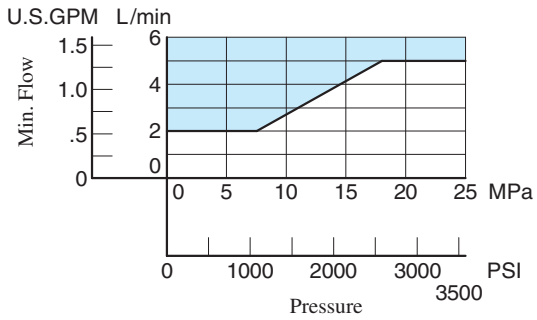

MBW-03-∗-30

DIMENSIONS IN MILLIMETRES (INCHES)

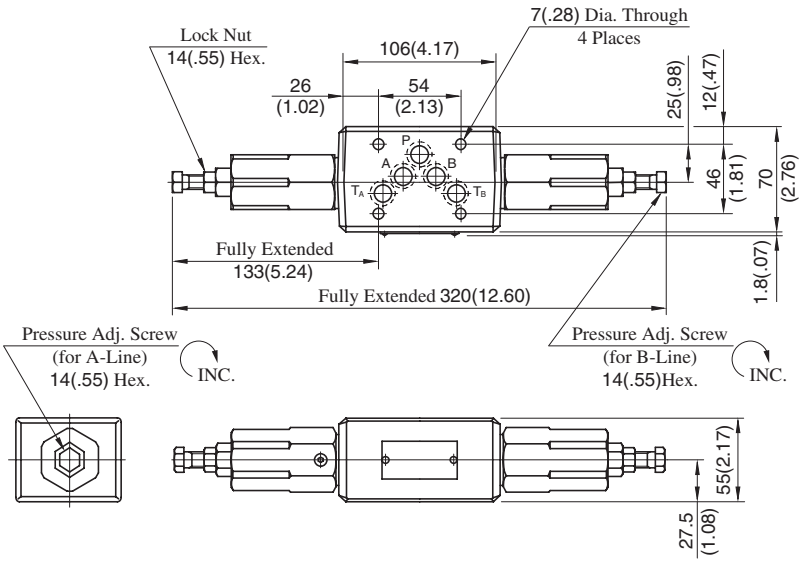

Approx. Mass.....3.8 kg (8.4 lbs.)

MBP-03-∗-30
MBA-03-∗-30

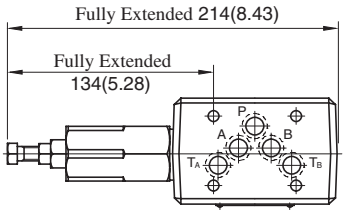

Approx. Mass.....3.1 kg (6.8 lbs.)

- For other dimensions, refer to "MBW-03" drawing left.

MBB-03-∗-30

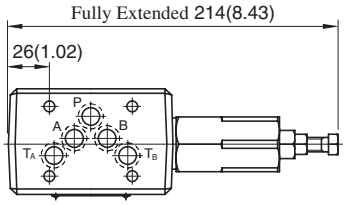

Approx. Mass.....3.1 kg (6.8 lbs.)

- For other dimensions, refer to "MBW-03" drawing left.

Spare Parts List

MBP-03-∗-30
MBA-03-∗-30

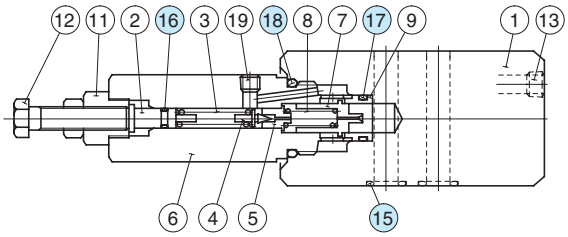

MBB-03-∗-30

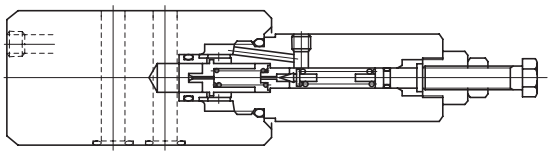

MBW-03-∗-30

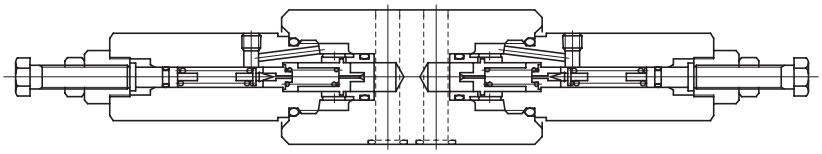

List of Seals

Item	Name of Parts	Part Numbers	Quantity			
			MBP-03	MBA-03	MBB-03	MBW-03
15	O-Ring	SO-NB-A014	5	5	5	5
16	O-Ring	SO-NA-P6	1	1	1	2
17	O-Ring	SO-NB-P16	1	1	1	2
18	O-Ring	SO-NB-P26	1	1	1	2

Note: When ordering seals, please specify the seal kit number from the table right.

List of Seal Kits

Valve Model Numbers	Seal kit Numbers
MBP-03	KS-MBP-03-30
MBA-03	
MBB-03	
MBW-03	KS-MBW-03-30

Reducing Modular Valves

Specifications

Model Numbers	Max. Operating Pressure MPa(PSI)	Max. Flow L/min (U.S.GPM)
MRP-03-*-30/3090 MRA-03-*-30/3090 MRB-03-*-30/3090	25 (3630)	70 (18.5) ★

★ In pressure adjustment range "H", if the pressure in the primary side is set above 20 MPa (2900 PSI) and the pressure in the secondary side is set below 10 MPa (1450 PSI), the maximum flow is limited to 50 L/min (13.2 U.S.GPM).

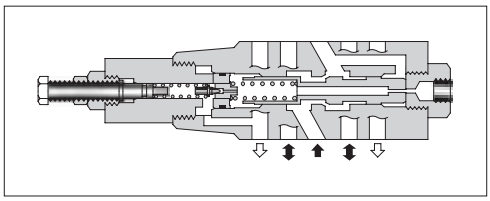

Model Number Designation

F-	MRP	-03	-B	-30	*
Special Seals	Series Number	Valve Size	Pres. Adj. Range MPa (PSI)	Design Number	Design Standard
F: Special Seals for Phosphate Ester Type Fluids (Omit if not required)	**MRP:** Reducing Valve for P-Line **MRA:** Reducing Valve for A-Line **MRB:** Reducing Valve for B-Line	**03**	**B:** 1-7 (145-1020) **H:** 3.5-24.5 (510-3550)	**30**	Refer to ★

★ Design Standards: None ..... Japanese Standard "JIS" and European Design Standard
90 ..... N. American Design Standard

Instructions

- The minimum adjustment pressure equals the lower limit of either pressure adjustment range (B, H) plus the tank line back pressure of the next page. This back pressure should include the value of the T-line pressure drop characteristics of the values stacked to the base plate side of the modular valve.
- To make pressure adjustment, loosen the lock nut and turn the pressure adjustment screw clockwise or anti-clockwise. For an increase of pressure, turn the screw clockwise. Be sure to re-tighten the lock nut firmly after making adjustment to the pressure.

Model Numbers	Graphic Symbols	Detailed Graphic Symbols
MRP-03	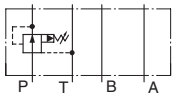	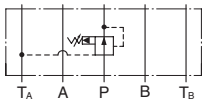
MRA-03	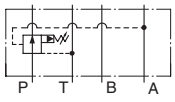	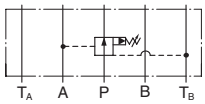
MRB-03	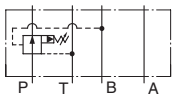	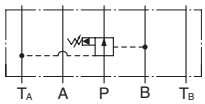

Typical Performance Characteristics

Hydraulic Fluid: Viscosity 35 mm^2/s (164 SSU), Specific Gravity 0.850

Pressure Drop

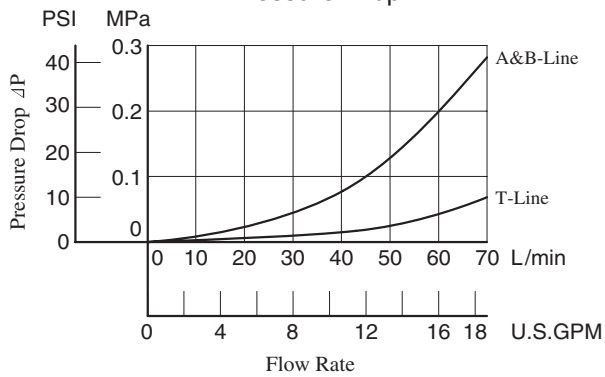

Nominal Override Characteristics

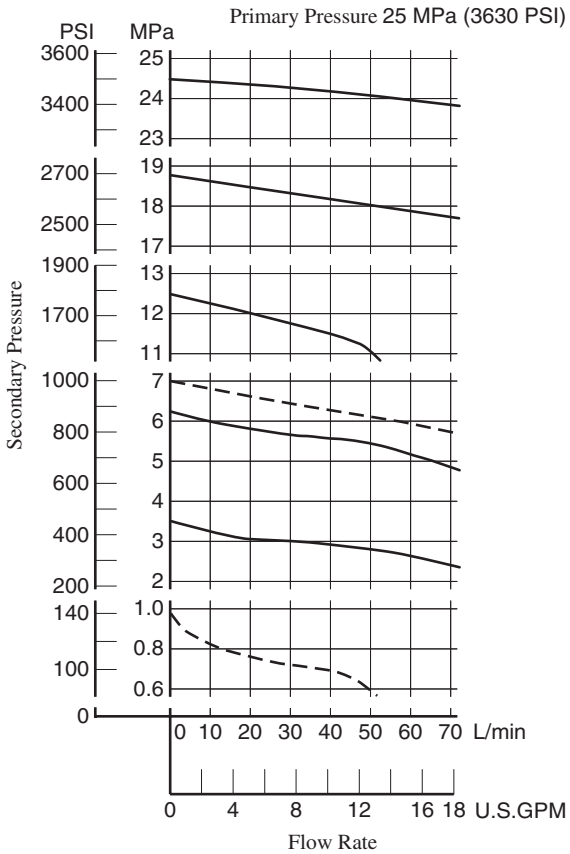

Pressure Adj. Range

---------- : "B"

———— : "H"

Pilot Flow

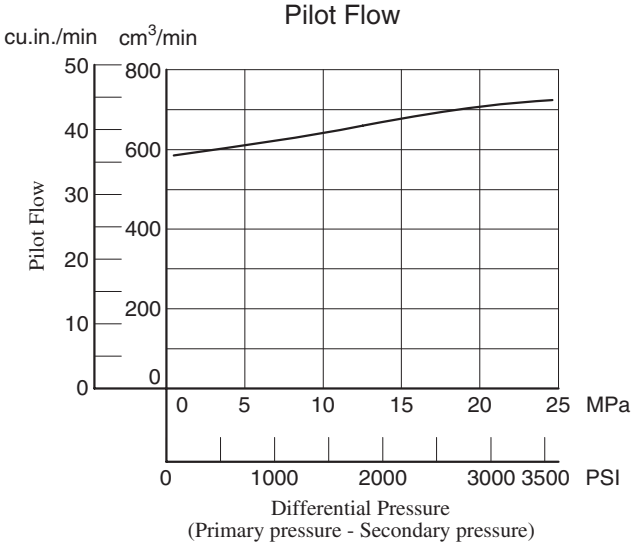

Pres. Drop at Spool Fully Open (P-Line)

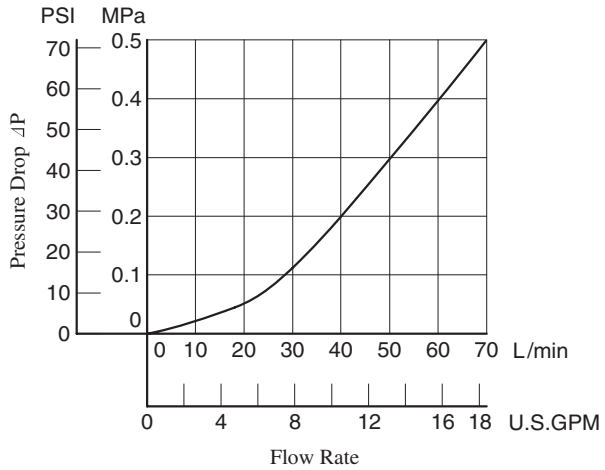

MRP-03-∗-30/3090
MRB-03-∗-30/3090

DIMENSIONS IN MILLIMETRES (INCHES)

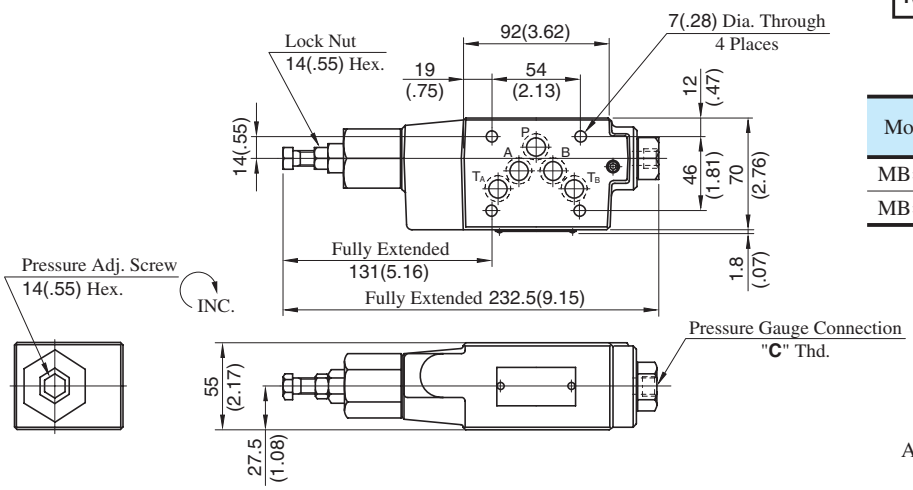

Model Numbers	Thread Size "C" Thd.
MB∗-01-∗-30	Rc 1/4 = 1/4 BSP.Tr
MB∗-01-∗-3090	1/4 NPT

Approx. Mass.....3.3 kg (7.5 lbs.)

MRA-03-∗-30/3090

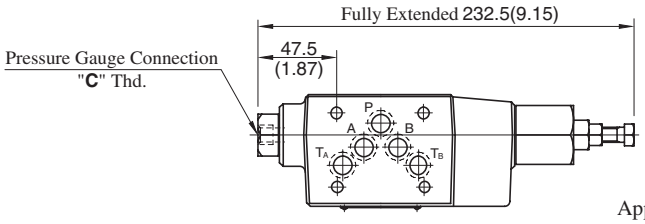

Approx. Mass.....3.3 kg (7.5 lbs.)

• For other dimensions, refer to "MRP-03" drawing above.

Spare Parts List

MRP-03-∗-30/3090

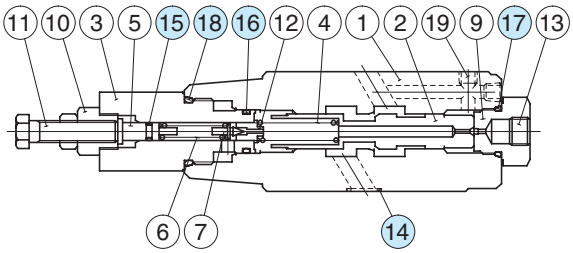

MRB-03-∗-30/3090

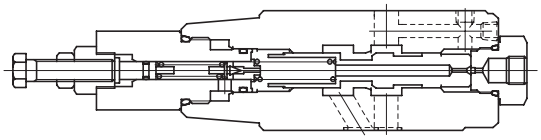

MRA-03-∗-30/3090

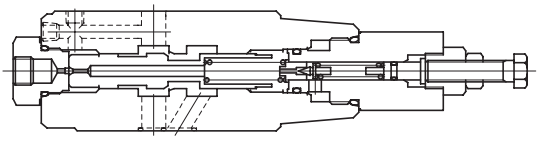

List of Seals

Item	Name of Parts	Part Numbers	Qty.	Remarks
14	O-Ring	SO-NB-A014	5	Included in Seal Kit Kit No.: KS-MRP-03-30
15	O-Ring	SO-NA-P6	1	
16	O-Ring	SO-NB-P16	1	
17	O-Ring	SO-NB-P18	1	
18	O-Ring	SO-NB-P26	1	

Reducing Modular Valves For Low Pressure Setting

Specifications

Model Numbers	Max. Operating Pressure MPa (PSI)	Pres. Adj. Range MPa (PSI)	Max. Flow L/min (U.S.GPM)
MRLP-03-10/1080/1090 MRLA-03-10/1080/1090 MRLB-03-10/1080/1090	7 (1020)	0.2-6.5 (29-940)	50 (13.2) ★

★ When pressure setting is less than 0.8 MPa (116 PSI), maximum flow decreases. See "Min. Adjustment Pressure vs. Max. Flow" on the next page for the appropriate range.

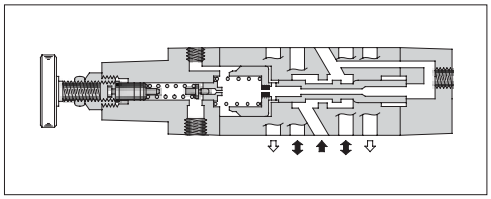

Model Number Designation

F-	MRLP	-03	-10	*
Special Seals	Series Number	Valve Size	Design Number	Design Standard
F: Special Seals for Phosphate Ester Type Fluids (Omit if not required)	**MRLP** : Low Pressure Setting Type Reducing Valve for P-Line **MRLA** : Low Pressure Setting Type Reducing Valve for A-Line **MRLB** : Low Pressure Setting Type Reducing Valve for B-Line	**03**	**10**	Refer to ★

★ Design Standards: None ..... Japanese Standard "JIS"
80 ..... European Design Standard
90 ..... N. American Design Standard

Instructions

- If there is a pressure in drain line, it is added to the secondary setting pressure. Hence, drain line must be connected to tank directly with a low back pressure close to atmospheric pressure.
- To make pressure adjustment, loosen the lock nut and turn the pressure adjustment handle clockwise or anti-clockwise. For an increase of pressure, turn the handle clockwise. Be sure to re-tighten the lock nut firmly after making adjustment to the pressure.

Model Numbers	Graphic Symbols	Detailed Graphic Symbols
MRLP-03	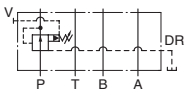	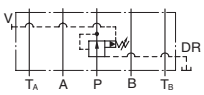
MRLA-03	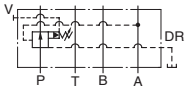	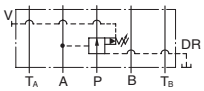
MRLB-03	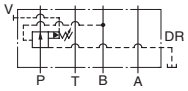	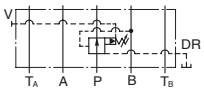

Typical Performance Characteristics

Hydraulic Fluid: Viscosity 35 mm^2/s (164 SSU), Specific Gravity 0.850

Pres. Drop at Spool Fully Open (P-Line)

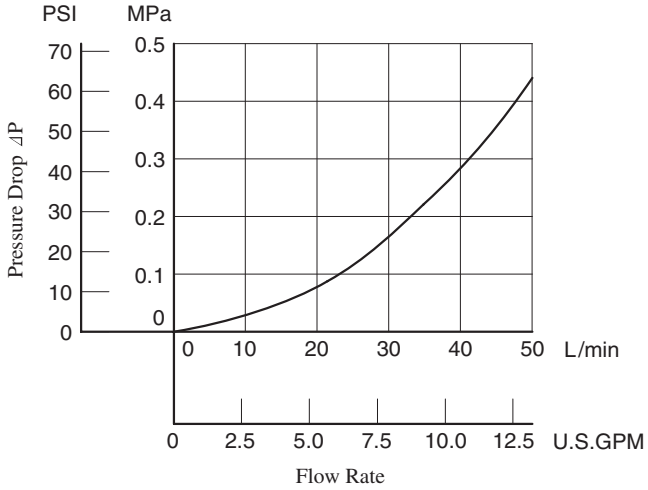

Pressure Drop

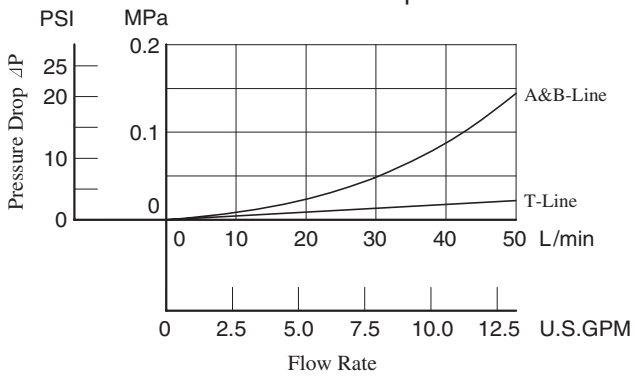

Min. Adjustment Pressure vs. Max. Flow

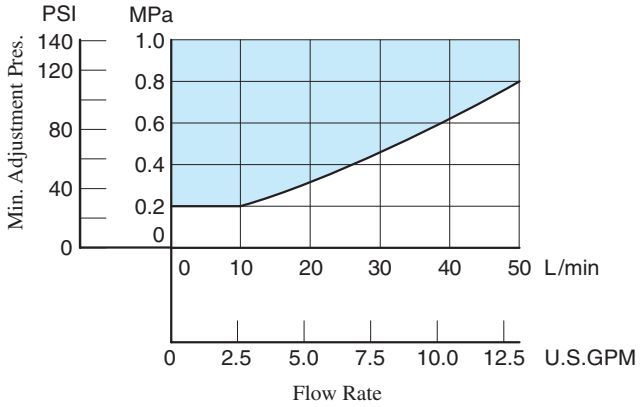

MRLP-03-10/1080/1090
MRLB-03-10/1080/1090

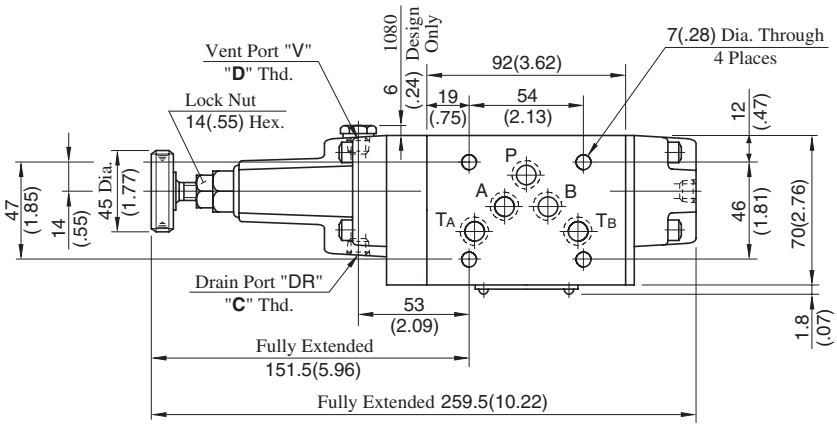

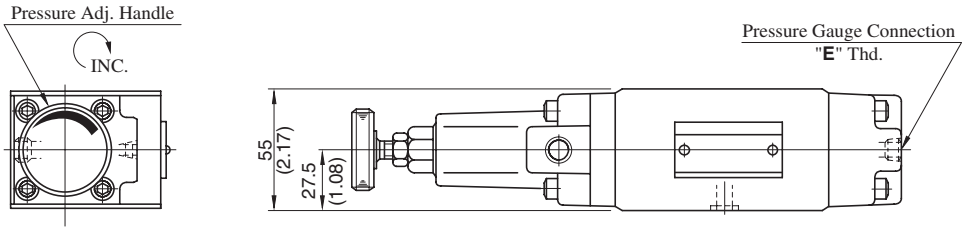

Approx. Mass.....4.5 kg (9.9 lbs.)

Model Numbers	Thread Size		
	"C" Thd.	"D" Thd.	"E" Thd.
MRL∗-03-10	Rc 1/4	Rc 1/8	Rc 1/4
MRL∗-03-1080	1/4 BSP.F	1/8 BSP.F	1/4 BSP.Tr
MRL∗-03-1090	1/4 NPT	1/8 NPT	1/4 NPT

DIMENSIONS IN MILLIMETRES (INCHES)

MRLA-03-10/1080/1090

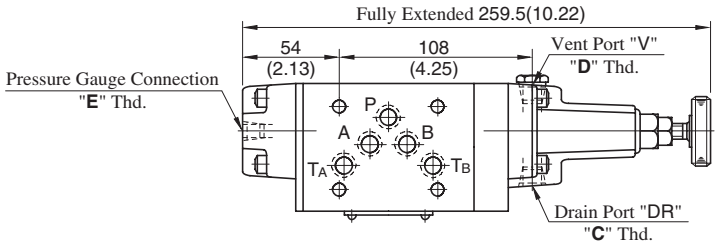

Approx. Mass.....4.5 kg (9.9 lbs.)

- For other dimensions, refer to "MRLP-03" drawing above.

Spare Parts List

MRLP-03-10/1080/1090
MRLB-03-10/1080/1090

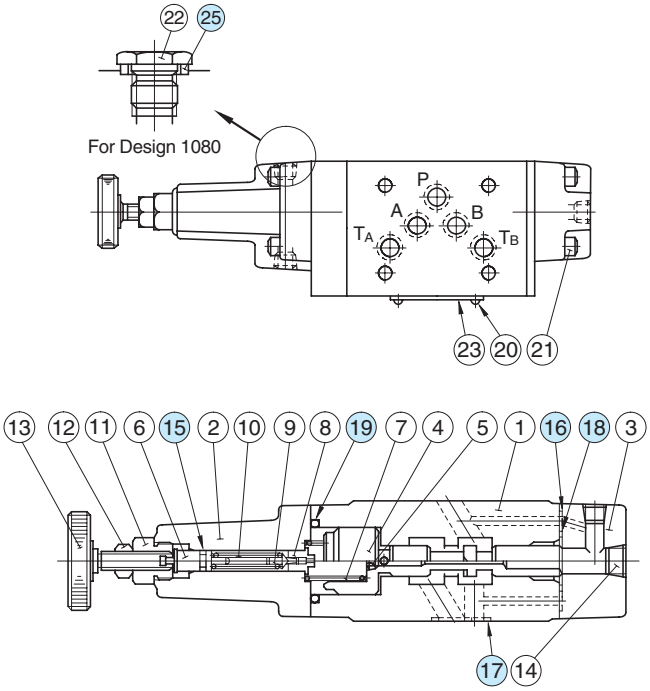

MRLA-03-10/1080/1090

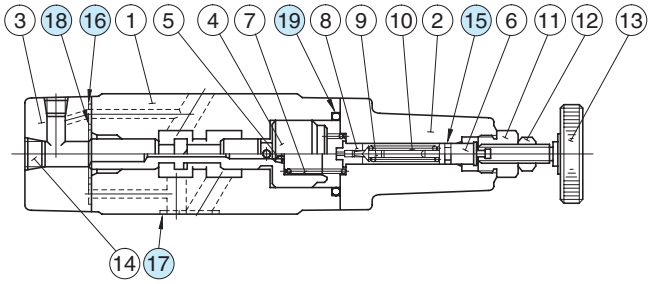

List of Seals

Item	Name of Parts	Part Numbers	Qty.	Remarks
15	O-Ring	SO-NA-P6	1	Included in Seal Kit Kit No.:KS-MRLP-03-10
16	O-Ring	SO-NB-P6	2	
17	O-Ring	SO-NB-A014	5	
18	O-Ring	SO-NB-P22	1	
19	O-Ring	SO-NB-P32	1	
25	Bonded Seal	SG-FB-1/8	1	

Note: No bonded seal are included in seal kits.

Sequence Modular Valves/Counterbalance Modular Valves

Specifications

Model Numbers	Max. Operating Pressure MPa (PSI)	Max. Flow L/min (U.S.GPM)	Max. Free Flow L/min (U.S.GPM)
MHP-03-∗-20	25 (3630)	50 (13.2)	——
MHA-03-∗-20 MHB-03-∗-20			70 (18.5)

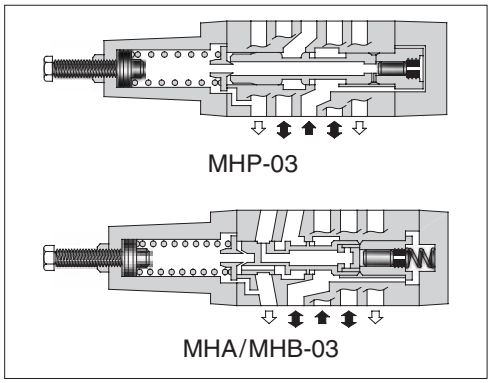

Model Number Designation

F-	MHA	-03	-C	-20	∗
Special Seals	Series Number	Valve Size	Pres. Adj. Range MPa (PSI)	Design Number	Design Standard
F: Special Seals for Phosphate Ester Type Fluids (Omit if not required)	**MHP**: Sequence Valve for P-Line	**03**	**N**: ∗-1.8 (∗-260) ★1 **A**: 1.8-3.5 (260-510) **B**: 3.5-7 (510-1020) **C**: 7-14 (1020-2030)	**20**	Refer to ★2
	MHA: Counterbalance Valve for A-Line **MHB**: Counterbalance Valve for B-Line			**20**	

★1. See the "Minimum Adjustment Pressure" of the next page for the item marked ∗.
★2. Design Standards: None ..... Japanese Standard "JIS", European Design Standard and N. American Design Standard

Instructions

- The minimum adjustment pressure equals the value obtained from the minimum adjustment pressure characteristics plus the tank line back pressure of the next page. This back pressure should include the value of the T-line pressure drop characteristics of the valves stacked to the base plate side of the modular valve.
- To make pressure adjustment, loosen the lock nut and turn the pressure adjustment screw clockwise or anti-clockwise. For an increase of pressure, turn the screw clockwise. Be sure to re-tighten the lock nut firmly after making adjustment to the pressure.

Model Numbers	Graphic Symbols	Detailed Graphic Symbols
MHP-03	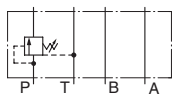	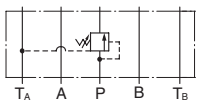
MHA-03	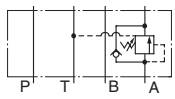	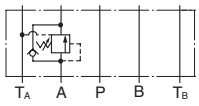
MHB-03	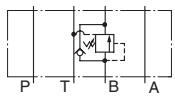	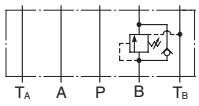

Typical Performance Characteristics

Hydraulic Fluid: Viscosity 35 mm^2/s (164 SSU), Specific Gravity 0.850

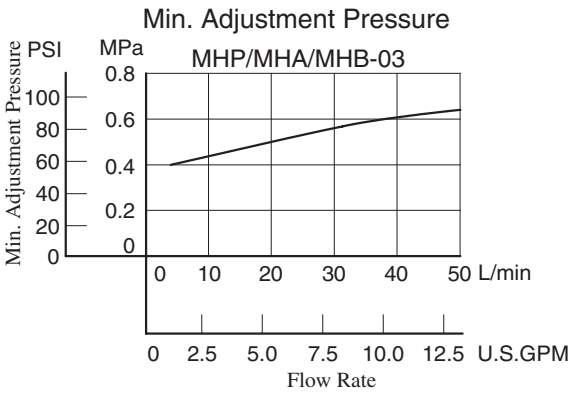

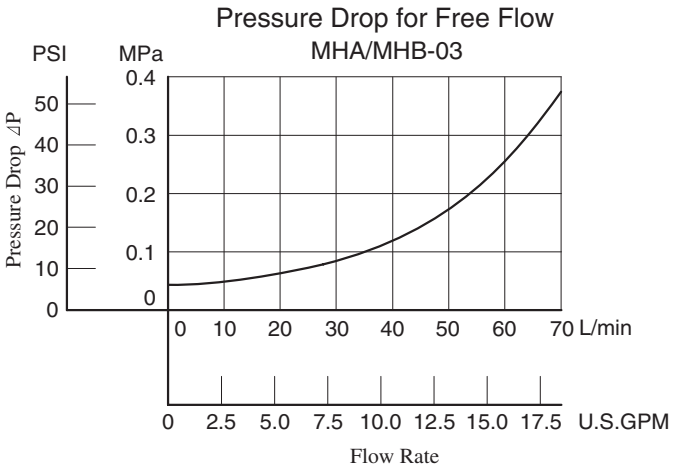

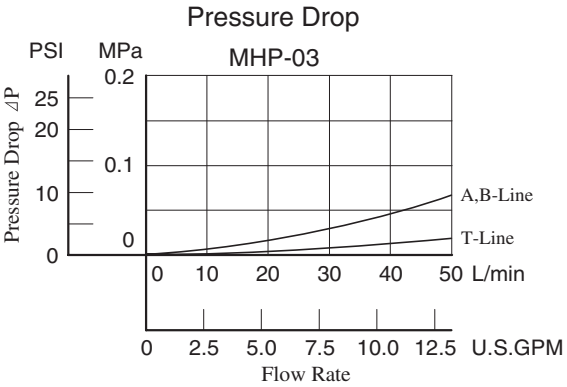

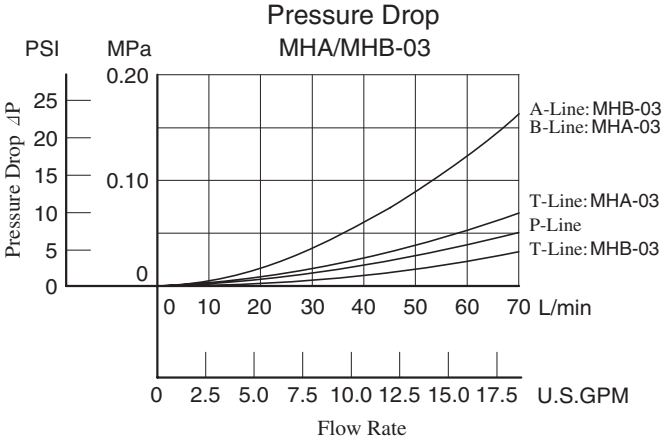

MHP-03-∗-20

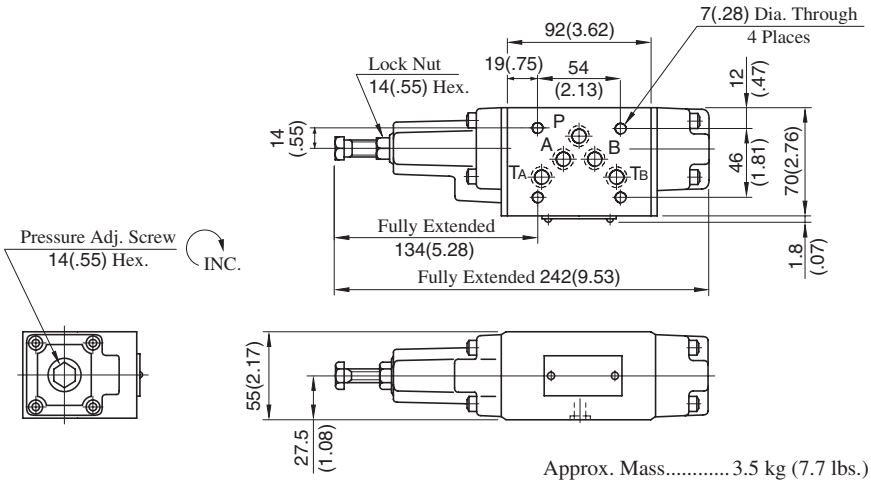

Approx. Mass.....3.5 kg (7.7 lbs.)

DIMENSIONS IN MILLIMETRES (INCHES)

MHA-03-∗-20

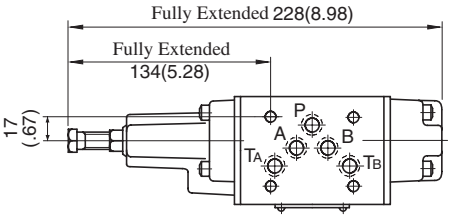

Approx. Mass.....3.5 kg (7.7 lbs.)

MHA-03-∗-20

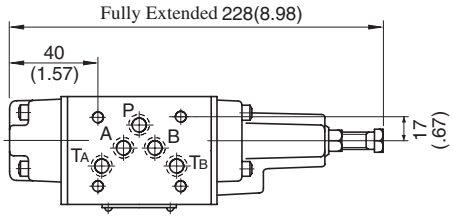

Approx. Mass.....3.5 kg (7.7 lbs.)

● For other dimensions, refer to "MHP-03" drwaing above.

Spare Parts List

MHP-03-∗-20

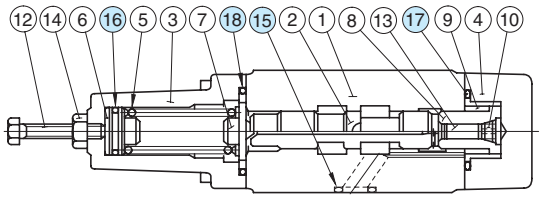

MHA-03-∗-20

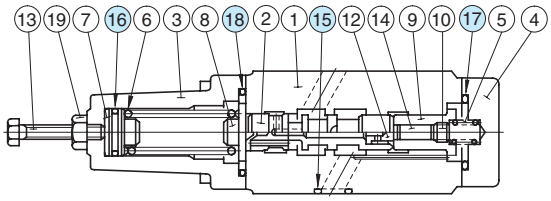

MHB-03-∗-20

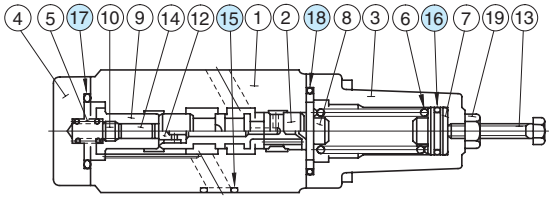

● List of Seals

MHP-03, MHA-03

Item	Name of Parts	Part Numbers	Qty.	Remarks
15	O-Ring	SO-NB-A014	5	Included in Seal Kit Kit No.:KS-MHP-03-20
16	O-Ring	SO-NB-P16	1	
17	O-Ring	SO-NB-P29	1	
18	O-Ring	SO-NB-P32	1	

MHB-03

Item	Name of Parts	Part Numbers	Qty.	Remarks
15	O-Ring	SO-NB-A014	5	Included in Seal Kit Kit No.:KS-MHB-03-20
16	O-Ring	SO-NA-P16	1	
17	O-Ring	SO-NB-P29	1	
18	O-Ring	SO-NB-P32	1	

Pressure and Temperature Compensated Flow Control (and Check) Modular Valves

Specifications

Model Numbers	Max. Operating Pressure MPa (PSI)	Max. Metred Flow L/min (U.S.GPM)	Max. Free Flow L/min (U.S.GPM)
MFP-03-11	16 (2320)	50 (13.2)	——
MFA-03-∗-11 MFB-03-∗-11 MFW-03-∗-11			70 (18.5)

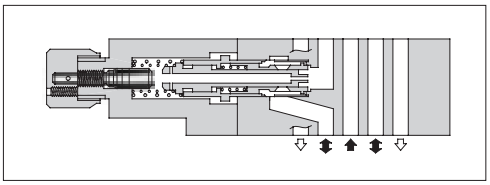

Model Number Designation

F-	MFA	-03	-X	-11	∗
Special Seals	Series Number	Valve Size	Direction of Flow	Design Number	Design Standard
F: Special Seals for Phosphate Ester Type Fluids (Omit if not required)	**MFP** : Flow Control Valve for P-Line	**03**	——	**11**	Refer to ★
	MFA : Flow Control and Check Valve for A-Line **MFB** : Flow Control and Check Valve for B-Line **MFW** : Flow Control and Check Valve for A&B-Lines		**X**: Metre-out **Y**: Metre-in	**11**	

★ Design Standards: None ..... Japanese Standard "JIS", European Design Standard and N. American Design Standard

Instructions

- To make flow rate adjustment, loosen locking screw for the dial and turn the flow adjustment dial clockwise or anti-clockwise. For a decrease of flow, turn the dial clockwise. Be sure to re-tighten the locking screw firmly after the adjustment of the flow rate.

Model No.	Graphic Symbols	Detailed Graphic Symbols
MFP-03	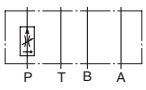	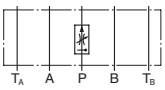
Model No.	Metre-out	
MFA-03-X	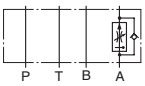	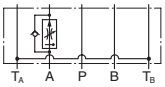
MFB-03-X	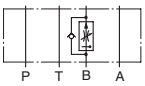	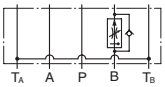
MFW-03-X	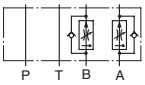	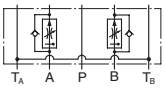

Model No.	Graphic Symbols	Detailed Graphic Symbols
	Metre-in	
MFA-03-Y	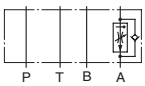	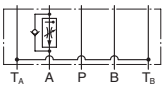
MFB-03-Y	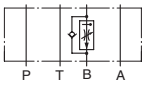	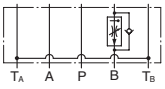
MFW-03-Y	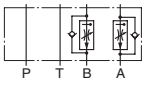	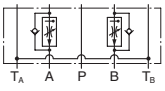

Typical Performance Characteristics

Hydraulic Fluid: Viscosity 35 mm²/s (164 SSU), Specific Gravity 0.850

Min. Required Pressure Difference

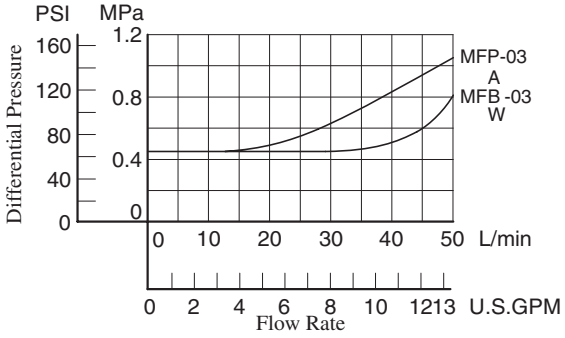

Pressure Drop for Free Flow

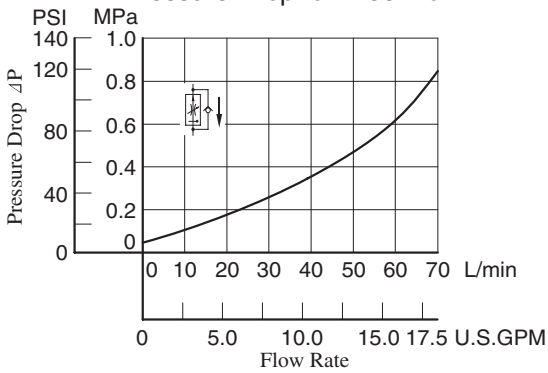

Metred Flow vs. Dial Position

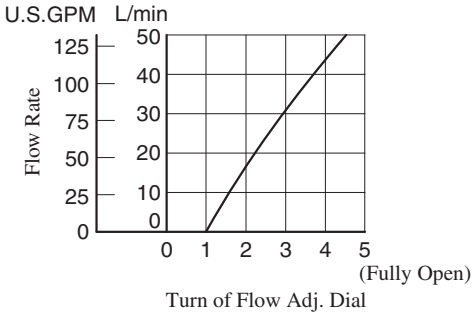

Pressure Drop

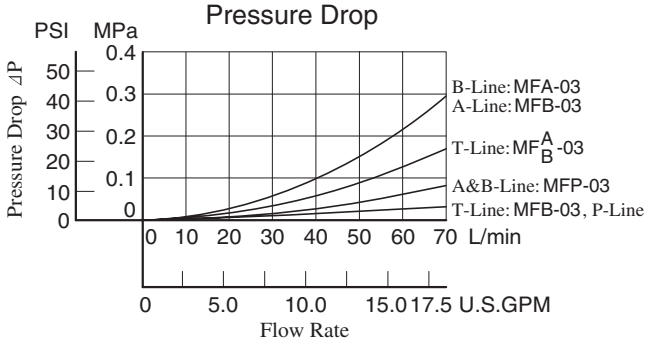

Min. Metred Flow

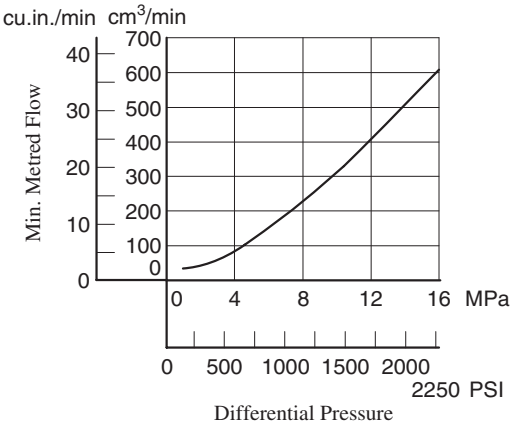

Metred Flow vs. Differential Pressure

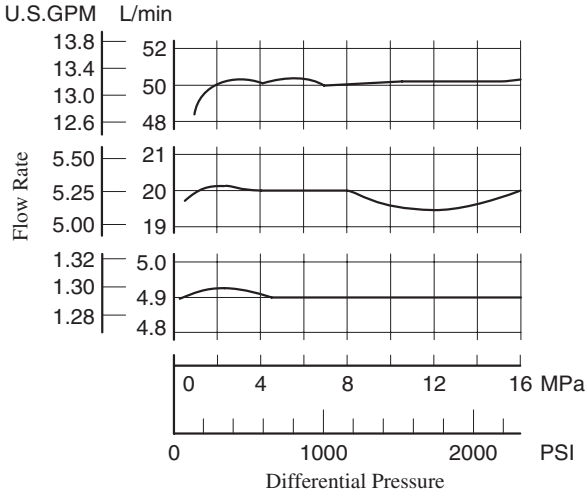

Metred Flow vs. Viscosity

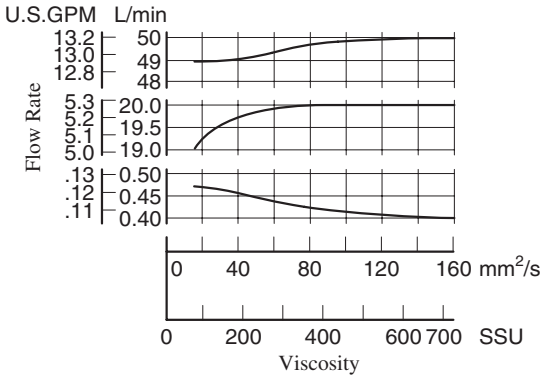

MFP-03-11

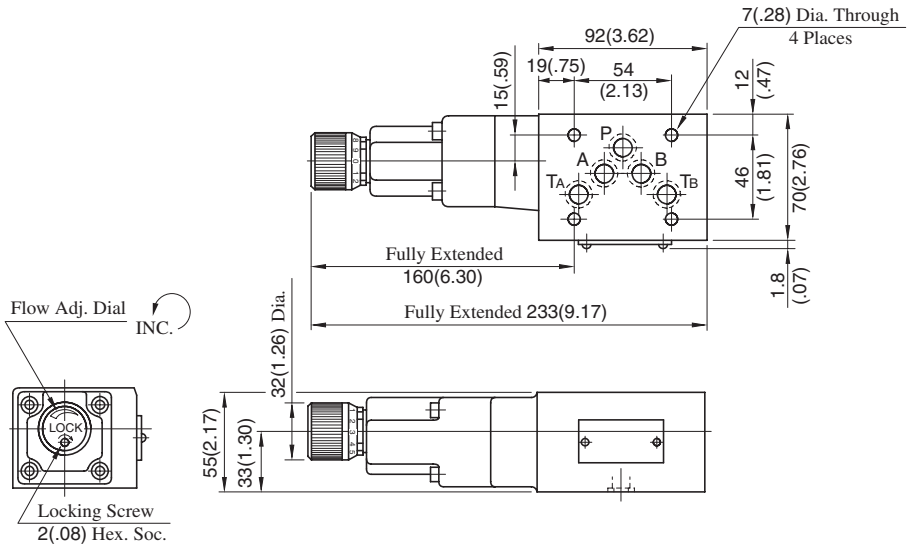

Approx. Mass.....4.2 kg (9.3 lbs.)

MFW-03-$^{X}_{Y}$-11

DIMENSIONS IN MILLIMETRES (INCHES)

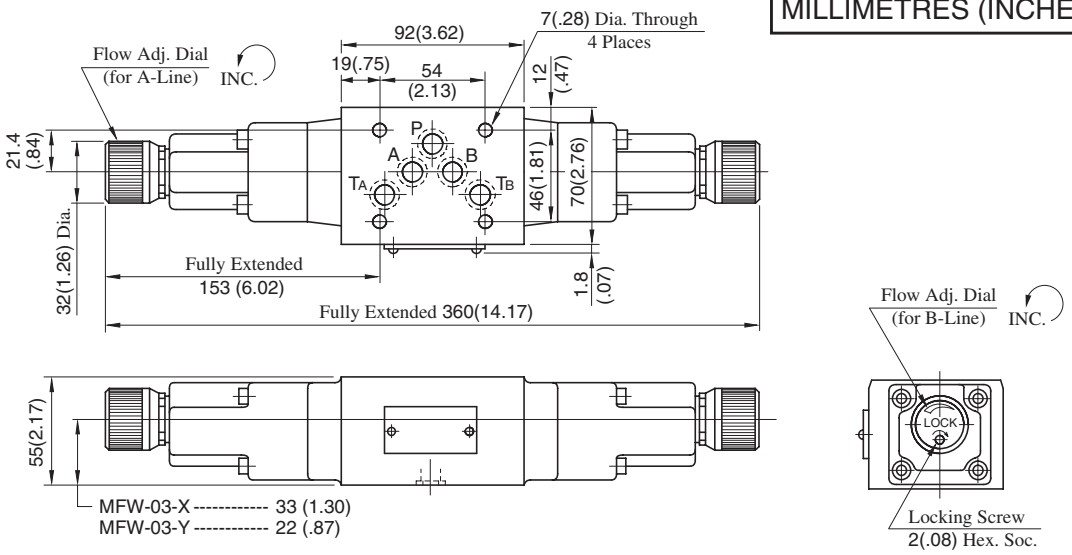

Approx. Mass.....5.2 kg (11.5 lbs.)

MFA-03-$^{X}_{Y}$-11

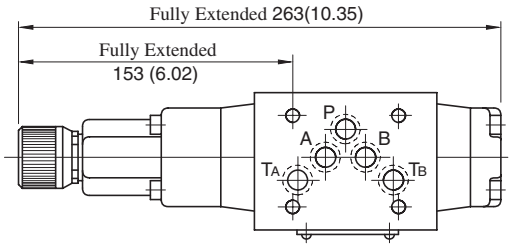

Approx. Mass.....4.1 kg (9.0 lbs.)

MFB-03-$^{X}_{Y}$-11

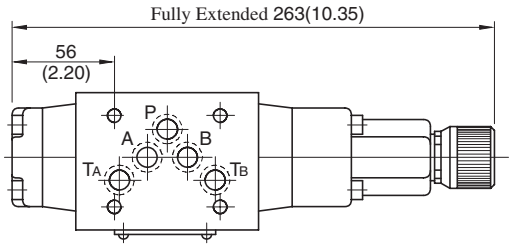

Approx. Mass.....4.1 kg (9.0 lbs.)

- For other dimensions, refer to "MFW-03" drawing above.

Spare Parts List

MFP-03-11

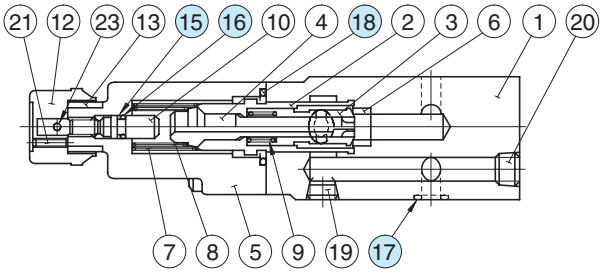

MFA-03-$^{X}_{Y}$-11

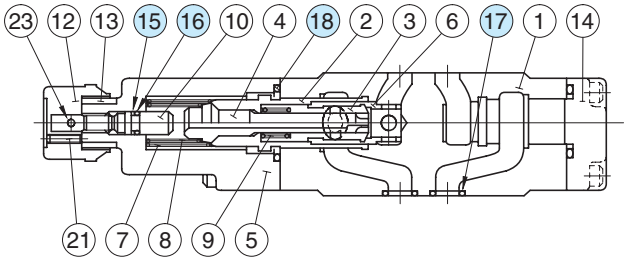

MFB-03-$^{X}_{Y}$-11

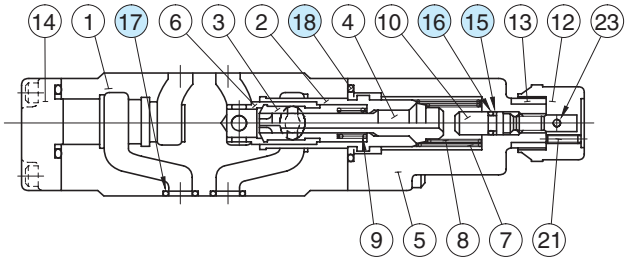

MFW-03-$^{X}_{Y}$-11

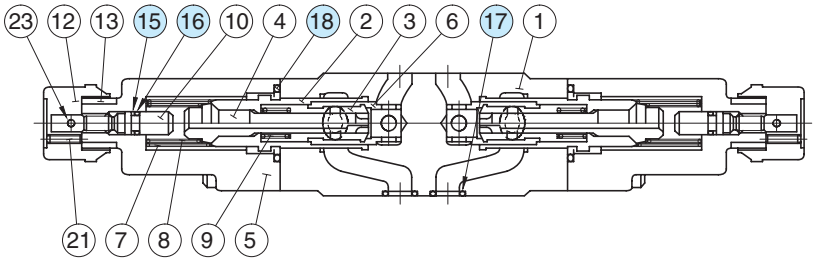

List of Seals

Item	Name of Parts	Part Numbers	Quantity			
			MFP-03	MFA-03	MFB-03	MFW-03
15	Back Up Ring	SO-BB-P6	1	1	1	2
16	O-Ring	SO-NA-P6	1	1	1	2
17	O-Ring	SO-NB-A014	5	5	5	5
18	O-Ring	SO-NB-P28	1	2	2	2

Note: When ordering seals, please specify the seal kit number from the table right.

List of Seal Kits

Valve Model Numbers	Seal Kit Numbers
MFP-03	KS-MFP-03-10
MFA-03	KS-MFA-03-10
MFB-03	
MFW-03	KS-MFW-03-10

Temperature Compensated Throttle and Check Modular Valves

Specifications

Model Numbers	Max. Operating Pressure MPa (PSI)	Max. Differential Pressure MPa (PSI)	Max. Metred Flow L/min (U.S.GPM)	Min. Metred Flow L/min (U.S.GPM)	Max. Free Flow L/min (U.S.GPM)
MSTA-03-X-20 MSTB-03-X-20 MSTW-03-X-20	25 (3630)	25 (3630)	70 (18.5)	2 (.53) {1 (.26)}★	70 (18.5)

★The figures in parentheses are the values when the differential pressure is less than 3.5 MPa (510 PSI).

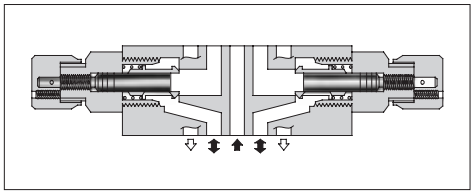

Model Number Designation

F-	MSTA	-03	-X	-20	*
Special Seals	Series Number	Valve Size	Direction of Flow	Design Number	Design Standard
F: Special Seals for Phosphate Ester Type Fluids (Omit if not required)	**MSTA** : Temperature Compensated Throttle and Check Valve for A-Line **MSTB** : Temperature Compensated Throttle and Check Valve for B-Line **MSTW** : Temperature Compensated Throttle and Check Valve for A&B-Lines	**03**	**X**: Metre-out	**20**	Refer to ★

★ Design Standards: None ..... Japanese Standard "JIS", European Design Standard and N. American Design Standard

Instructions

- To make flow rate adjustment, loosen locking screw for the dial and turn the flow adjustment dial clockwise or anti-clockwise. For a decrease of flow, turn the dial clockwise. Be sure to re-tighten the locking screw firmly after the adjustment of the flow rate.

Model No.	Graphic Symbols	Detailed Graphic Symbols
	Metre-out	
MSTA-03-X		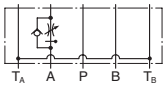
MSTB-03-X	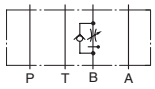	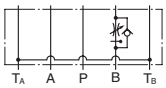
MSTW-03-X	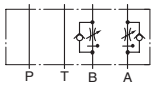	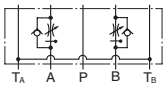

Typical Performance Characteristics

Hydraulic Fluid: Viscosity 35 mm²/s (164 SSU), Specific Gravity 0.850

Pressure Drop

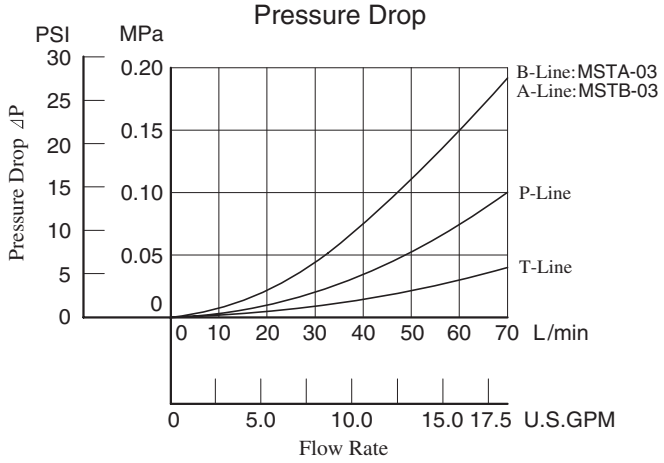

Metred Flow vs. Dial Position

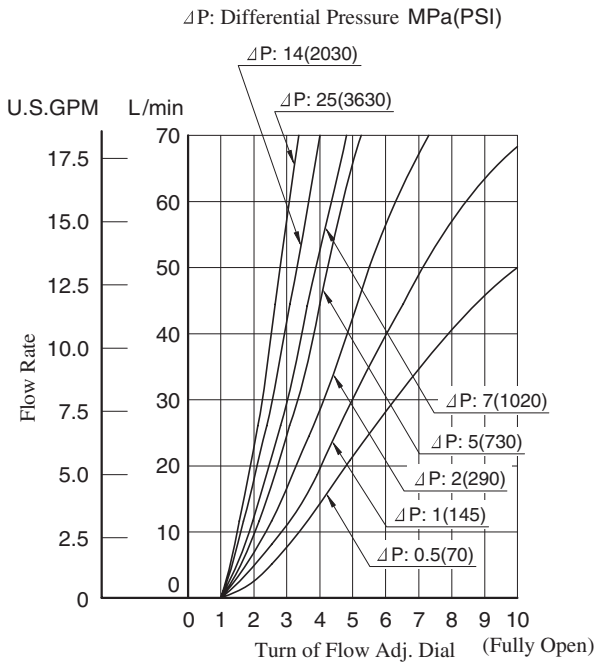

Pressure Drop for Free Flow

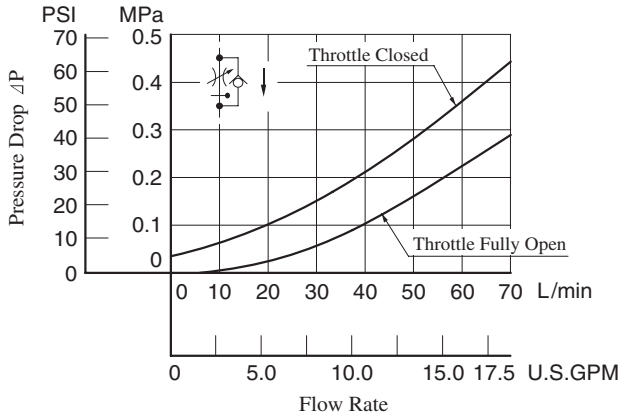

Metred Flow vs. Viscosity

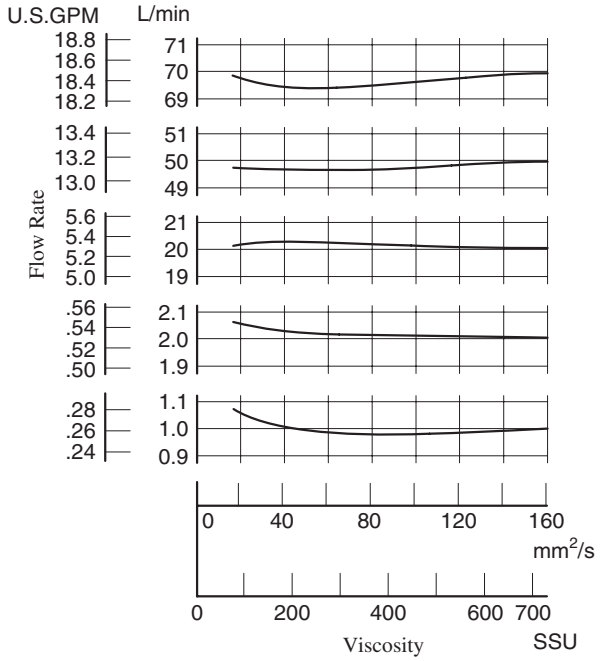

Pressure Drop at Throttle Fully Open

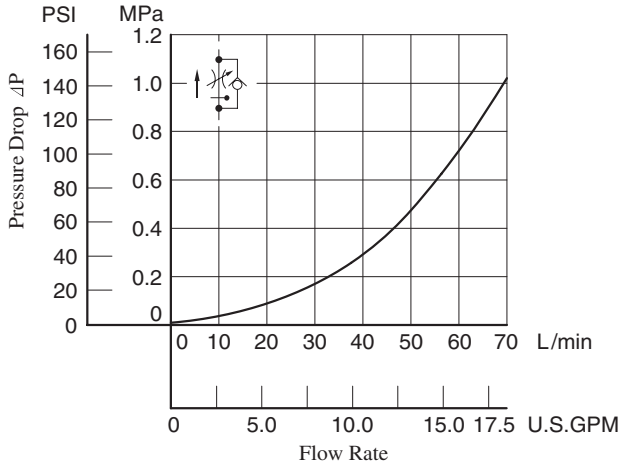

MSTW-03-X-20

DIMENSIONS IN MILLIMETRES (INCHES)

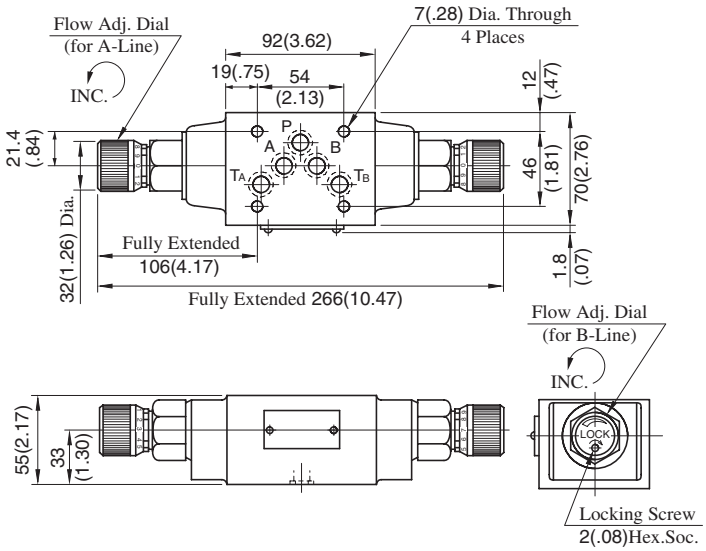

Approx. Mass.....3.7 kg (8.2 lbs.)

MSTA-03-X-20

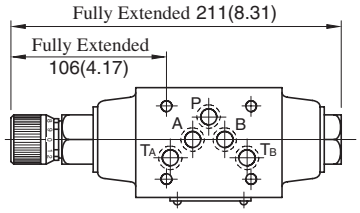

Approx. Mass.....3.5 kg (7.7 lbs.)

- For other dimensions, refer to "MSTW-03" drawing left.

MSTB-03-X-20

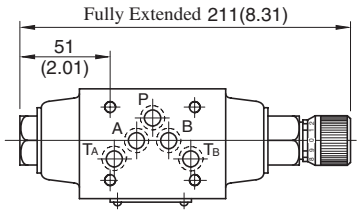

Approx. Mass.....3.5 kg (7.7 lbs.)

- For other dimensions, refer to "MSTW-03" drawing left.

Spare Parts List

MSTA-03-X-20

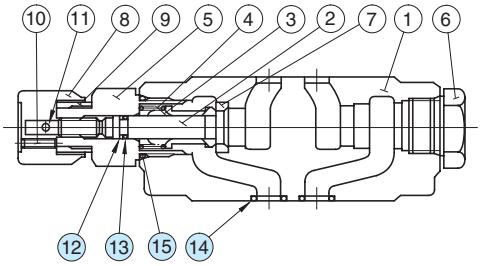

MSTB-03-X-20

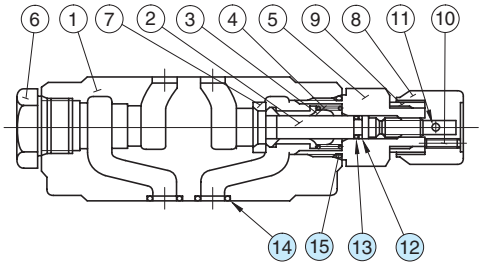

MSTW-03-X-20

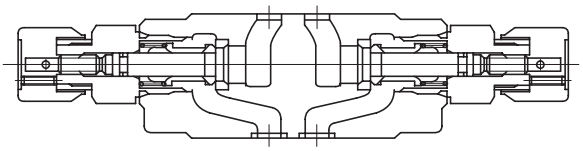

List of Seals

Item	Name of Parts	Part Numbers	Quantity		
			MSTA-03	MSTB-03	MSTW-03
12	Back Up Ring	900-VK411915-2	1	1	2
13	O-Ring	SO-NA-P7	1	1	2
14	O-Ring	SO-NB-A014	5	5	5
15	O-Ring	SO-NB-P24	2	2	2

Note: When ordering seals, please specify the seal kit number from the table right.

List of Seal Kits

Valve Model Numbers	Seal Kit Numbers
MSTA-03	KS-MSTA-03-20
MSTB-03	
MSTW-03	KS-MSTW-03-20

Throttle Modular Valves

Specifications

Model Number	Max. Operating Pressure MPa (PSI)	Max. Flow L/min (U.S.GPM)
MSP-03-30	25 (3630)	70 (18.5) ★

★ Maximum flow decreases when the differential pressure is less than 1 MPa (145 PSI).
See "Pressure Drop at Throttle Fully Open".

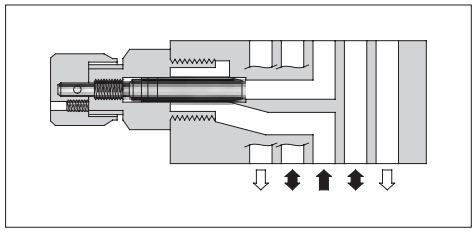

Model Number Designation

F-	MSP	-03	-30	✻
Special Seals	Series Number	Valve Size	Design Number	Design Standard
F: Special Seals for Phosphate Ester Type Fluids (Omit if not required)	**MSP** : Throttle Valve for P-Line	**03**	**30**	Refer to ★

★ Design Standards: None ..... Japanese Standard "JIS", European Design Standard and N. American Design Standard

Graphic Symbol

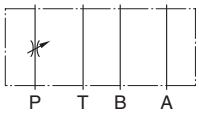

Detailed Graphic Symbol

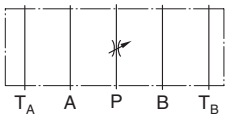

Typical Performance Characteristics

Hydraulic Fluid: Viscosity 35 mm^2/s (164 SSU), Specific Gravity 0.850

Pressure Drop

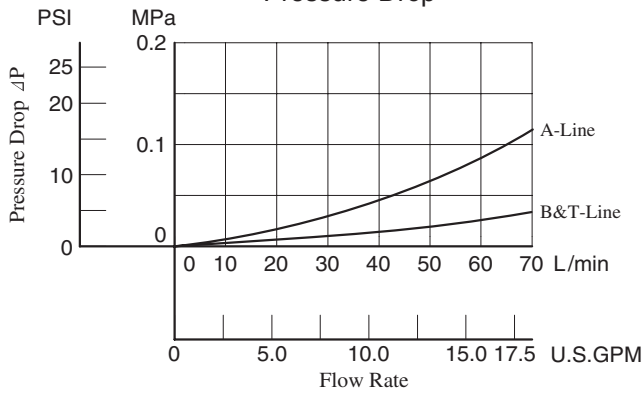

Pressure Drop at Throttle Fully Open

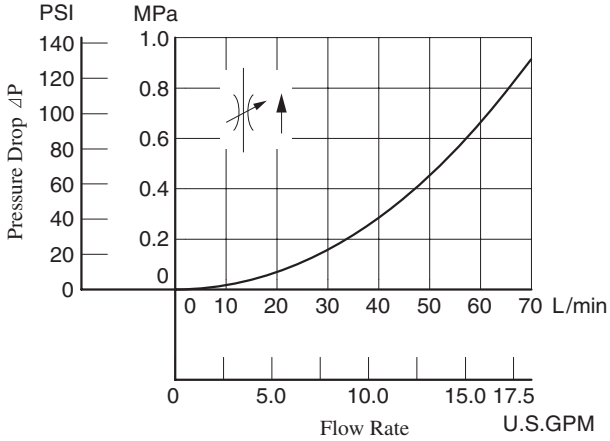

Metred Flow vs. Dial Position

⊿P: Differential Pressure MPa (PSI)

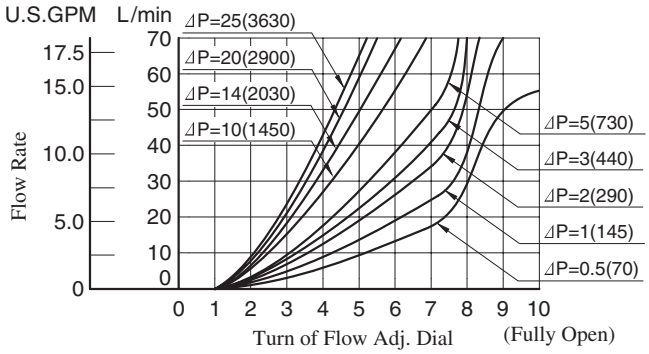

Instructions

- To make flow rate adjustment, loosen locking screw for the dial and turn the flow adjustment dial clockwise or anti-clockwise. For a decrease of flow, turn the dial clockwise. Be sure to re-tighten the locking screw firmly after the adjustment of the flow rate.

MSP-03-30

DIMENSIONS IN MILLIMETRES (INCHES)

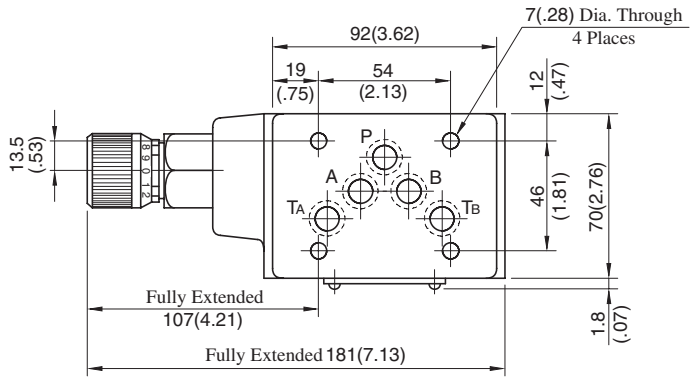

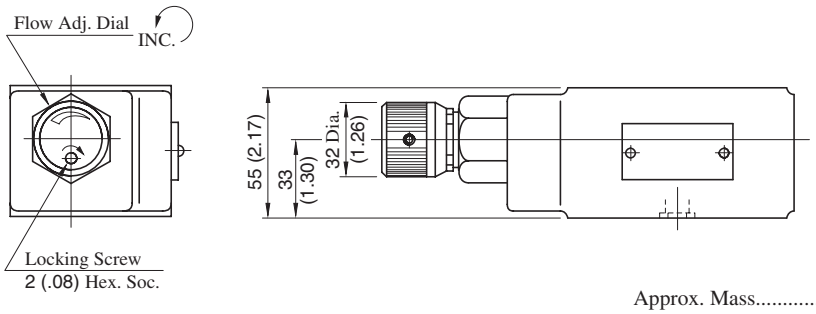

Approx. Mass.....3.0 kg (6.6 lbs.)

Spare Parts List

MSP-03-30

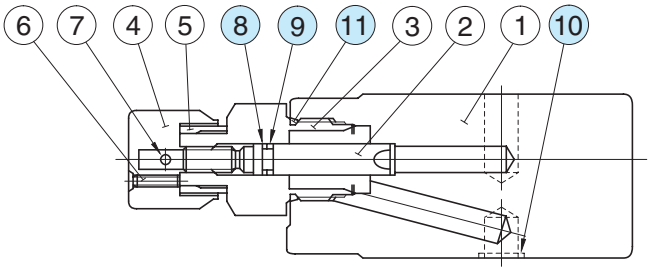

List of Seals

Item	Name of Parts	Part Numbers	Qty.	Remarks
8	Back Up Ring	900-VK411915-2	1	Included in Seal Kit Kit No.: KS-MSP-03-30
9	O-Ring	SO-NA-P7	1	
10	O-Ring	SO-NB-A014	5	
11	O-Ring	SO-NB-P24	1	

Check and Throttle Modular Valves

Specifications

Model Number	Max. Operating Pressure MPa (PSI)	Max. Flow L/min (U.S.GPM)
MSCP-03-20	25 (3630)	70 (18.5) ★

★ Maximum flow decreases when the differential pressure is less than 1 MPa (145 PSI).
See "Pressure Drop at Throttle Fully Open".

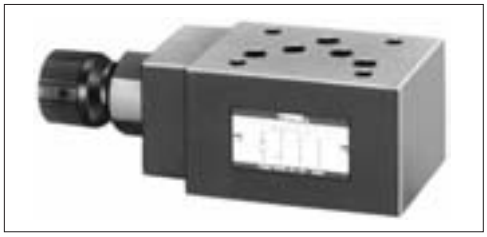

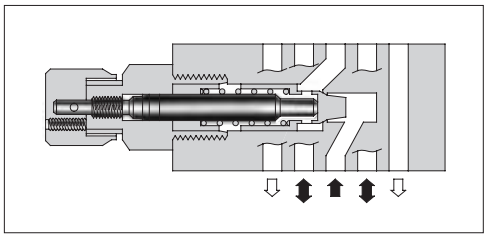

Model Number Designation

F-	MSCP	-03	-20	*
Special Seals	Series Number	Valve Size	Design Number	Design Standard
F: Special Seals for Phosphate Ester Type Fluids (Omit if not required)	**MSCP** : Check and Throttle Valve for P-Line	**03**	**20**	Refer to ★

★ Design Standards: None ..... Japanese Standard "JIS", European Design Standard and N. American Design Standard

Graphic Symbol

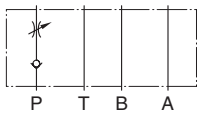

Detailed Graphic Symbol

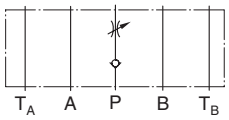

Typical Performance Characteristics

Hydraulic Fluid: Viscosity 35 mm^2/s (164 SSU), Specific Gravity 0.850

Pressure Drop

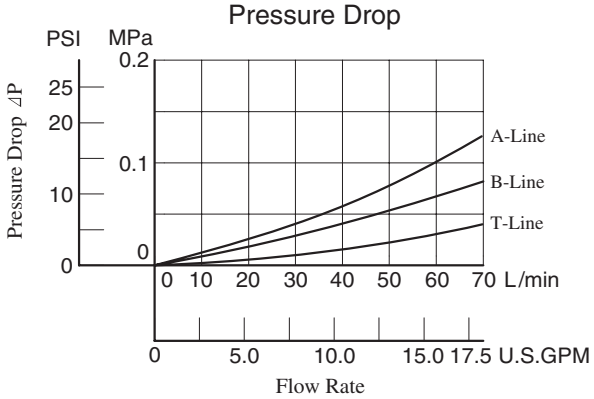

Pressure Drop at Throttle Fully Open

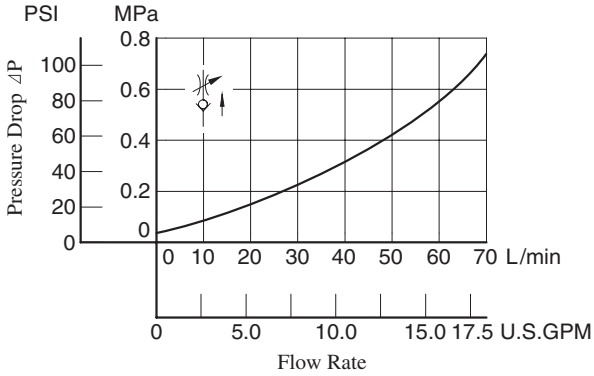

Metred Flow vs. Dial Position

⊿P: Differential Pressure MPa (PSI)

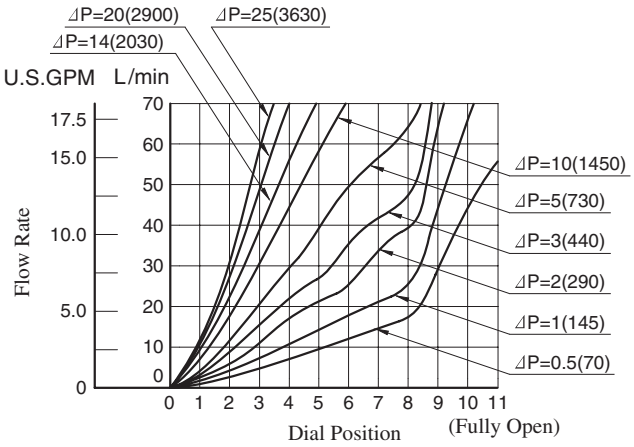

Instructions

- To make flow rate adjustment, loosen locking screw for the dial and turn the flow adjustment dial clockwise or anti-clockwise. For a decrease of flow, turn the dial clockwise. Be sure to re-tighten the locking screw firmly after the adjustment of the flow rate.

MSCP-03-20

DIMENSIONS IN MILLIMETRES (INCHES)

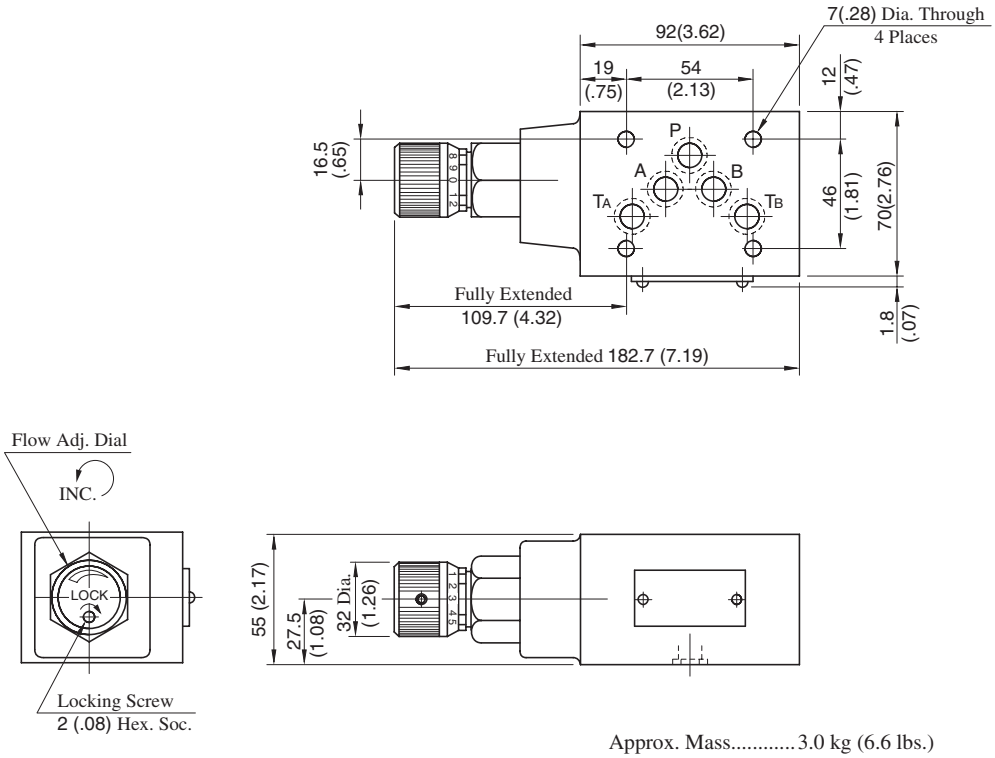

Approx. Mass.....3.0 kg (6.6 lbs.)

Spare Parts List

MSCP-03-20

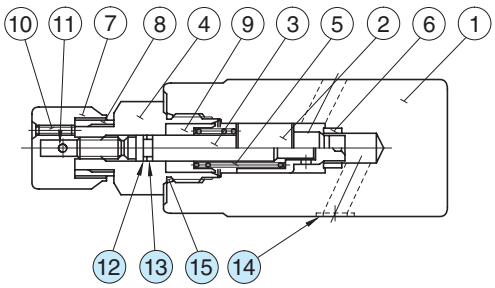

List of Seals

Item	Name of Parts	Part Numbers	Qty.	Remarks
12	Back Up Ring	900-VK411915-2	1	Included in Seal Kit Kit No.: KS-MSP-03-30
13	O-Ring	SO-NA-P7	1	
14	O-Ring	SO-NB-A014	5	
15	O-Ring	SO-NB-P24	1	

Throttle and Check Modular Valves

Specifications

Model Numbers	Max. Operating Pressure MPa (PSI)	Max. Flow L/min (U.S.GPM)
MSA-03-∗-40 MSB-03-∗-40 MSW-03-∗-40	25 (3630)	120 (31.7)

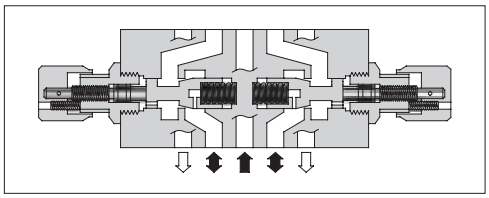

Model Number Designation

F-	MSW	-03	-X	-40	∗
Special Seals	Series Number	Valve Size	Direction of Flow	Design Number	Design Standard
F: Special Seals for Phosphate Ester Type Fluids (Omit if not required)	**MSA** : Throttle and Check Valve for A-Line **MSB** : Throttle and Check Valve for B-Line **MSW** : Throttle and Check Valve for A&B-Lines	**03**	**X**: Metre-out **Y**: Metre-in	**40**	Refer to ★

★ Design Standards: None ..... Japanese Standard "JIS", European Design Standard and N. American Design Standard

Instructions

- To make flow rate adjustment, loosen locking screw for the dial and turn the flow adjustment dial clockwise or anti-clockwise. For a decrease of flow, turn the dial clockwise. Be sure to re-tighten the locking screw firmly after the adjustment of the flow rate.

Model No.	Graphic Symbols	Detailed Graphic Symbols	Model No.	Graphic Symbols	Detailed Graphic Symbols
	Metre-out			Metre-in	
MSA-03-X		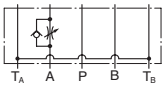	MSA-03-Y	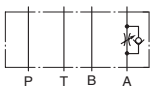	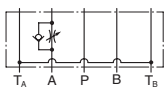
MSB-03-X	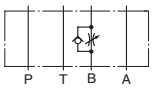	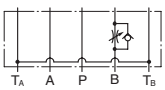	MSB-03-Y	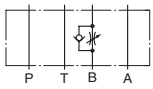	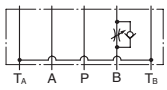
MSW-03-X	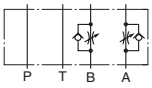	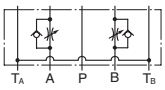	MSW-03-Y	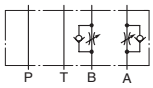	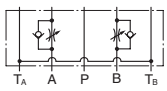

Typical Performance Characteristics

Hydraulic Fluid: Viscosity 35 mm^2/s (164 SSU), Specific Gravity 0.850

Pressure Drop

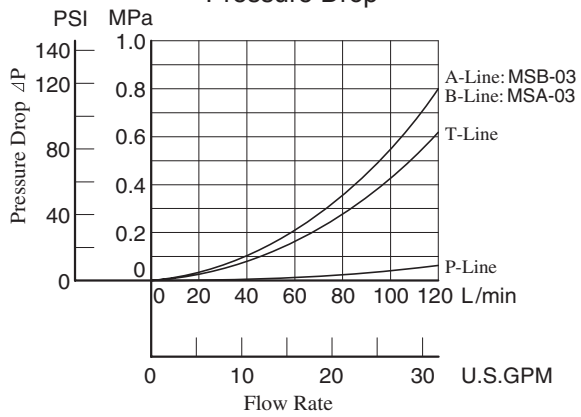

Pressure Drop for Free Flow

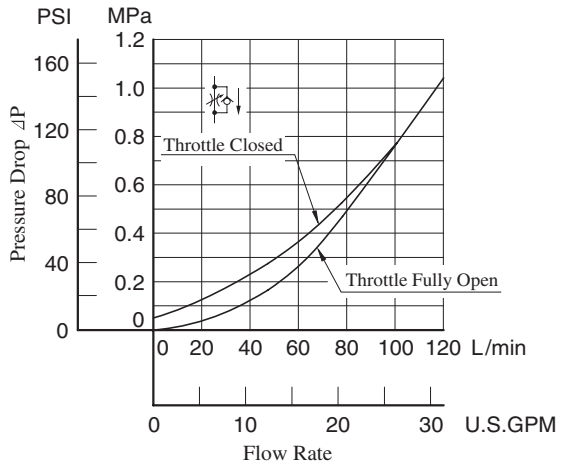

Pressure Drop at Throttle Fully Open

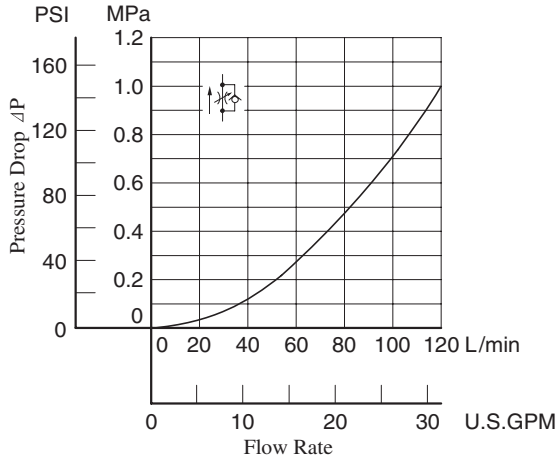

Metred Flow vs Dial Position

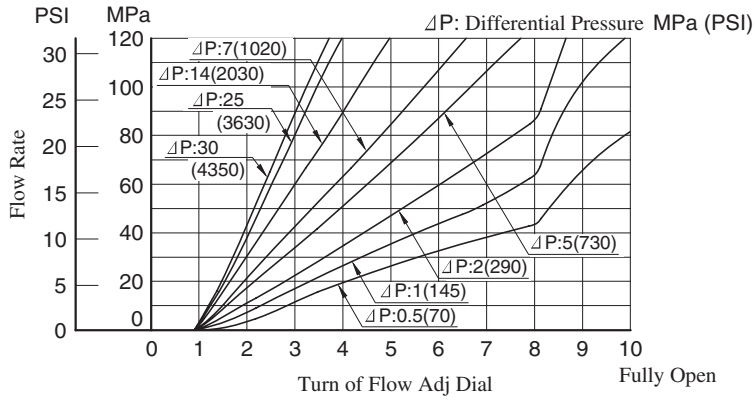

MSW-03-$^{X}_{Y}$-40

DIMENSIONS IN MILLIMETRES (INCHES)

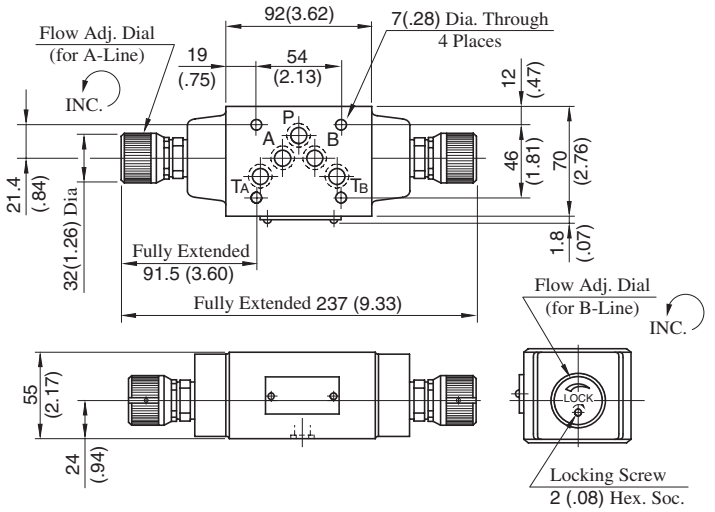

Approx. Mass.....3.7 kg (8.2 lbs.)

MSA-03-$^{X}_{Y}$-40

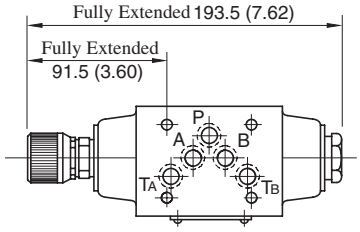

Approx. Mass.....3.5 kg (7.7 lbs.)

- For other dimensions, refer to "MSW-03" drawing left.

MSB-03-$^{X}_{Y}$-40

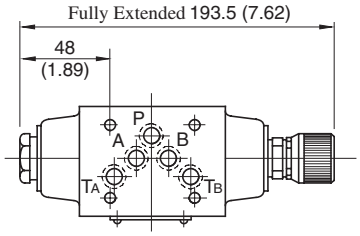

Approx. Mass.....3.5 kg (7.7 lbs.)

- For other dimensions, refer to "MSW-03" drawing left.

Spare Parts List

MSA-03-$^{X}_{Y}$-40

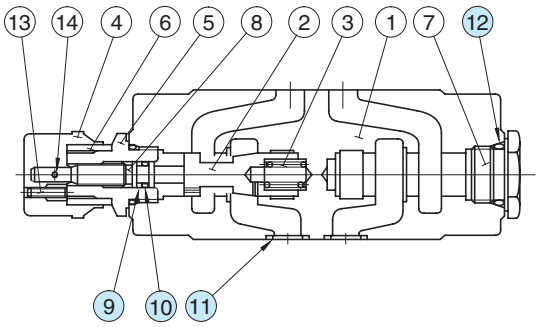

MSB-03-$^{X}_{Y}$-40

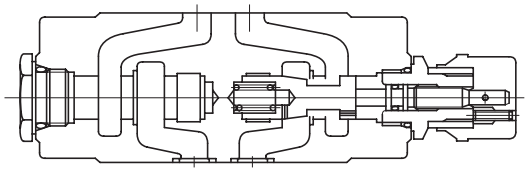

MSW-03-$^{X}_{Y}$-40

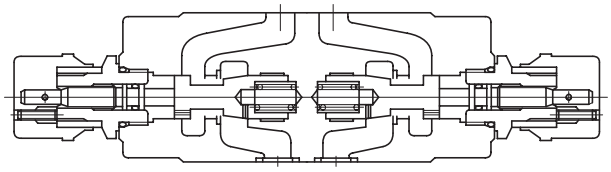

List of Seals

Item	Name of Parts	Part Numbers	Quantity		
			MSA-03	MSB-03	MSW-03
9	Back Up Ring	SO-BB-P8	1	1	2
10	O-Ring	SO-NA-P8	1	1	2
11	O-Ring	SO-NB-A014	5	5	5
12	O-Ring	SO-NB-P18	2	2	2

Note: When ordering seals, please specify the seal kit number from the table right.

List of Seal Kits

Valve Model Numbers	Seal Kit Numbers
MSA-03	KS-MSA-03-40
MSB-03	
MSW-03	KS-MSW-03-40

Check Modular Valves

Specifications

Model Numbers	Max. Operating Pressure MPa (PSI)	Max. Flow L/min (U.S.GPM)
MCP-03-∗-10 MCA-03-∗-20 MCB-03-∗-20 MCT-03-∗-10	25 (3630)	70 (18.5)

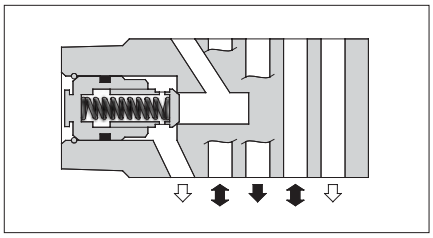

Model Number Designation

F-	MCP	-03	-0	-10	∗
Special Seals	Series Number	Valve Size	Cracking Pressure MPa(PSI)	Design Number	Design Standard
F: Special Seals for Phosphate Ester Type Fluids (Omit if not required)	**MCP** : Check Valve for P-Line	**03**	**0** : 0.035(5) **2** : 0.2(29)	**10**	Refer to ★
	MCA : Check Valve for A-Line **MCB** : Check Valve for B-Line			**20**	
	MCT : Check Valve for T-Line			**10**	

★ Design Standards: None ····· Japanese Standard "JIS", European Design Standard and N. American Design Standard

Typical Performance Characteristics

Hydraulic Fluid: Viscosity 35 mm²/s (164 SSU), Specific Gravity 0.850

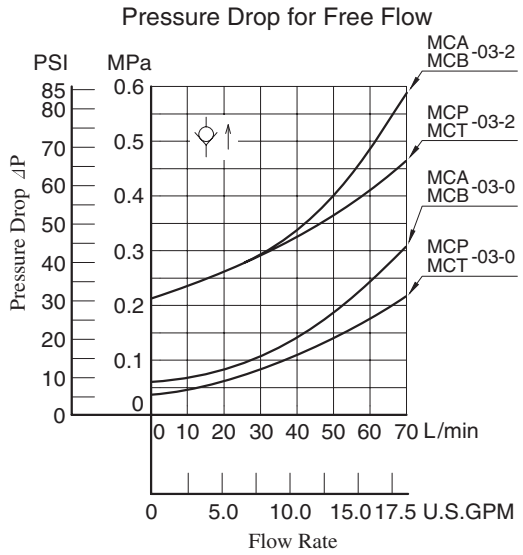

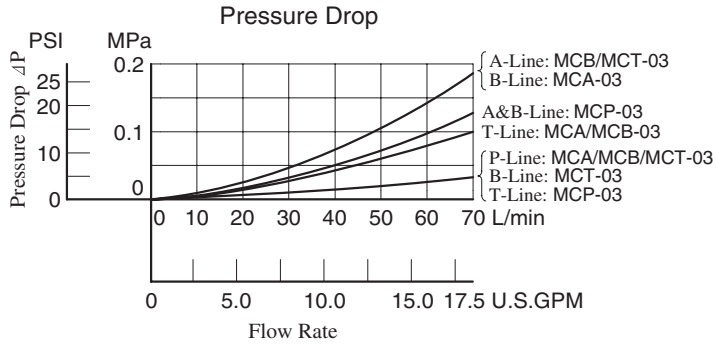

Model No.	Graphic Symbols	Detailed Graphic Symbols
MCP-03	P T B A	T_A A P B T_B
MCA-03	P T B A	T_A A P B T_B
MCB-03	P T B A	T_A A P B T_B
MCT-03	P T B A	T_A A P B T_B

Instructions

- **Tank Line Used**

  Check valve function of MCT-03 is included in T_A-Line. Therefore, the tank line for a circuit that uses this valve must be T_A-line.

MCP-03-∗-10

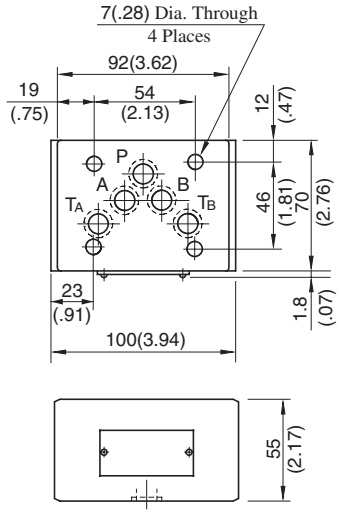

Approx. Mass.....2.5 kg (5.5 lbs.)

MCA-03-∗-20
MCB-03-∗-20

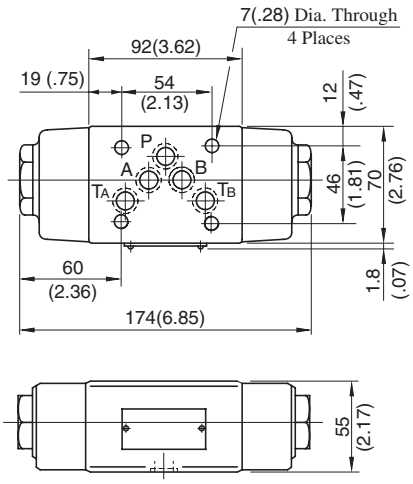

Approx. Mass.....3.5 kg (7.7 lbs.)

DIMENSIONS IN MILLIMETRES (INCHES)

MCT-03-∗-10

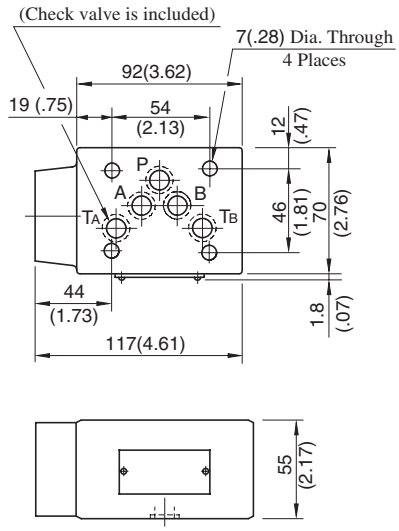

Approx. Mass.....2.8 kg (6.2 lbs.)

Spare Parts List

MCP-03-∗-10

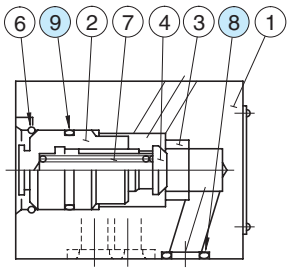

● List of Seals

Item	Name of Parts	Part Numbers	Qty.	Remarks
8	O-Ring	SO-NB-A014	5	Included in Seal Kit Kit No.: KS-MCP-03-10
9	O-Ring	SO-NB-P21	1	

MCT-03-∗-10

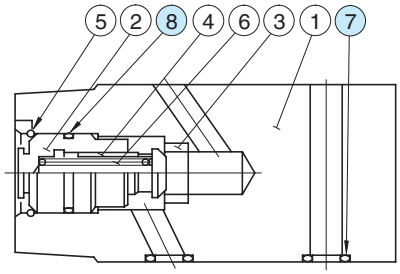

● List of Seals

Item	Name of Parts	Part Numbers	Qty.	Remarks
7	O-Ring	SO-NB-A014	5	Included in Seal Kit Kit No.: KS-MCP-03-10
8	O-Ring	SO-NB-P21	1	

MCA-03-∗-20

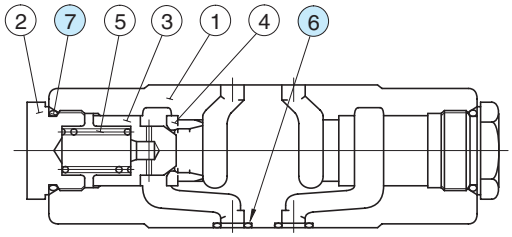

MCB-03-∗-20

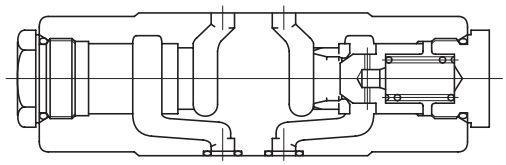

● List of Seals

Item	Name of Parts	Part Numbers	Qty.	Remarks
6	O-Ring	SO-NB-A014	5	Included in Seal Kit Kit No.: KS-MCA-03-20
7	O-Ring	SO-NB-P24	2	

Check Modular Valves For "P&T" Lines

Specifications

Model Numbers	Max. Operating Pressure MPa (PSI)	Max. Flow L/min (U.S.GPM)
MCPT-03-P∗-T∗-10	25 (3630)	70 (18.5)

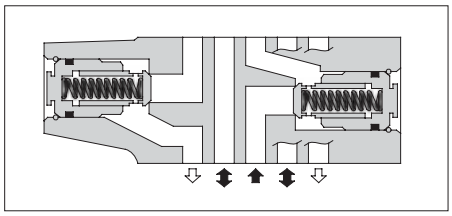

Model Number Designation

F-	MCPT	-03	-P0	-T0	-10	∗
Special Seals	Series Number	Valve Size	Cracking Pres. of P-Line MPa(PSI)	Cracking Pres. of T-Line MPa(PSI)	Design Number	Design Standard
F: Special Seals for Phosphate Ester Type Fluids (Omit if not required)	**MCPT** : Check Valve for P&T-Lines	**03**	**P0** : 0.035(5) **P2** : 0.2(29)	**T0** : 0.035(5) **T2** : 0.2(29)	**10**	Refer to ★

★ Design Standards: None ····· Japanese Standard "JIS", European Design Standard and N. American Design Standard

Typical Performance Characteristics

Hydraulic Fluid: Viscosity 35 mm²/s (164 SSU), Specific Gravity 0.850

Pressure Drop for Free Flow

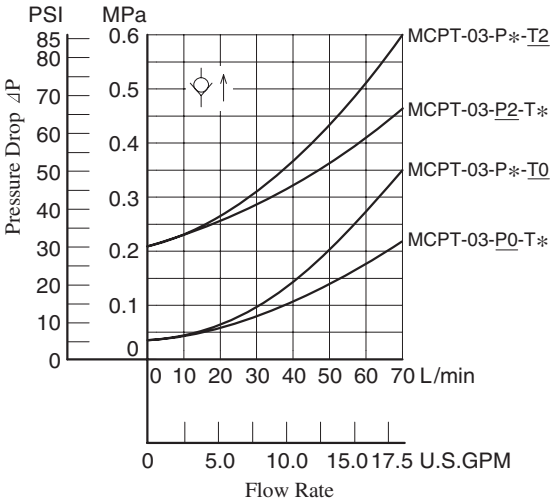

Graphic Symbol

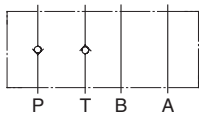

Detailed Graphic Symbol

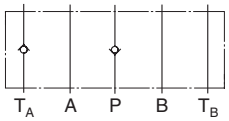

Pressure Drop

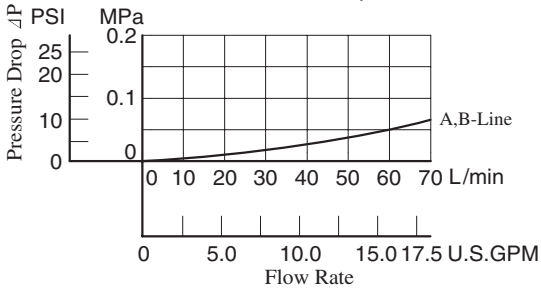

Instructions

● **Tank Line Used**

Check valve function of Tank Line is included in TA-Line. Therefore, the tank line for a circuit that uses this valve must be TA-line.

MCPT-03-P∗-T∗-10

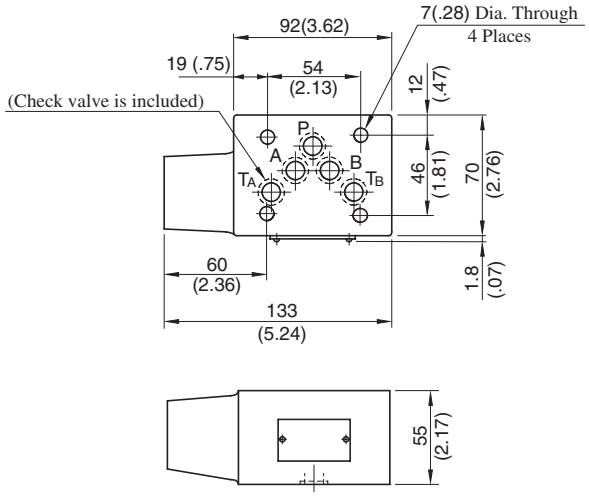

Approx. Mass.....2.7 kg (6.0 lbs.)

DIMENSIONS IN MILLIMETRES (INCHES)

Spare Parts List

MCPT-03-P∗-T∗-10

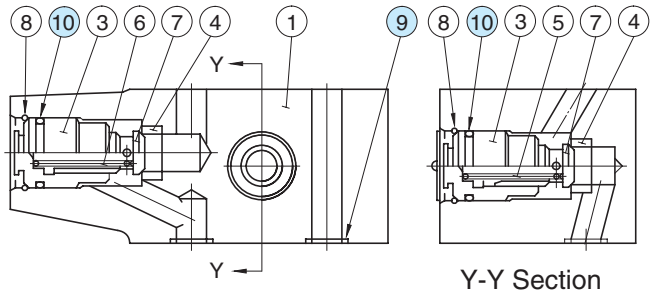

List of Seals

Item	Name of Parts	Part Numbers	Qty.	Remarks
9	O-Ring	SO-NB-A014	5	Included in Seal Kit Kit No.: KS-MCPT-03-10
10	O-Ring	SO-NB-P21	2	

Anti-Cavitation Modular Valves

Specifications

Model Number	Max. Operating Pressure MPa (PSI)	Max. Flow L/min (U.S.GPM)
MAC-03-10	25 (3630)	70 (18.5)

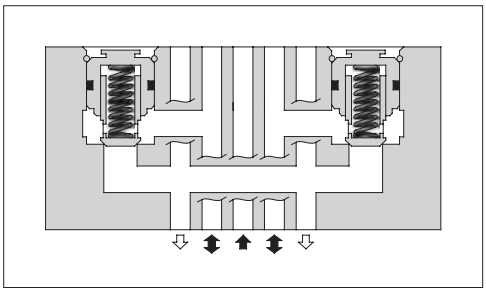

Model Number Designation

F-	MAC	-03	-10	*
Special Seals	Series Number	Valve Size	Design Number	Design Standard
F: Special Seals for Phosphate Ester Type Fluids (Omit if not required)	**MAC:** Anti-Cavitation Valve	**03**	**10**	Refer to ★

★ Design Standards: None ..... Japanese Standard "JIS", European Design Standard and N. American Design Standard

Pressure Drop

Hydraulic Fluid: Viscosity 35 mm^2/s (164 SSU), Specific Gravity 0.850

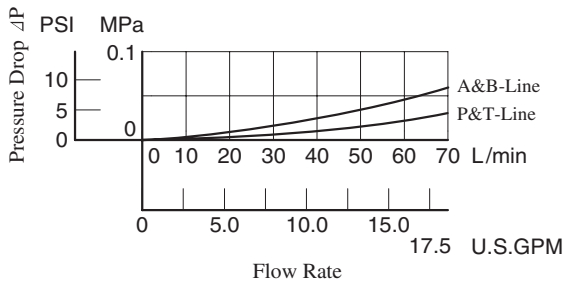

Graphic Symbol

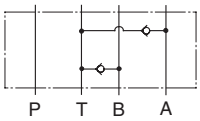

Detailed Graphic Symbol

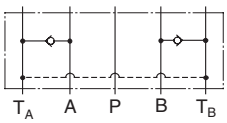

MAC-03-10

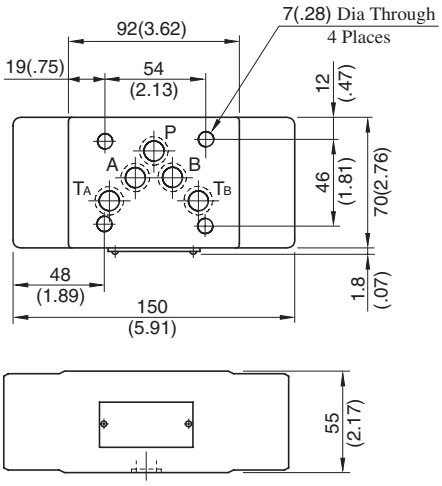

Approx. Mass.....3.8 kg (8.4 lbs.)

DIMENSIONS IN MILLIMETRES (INCHES)

Spare Parts List

MAC-03-10

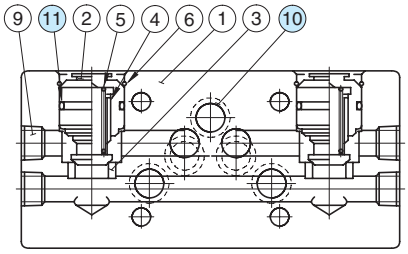

List of Seals

Item	Name of Parts	Part Numbers	Qty.	Remarks
10	O-Ring	SO-NB-A014	5	Included in Seal Kit Kit No.: KS-MAC-03-10
11	O-Ring	SO-NB-P21	2	

Pilot Operated Check Modular Valves

Specifications

Model Numbers		Max. Operating Pressure MPa (PSI)	Max. Flow L/min (U.S.GPM)
Standard	MP∗-03-∗-20	25 (3630)	70 (18.5)
Low Pilot Pressure Control Type	MP∗-03-∗-2001		

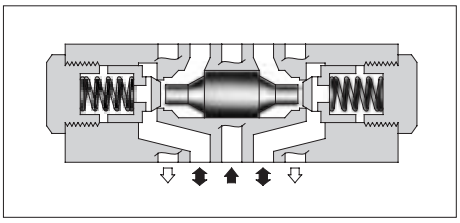

Model Number Designation

F-	MPA	-03	-2	-20	∗
Special Seals	Series Number	Valve Size	Cracking Pressure MPa (PSI)	Design Number	Design Standard
F: Special Seals for Phosphate Ester Type Fluids (Omit if not required)	**MPA :** Pilot Operated Check Valve for A-Line **MPB :** Pilot Operated Check Valve for B-Line **MPW :** Pilot Operated Check Valve for A&B-Lines	**03**	**2 :** 0.2 (29) **4 :** 0.4 (58)	**20** (Standard) **2001** (Low Pilot Pressure Control Type)	Refer to ★

★ Design Standards: None ..... Japanese Standard "JIS", European Design Standard and N. American Design Standard

Model No.	Graphic Symbols	Detailed Graphic Symbols
MPA-03	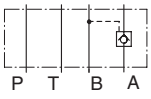	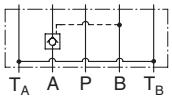
MPB-03	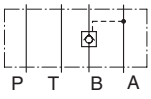	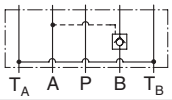
MPW-03	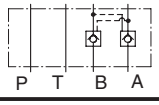	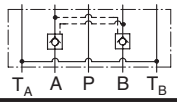

Typical Performance Characteristics

Hydraulic Fluid: Viscosity 35 mm^2/s (164 SSU), Specific Gravity 0.850

Pressure Drop

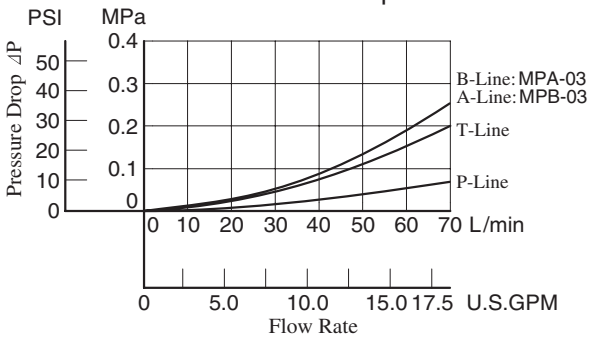

Pressure Drop for Reversed Controlled Flow

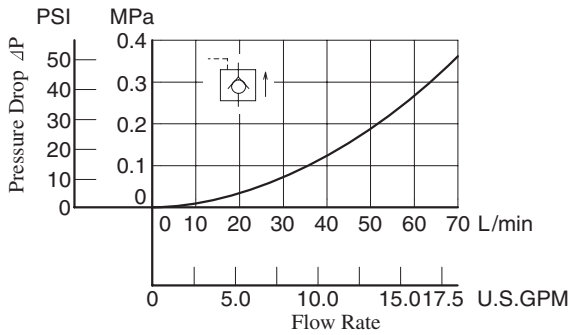

Pressure Drop for Free Flow

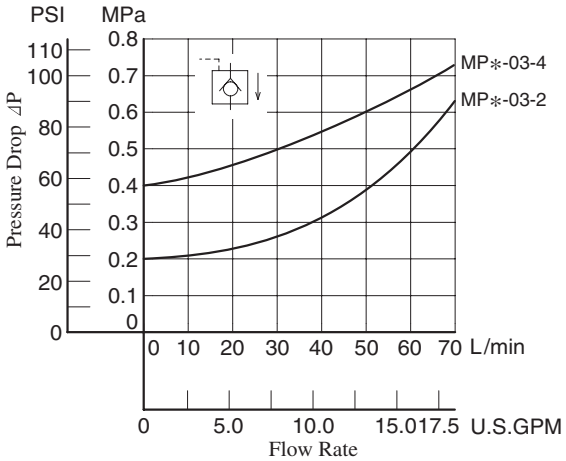

Min. Pilot Pressure

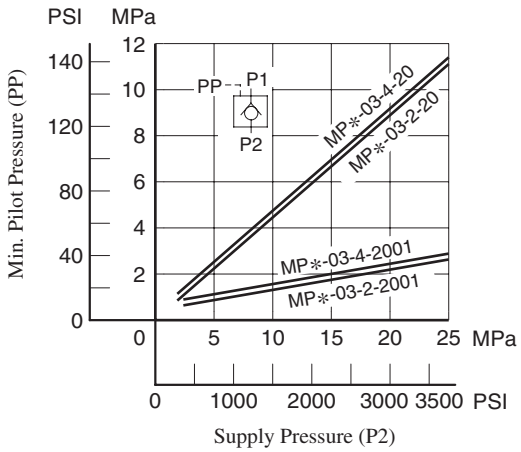

F

03 Series Modular Valves

MPA-03-∗-20/2001
MPB-03-∗-20/2001
MPW-03-∗-20/2001

DIMENSIONS IN MILLIMETRES (INCHES)

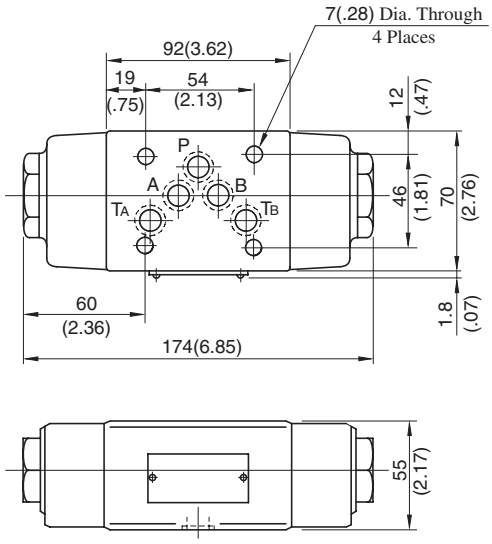

Approx. Mass.....3.5 kg (7.7 lbs.)

Spare Parts List

MPA-03-∗-20

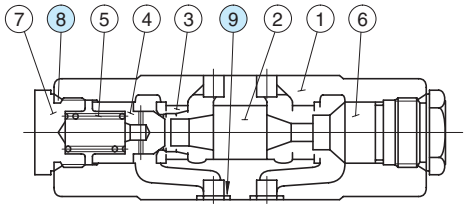

MPB-03-∗-20

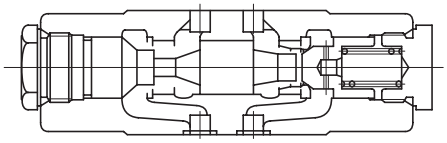

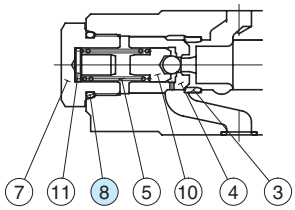

Low Pilot Pressure Control Type
(MPA-03-∗-2001)

List of Seals

Item	Name of Parts	Part Numbers	Qty.	Remarks
8	O-Ring	SO-NB-P24	2	Included in Seal Kit Kit No.: KS-MPA-03-20
9	O-Ring	SO-NB-A014	5	

MPW-03-∗-20

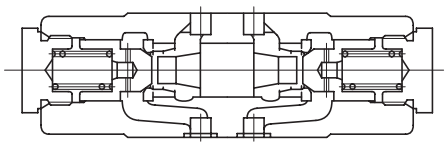

End Plates

Blocking plates are used for auxiliary mounting surfaces or for closing unnecessary circuit.
Bypass plates are used for one-way flow circuit that requires no solenoid operated directional valves.

Specifications

Model Numbers	Max. Operating Pressure MPa (PSI)	Max. Flow L/min (U.S.GPM)
MDC-03-∗-10	25 (3630)	70 (18.5)

Model Number Designation

F-	MDC	-03	-A	-10	∗
Special Seals	Series Number	Valve Size	Type of Plate	Design Number	Design Standard
F: Special Seals for Phosphate Ester Type Fluids (Omit if not required)	**MDC:** End Plate	**03**	**A:** Blocking Plate **B:** Bypass Plate	**10**	**None:** Japanese Standard "JIS", European Design Standard and N. American Design Standard

Pressure Drop

Hydraulic Fluid: Viscosity 35 mm²/s (164 SSU), Specific Gravity 0.850

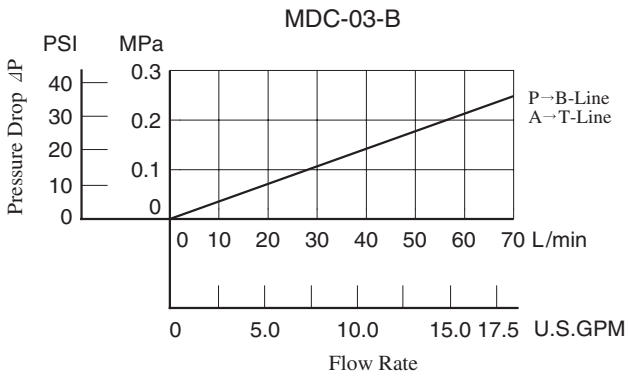

Model No.	Graphic Symbols	Detailed Graphic Symbols
MDC-03-A	P T B A	T_A A P B T_B
MDC-03-B	P T B A	T_A A P B T_B

MDC-03-∗-10

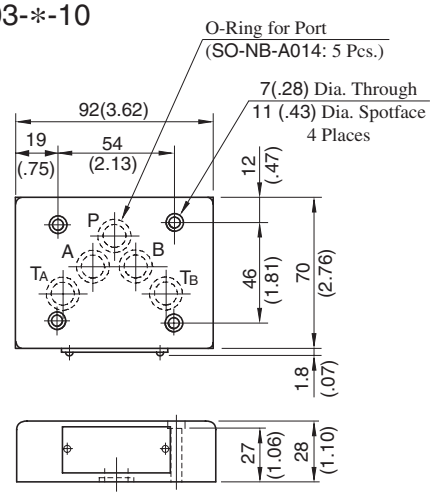

Approx. Mass : 1.2 kg (2.6 lbs.)

DIMENSIONS IN MILLIMETRES (INCHES)

Connecting Plates

Specifications

Model Numbers	Max. Operating Pressure MPa (PSI)	Max. Flow L/min (U.S.GPM)
MDS-03-10/1090	25 (3630)	70 (18.5)

Model Number Designation

F-	MDS	-03	-10	*
Special Seals	Series Number	Valve Size	Design Number	Design Standard
F: Special Seals for Phosphate Ester Type Fluids (Omit if not required)	**MDS :** Connecting Plate	**03**	**10**	**None**: Japanese Standard "JIS" and European design Standard **90** : N.American Design Standard

Pressure Drop

Hydraulic Fluid: Viscosity 35 mm^2/s (164 SSU), Specific Gravity 0.850

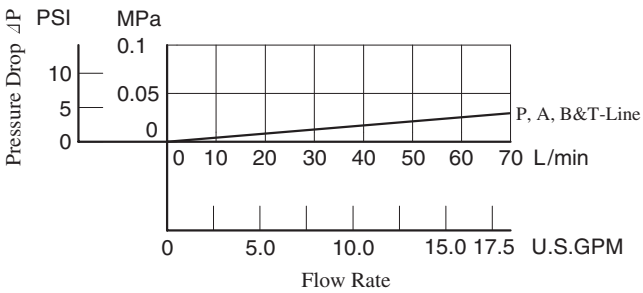

Graphic Symbol

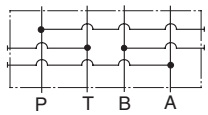

Detailed Graphic Symbol

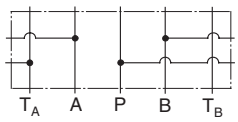

MDS-03-10/1090

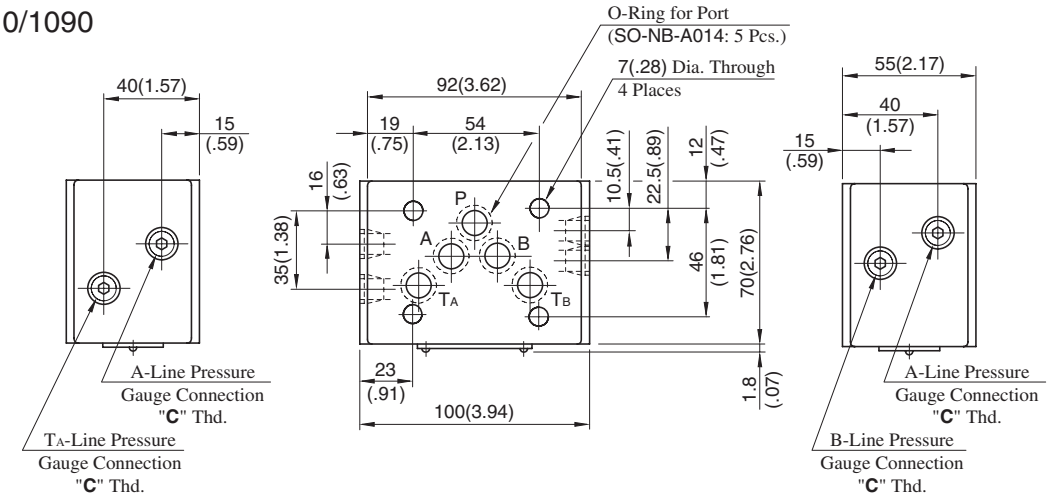

Approx. Mass.....2.5 kg (5.5 lbs.)

Model Numbers	Thread Size "C" Thd.
MDS-03-10	Rc 1/4 = 1/4 BSP.Tr
MDS-03-1090	1/4 NPT

DIMENSIONS IN MILLIMETRES (INCHES)

Base Plates For Modular Valves

Specifications

Max. Operating Pressure ---------- 25 MPa (3630 PSI)

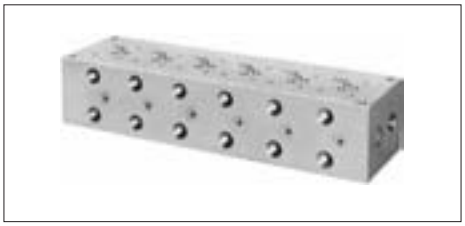

Model Number Designation

MMC	-03	-T	-6	-21	*
Series Number	Plate Size	Type of Connection	Number of Stations	Design Number	Design Standard
MMC : Base Plate	**03**	**T :** Threaded Connection	**1 :** 1 Station **2 :** 2 Stations **3 :** 3 Stations **4 :** 4 Stations **5 :** 5 Stations **6 :** 6 Stations **7 :** 7 Stations	**21**	**None :** Japanese Standard "JIS" **80 :** European Design Standard **90 :** N.American Design Standard

Pressure Drop

Hydraulic Fluid: Viscosity 35 mm²/s (164 SSU), Specific Gravity 0.850

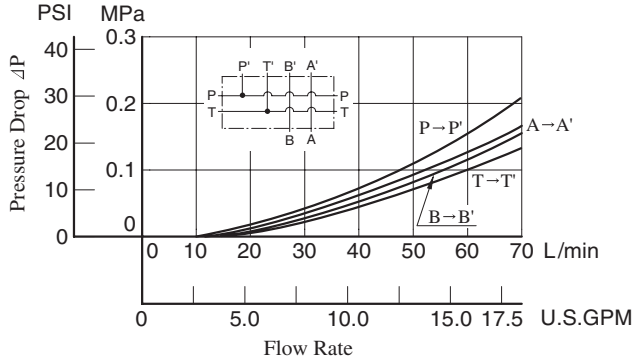

Graphic Symbol

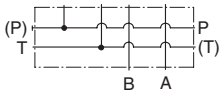

Detailed Graphic Symbol

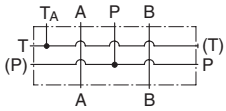

MMC-03-T-1

Graphic Symbol

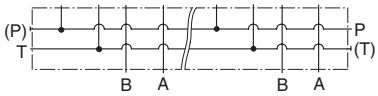

MMC-03-T-2-7

Mounting Surface Dimensions for 3/8 Modular Valve

When the standard base plate (MMC-03) is not used, the following mounting surface must be prepared. Also, the mounting surface must have a good machined finish.

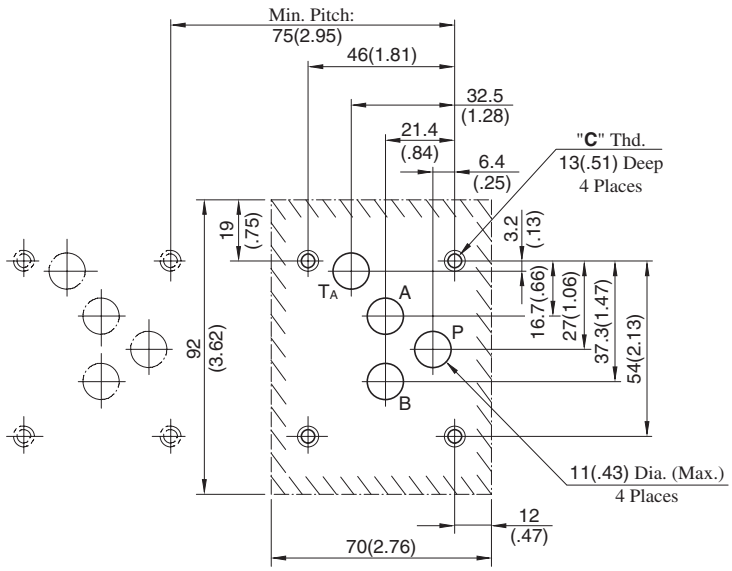

Instructions

- Although two ports are provided for both **pressure port "P"** and **tank port "T"**, either may be used.
  However, the ports having (P) or (T) in the drawing are normally plugged. Remove the plugs of the ports when they are used. Make sure that the ports that are not currently used are properly plugged.

DIMENSIONS IN MILLIMETRES (INCHES)

Design Std.	"C" Thd.
Japanese Standard "JIS" and European Design Standard	M6
N.American Design Standard	1/4-20 UNC

DIMENSIONS IN MILLIMETRES (INCHES)

MMC-03-T-1-21/2190

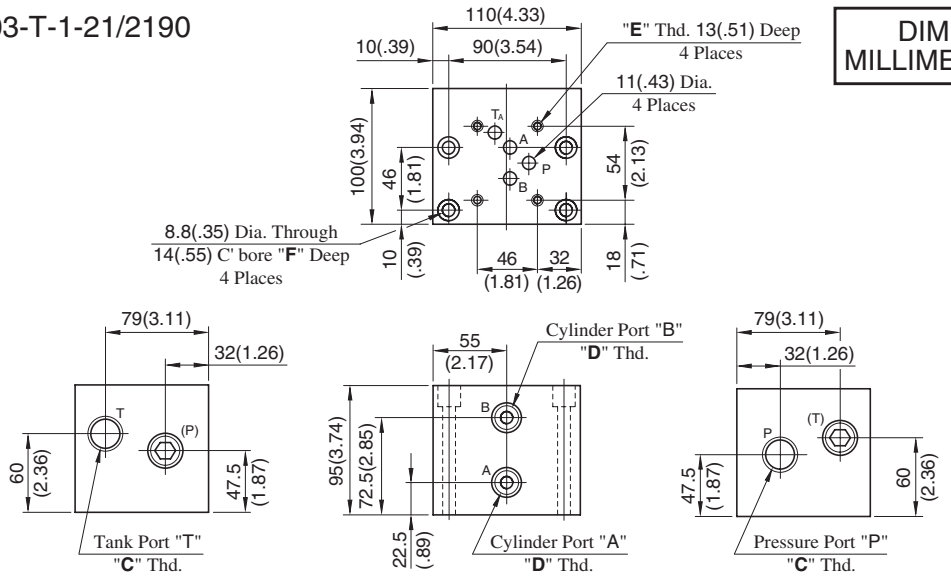

MMC-03-T-∗-21/2190

Number of Station
(2-7 Stations)

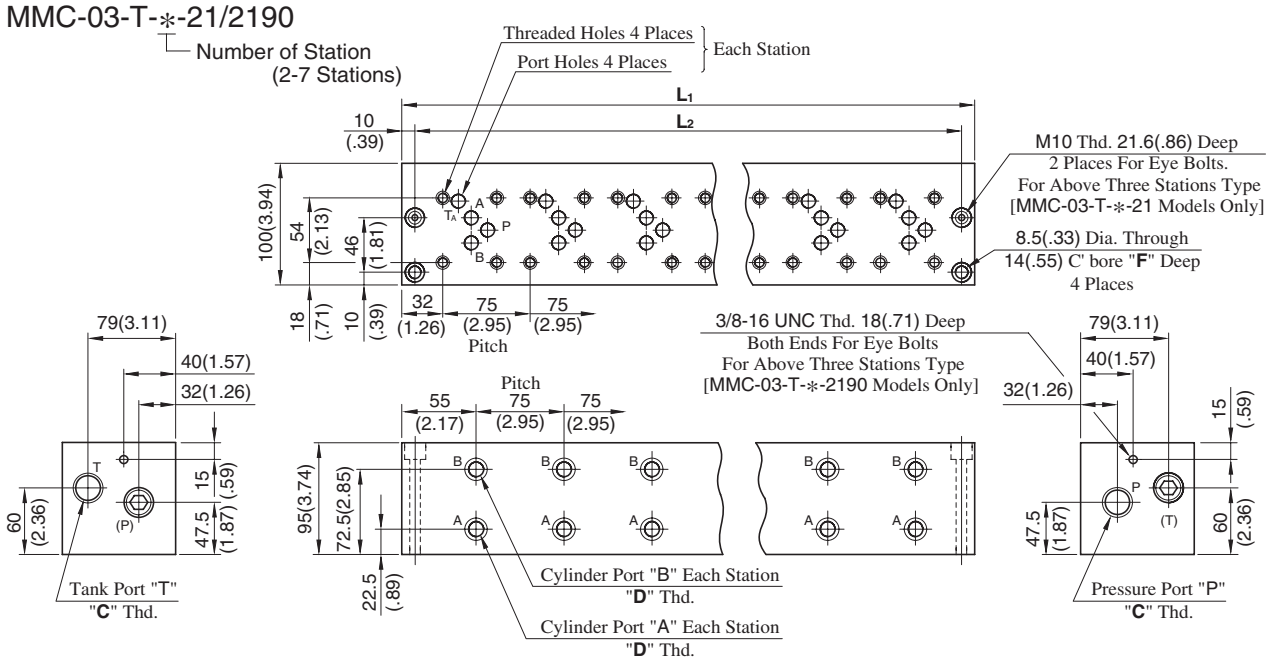

• For other dimensions, refer to above Model MMC-03-T-1.

Model Numbers	Thread Size			Dimensions mm (Inches)			Approx. Mass kg (lbs.)
	"C" Thd.	"D" Thd.	"E" Thd.	F	L_1	L_2	
MMC-03-T-1-21	Rc 3/4	Rc 1/2	M6	8.6 (.34)	—	—	8.5 (18.7)
MMC-03-T-1-2190	3/4 NPT	1/2 NPT	1/4-20 UNC	22 (.87)			
MMC-03-T-2-21	Rc 3/4	Rc 1/2	M6	8.6 (.34)	185 (7.28)	165 (6.50)	14 (30.9)
MMC-03-T-2-2190	3/4 NPT	1/2 NPT	1/4-20 UNC	22 (.87)			
MMC-03-T-3-21	Rc 3/4	Rc 1/2	M6	8.6 (.34)	260 (10.24)	240 (9.45)	19.5 (43.0)
MMC-03-T-3-2190	3/4 NPT	1/2 NPT	1/4-20 UNC	22 (.87)			
MMC-03-T-4-21	Rc 3/4	Rc 1/2	M6	8.6 (.34)	335 (13.19)	315 (12.40)	25 (55.1)
MMC-03-T-4-2190	3/4 NPT	1/2 NPT	1/4-20 UNC	22 (.87)			
MMC-03-T-5-21	Rc 3/4	Rc 1/2	M6	8.6 (.34)	410 (16.14)	390 (15.35)	30.5 (67.3)
MMC-03-T-5-2190	3/4 NPT	1/2 NPT	1/4-20 UNC	22 (.87)			
MMC-03-T-6-21	Rc 3/4	Rc 1/2	M6	8.6 (.34)	485 (19.09)	465 (18.31)	36 (79.4)
MMC-03-T-6-2190	3/4 NPT	1/2 NPT	1/4-20 UNC	22 (.87)			
MMC-03-T-7-21	Rc 3/4	Rc 1/2	M6	8.6 (.34)	560 (22.05)	540 (21.26)	41 (90.4)
MMC-03-T-7-2190	3/4 NPT	1/2 NPT	1/4-20 UNC	22 (.87)			

MMC-03-T-1-2180

DIMENSIONS IN MILLIMETRES (INCHES)

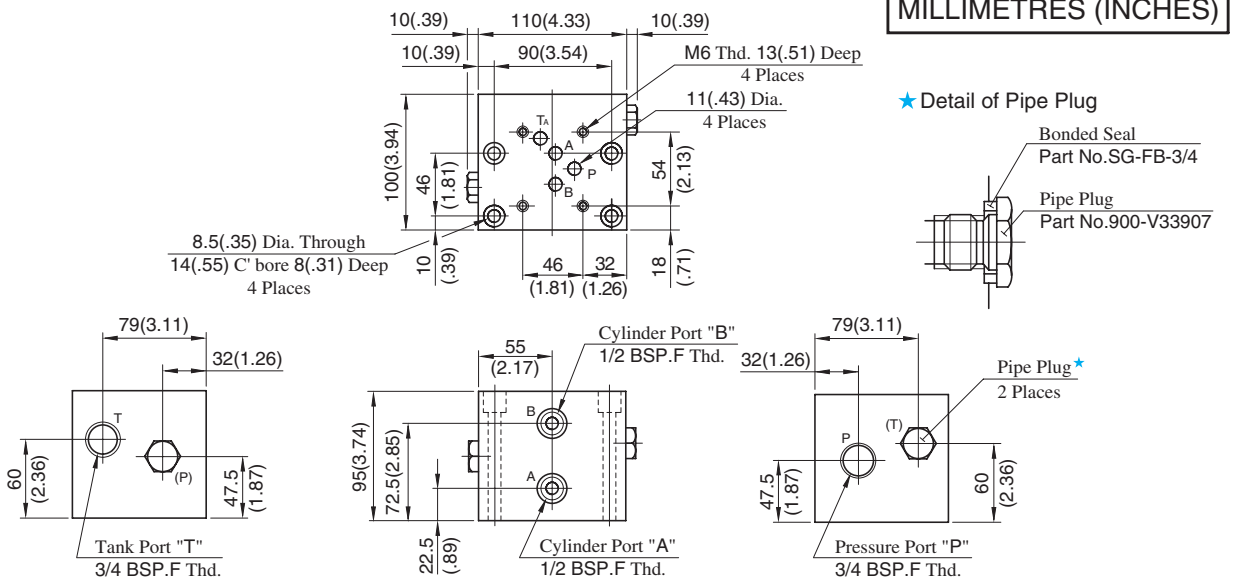

Approx. Mass : 8.5 kg (18.7 lbs.)

MMC-03-T-∗-2180

Number of Station
(2-7 Stations)

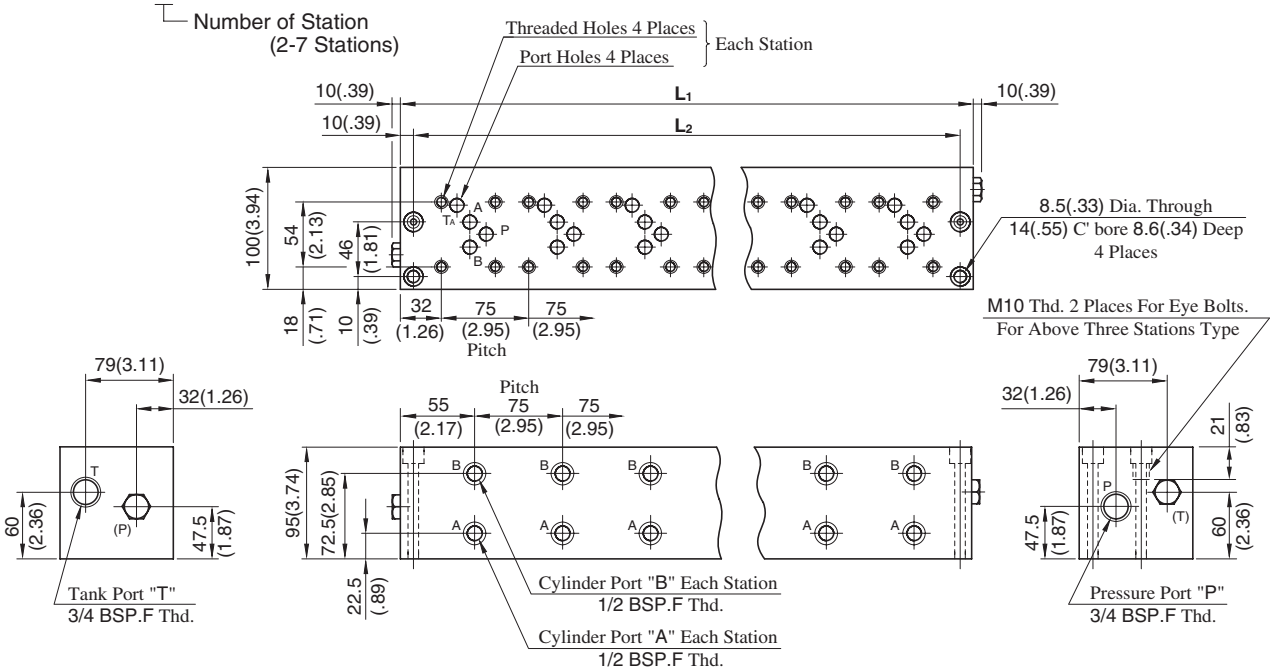

• For other dimensions, refer to above Model MMC-03-T-1.

Model Numbers	Dimensions mm (Inches)		Approx. Mass kg (lbs.)
	L_1	L_2	
MMC-03-T-2-2180	185 (7.28)	165 (6.50)	14 (30.9)
MMC-03-T-3-2180	260 (10.24)	240 (9.45)	19.5 (43.0)
MMC-03-T-4-2180	335 (13.19)	315 (12.40)	25 (55.1)
MMC-03-T-5-2180	410 (16.14)	390 (15.35)	30.5 (67.3)
MMC-03-T-6-2180	485 (19.09)	465 (18.31)	36 (79.4)
MMC-03-T-7-2180	560 (22.05)	540 (21.26)	41 (90.4)

Mounting Bolt Kits For Modular Valves

Valves are mounted with four stud bolts. Valve combination varies according to the circuit type. Hence, the mounting bolt kits are available on a combination type basis.
When ordering the mounting bolt kit, be sure to give the bolt kit model number from the table below.

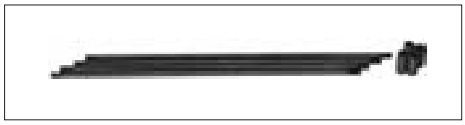

Model Number Designation

MBK	-03	-04	-10	∗
Series Number	Size of Modular Valve	Bolt Number	Design Number	Design Standard
MBK: Mounting Bolt Kits for Modular Valve	**03**	**01, 02, 03, 04, 05** (Refer to the following chart)	**10**	Refer to ★

★ Design Standards: None ..... Japanese Standard "JIS" and European Design Standard
90 ..... N. American Design Standard

Bolt Kit Composition

Stud Bolt ------ 4 Pcs. } 1 Set
Nut ---------- 4 Pcs.

Note: In case of bolt kit model number having "05", four hexagon socket head cap screws only.

Tightening Torque:

12-15 Nm (106-133 IN. lbs.)

Bolt Kits Selection Chart

Model Numbers	Quantity of valves to be stacked: Solenoid Operated Directional Valve (∗-DSG-03)	End Plate (MDC-03)	Modular Valve & Connecting Plate	Approx. Mass g (lbs.)
MBK-03-01-10∗	1	0	1	120(.26)
	0	1		
MBK-03-02-10∗	1	0	2	160(.35)
	0	1		
MBK-03-03-10∗	1	0	3	200(.44)
	0	1		
MBK-03-04-10∗	1	0	4	240(.53)
	0	1		
MBK-03-05-10∗	1★	0	0	40(.09)
	0	1		

★ The solenoid operated directional valve comes with mounting bolts.

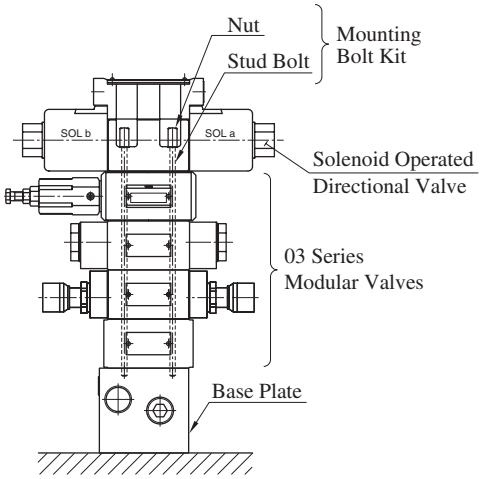

Stacking Example

MBK-03-∗-10/1090

Stud Bolt

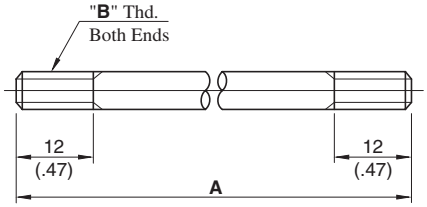

Nut

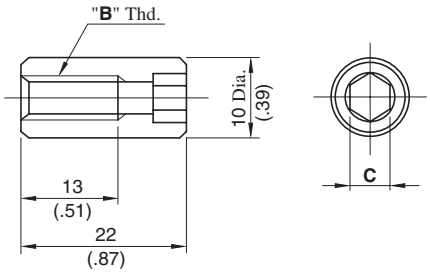

MBK-03-05-10/1090

Socket Head Cap Screw

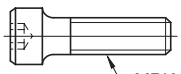

MBK-03-05-30: M6×35 Lg.
MBK-03-05-3090: 1/4-20 UNC×1-1/2 Lg.

DIMENSIONS IN MILLIMETRES (INCHES)

Model Numbers	A mm (In.)	"B" Thd.	C
MBK-03-01-10	103 (4.06)	M6	5 (.20)
MBK-03-02-10	158 (6.22)		
MBK-03-03-10	213 (8.39)		
MBK-03-04-10	268 (10.55)		
MBK-03-01-1090	103 (4.06)	1/4-20 UNC	4.76 (3/16)
MBK-03-02-1090	158 (6.22)		
MBK-03-03-1090	213 (8.39)		
MBK-03-04-1090	268 (10.55)		

3/4 Modular Valves

Type of Modular Valve

Class	Model Numbers	Graphic Symbols	Page
	Solenoid Controlled Pilot Operated Directional Valve ★ (S-)DSHG-06-∗∗∗-∗-53/5390	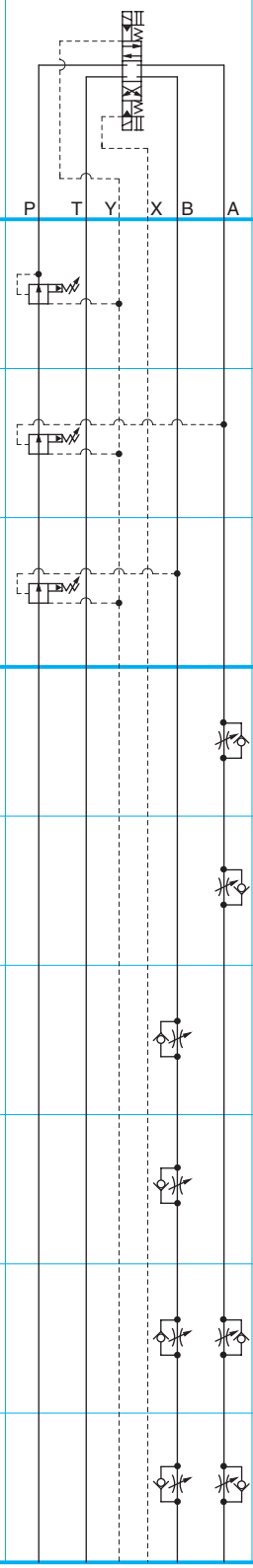	381
Pressure Control Valves	Reducing Valves (for "P-Line") MRP-06-∗-30/3090		620
	Reducing Valves (for "A-Line") MRA-06-∗-30/3090		620
	Reducing Valves (for "B-Line") MRB-06-∗-30/3090		620
Flow Control Valves	Throttle and Check Valves (for "A-Line", Metre-out) MSA-06-X-30/3090		623
	Throttle and Check Valves (for "A-Line", Metre-in) MSA-06-Y-30/3090		623
	Throttle and Check Valves (for "B-Line", Metre-out) MSB-06-X-30/3090		623
	Throttle and Check Valves (for "B-Line", Metre-in) MSB-06-Y-30/3090		623
	Throttle and Check Valves (for "A&B-Lines", Metre-out) MSW-06-X-30/3090		623
	Throttle and Check Valves (for "A&B-Lines", Metre-in) MSW-06-Y-30/3090		623

Class	Model Numbers	Graphic Symbols	Page
Directional Control Valves	Pilot Operated Check Valves (for "A-Line", Internal Pilot-) Internal Drain Type) MPA-06-∗-30/3090	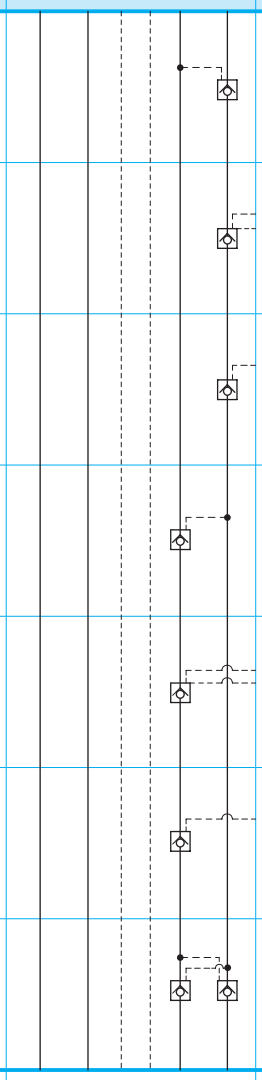	626
	Pilot Operated Check Valves (for "A-Line", External Pilot-) External Drain Type) MPA-06∗-∗-X-30/3090		626
	Pilot Operated Check Valves (for "A-Line", External Pilot-) Internal Drain Type) MPA-06∗-∗-Y-30/3090		626
	Pilot Operated Check Valves (for "B-Line", Internal Pilot-) Internal Drain Type) MPB-06-∗-30/3090		626
	Pilot Operated Check Valves (for "B-Line", External Pilot-) External Drain Type) MPB-06∗-∗-X-30/3090		626
	Pilot Operated Check Valves (for "B-Line", External Pilot-) Internal Drain Type) MPB-06∗-∗-Y-30/3090		626
	Pilot Operated Check Valves (for "A&B-Lines", Internal Pilot-) Internal Drain Type) MPW-06-∗-30/3090		626
Mounting Bolts	Bolt Kits MBK-06-∗-30/3090	———	630

★ Because drain ports "V" and "W" are not provided for solenoid controlled pilot operated directional valves of Pressure Centred Type (3H∗) and models with Pilot Piston (P∗), those valves cannot be used in combination with modular valves.

Reducing Modular Valves

Specifications

Model Numbers	Max. Operating Pressure MPa(PSI)	Max. Flow★ L/min (U.S.GPM)
MR∗-06-A-30/3090	25 (3630)	125 (33)
B MR∗-06-C-30/3090 H		500 (132)

★ In the pressure adjustment ranges "A" and "B", maximum flow rates are limited by the pressure setting on the secondary side.
Referring to the secondary pressure vs. maximum flow characteristics on the following page, use the valve at the maximum flow rate within a zone highlighted with .

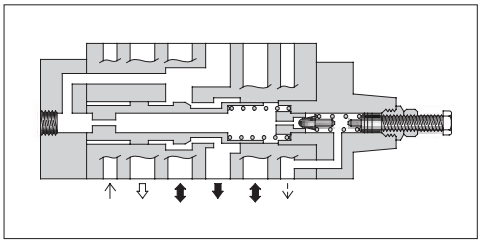

Model Number Designation

F-	MRP	-06	-B	-30	∗
Special Seals	Series Number	Valve Size	Pres. Adj. Range MPa (PSI)	Design Number	Design Standard
F: Special Seals for Phosphate Ester Type Fluids (Omit if not required)	**MRP:** Reducing Valve for P-Line **MRA:** Reducing Valve for A-Line **MRB:** Reducing Valve for B-Line	**06**	**A:** 0.7-7 (100-1020) **B:** 1.5-7 (220-1020) **C:** 3.5-14 (510-2030) **H:** 7-21 (1020-3050)	**30**	Refer to ★

★ Design Standards: None ..... Japanese Standard "JIS" and European Design Standard
90 ..... N. American Design Standard

Instructions

- Connect **Drain Line (Y port)** to oil tank independently so as to obtain stable pressure setting. At the same time, the solenoid controlled pilot operated directional valve to be used in combination with this valve must be of internal drain type (with T).
- To make pressure adjustment, loosen the lock nut and turn the pressure adjustment screw clockwise or anti-clockwise. For an increase of pressure, turn the screw clockwise. Be sure to re-tighten the lock nut firmly after making adjustment to the pressure.

Graphic Symbols

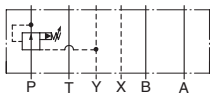

MRP-06

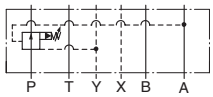

MRA-06

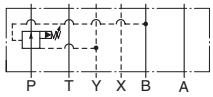

MRB-06

Typical Performance Characteristics

Hydraulic Fluid: Viscosity 35 mm^2/s (164 SSU), Specific Gravity 0.850

Pressure Drop

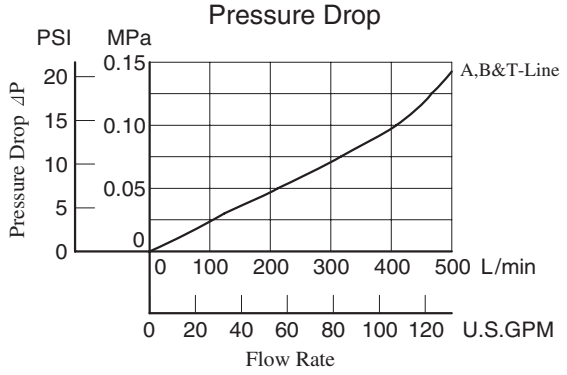

Pressure Drop at Spool Fully Open (P-Line)

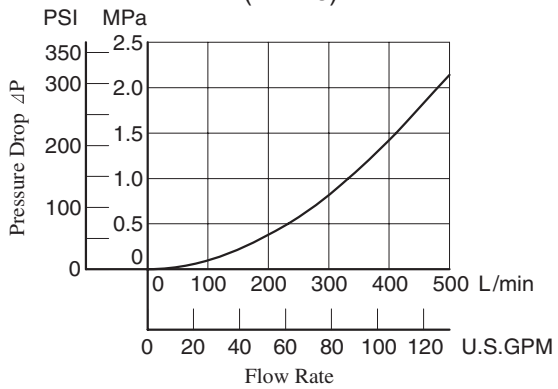

Pilot Flow

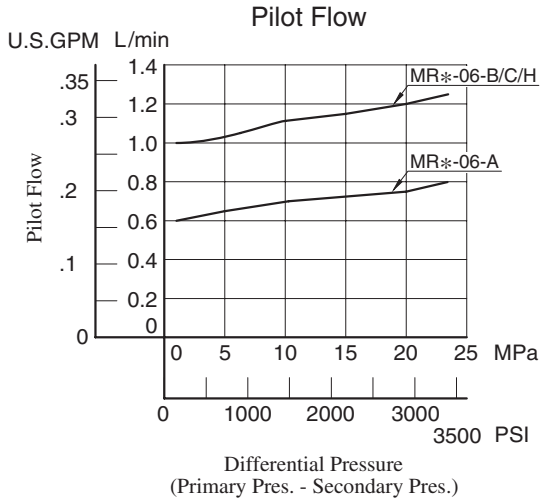

Nominal Override Characteristics

Primary Pressure 25 MPa (3630 PSI)

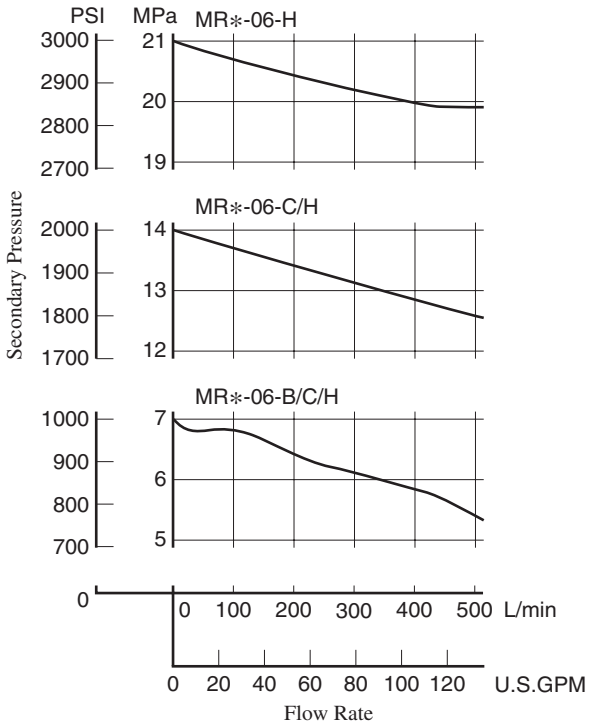

Secondary Pressure vs. Max. Flow

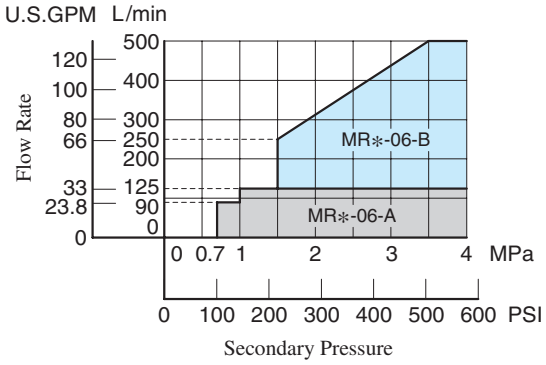

MRP-06-∗-30/3090
MRA-06-∗-30/3090
MRB-06-∗-30/3090

DIMENSIONS IN MILLIMETRES (INCHES)

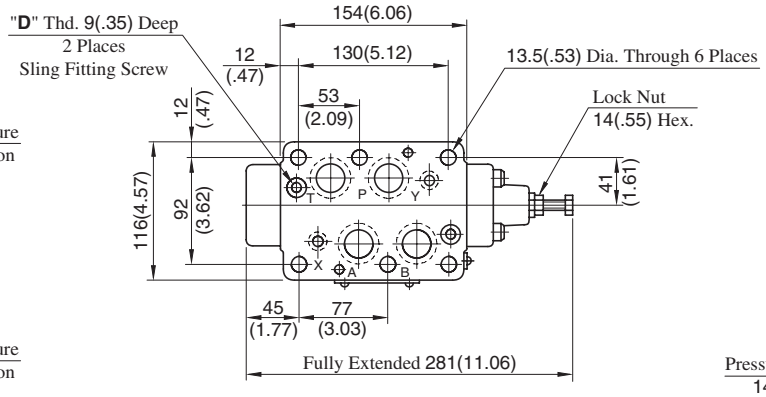

View Arrow Z

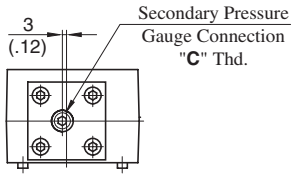

MRP-06

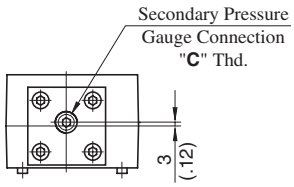

MRA-06

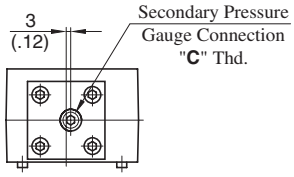

MRB-06

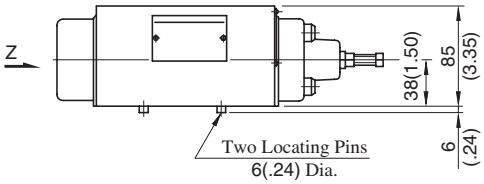

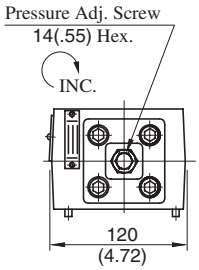

Approx. Mass..... 11.1 kg (24.5 lbs.)

Model Numbers	Thread Size	
	"C" Thd.	"D" Thd.
MR∗-06-∗-30	Rc 1/4 = 1/4 BSP.Tr	M8
MR∗-06-∗-3090	1/4 NPT	5/16-18 UNC

Spare Parts List

MRP-06-∗-30/3090
MRA-06-∗-30/3090
MRB-06-∗-30/3090

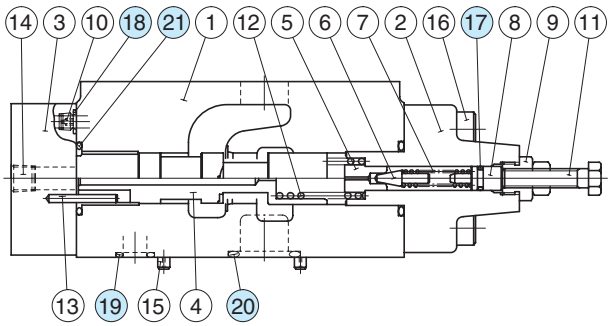

List of Seals

Item	Name of Parts	Part Numbers	Qty.	Remarks
17	O-Ring	SO-NA-P9	1	Included in Seal Kit Kit No.: KS-MRP-06-10
18	O-Ring	SO-NB-P9	5	
19	O-Ring	SO-NB-P14	2	
20	O-Ring	SO-NB-P28	4	
21	O-Ring	SO-NB-P30	2	

Throttle and Check Modular Valves

Specifications

Model Numbers	Max. Operating Pressure MPa (PSI)	Max. Flow L/min (U.S.GPM)
MSA-06-⁎-30/3090 MSB-06-⁎-30/3090 MSW-06-⁎-30/3090	25 (3630)	500 (132)

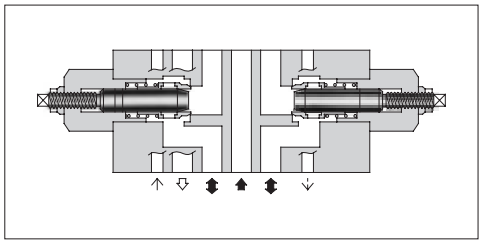

Model Number Designation

F-	MSW	-06	-X	-30	⁎
Special Seals	Series Number	Valve Size	Direction of Flow	Design Number	Design Standard
F: Special Seals for Phosphate Ester Type Fluids (Omit if not required)	**MSA :** Throttle and Check Valve for A-Line **MSB :** Throttle and Check Valve for B-Line **MSW :** Throttle and Check Valve for A&B-Lines	**06**	**X :** Metre-out **Y :** Metre-in	**30**	Refer to ★

★ Design Standards: None ..... Japanese Standard "JIS" and European Design Standard
90 ..... N. American Design Standard

Instructions

- To make flow rate adjustment, loosen lock nut and turn the flow adjustment screw clockwise or anti-clockwise. To throttle the flow, turn the screw clockwise. Be sure to re-tighten the lock nut firmly after the adjustment of the flow rate is completed.

Graphic Symbols

Metre-out	Metre-in
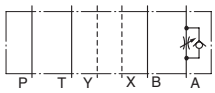 MSA-06-X	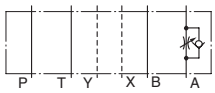 MSA-06-Y
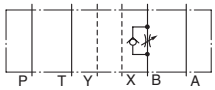 MSB-06-X	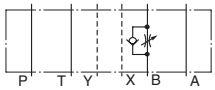 MSB-06-Y
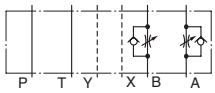 MSW-06-X	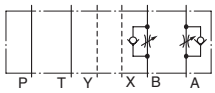 MSW-06-Y

Typical Performance Characteristics

Hydraulic Fluid: Viscosity 35 mm^2/s (164 SSU), Specific Gravity 0.850

Pressure Drop

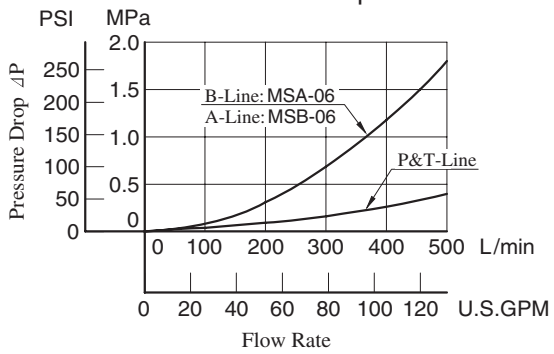

Pressure Drop at Throttle Fully Open

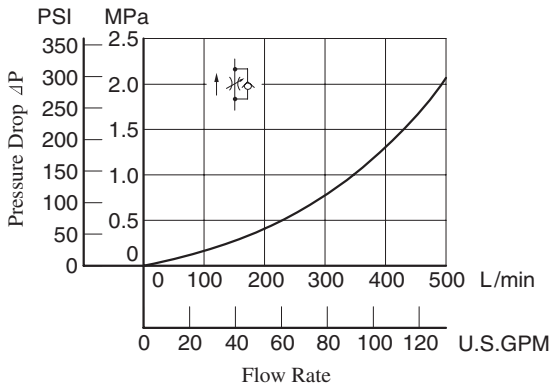

Pressure Drop for Free Flow

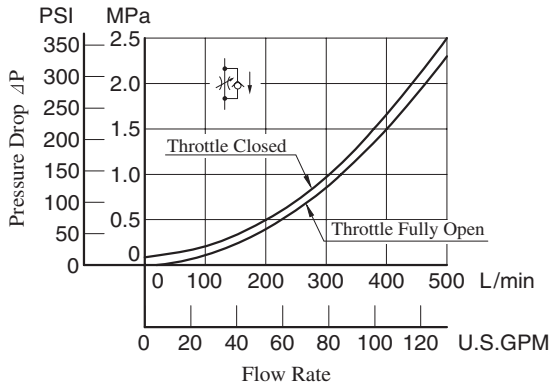

Metred Flow vs. Screw Position

ΔP: Differential Pressure MPa (PSI)

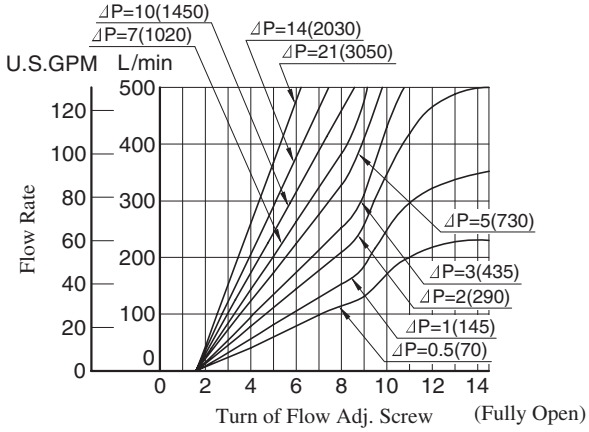

MSW-06-X/Y-30/3090

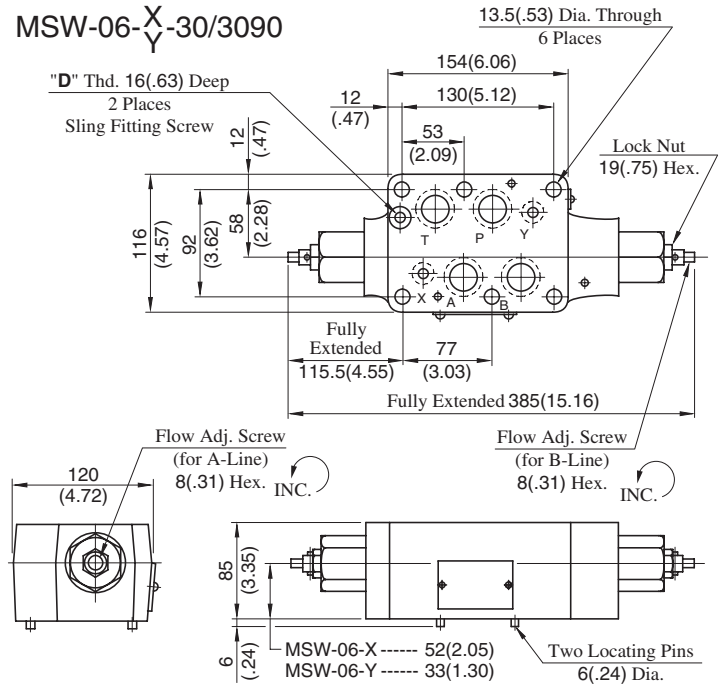

Model Numbers	"D" Thd.
MS∗-06-∗-30	M8
MS∗-06-∗-3090	5/16-18 UNC

Approx. Mass..... 12.2 kg (26.9 lbs.)

DIMENSIONS IN MILLIMETRES (INCHES)

MSA-06-X/Y-30/3090

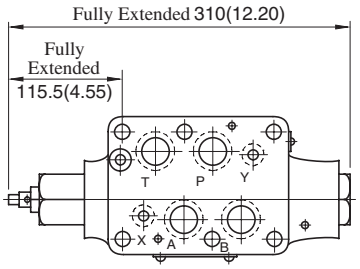

Approx. Mass..... 12 kg (26.5 lbs.)

- For other dimensions, refer to "MSW-06" drawing left.

MSB-06-X/Y-30/3090

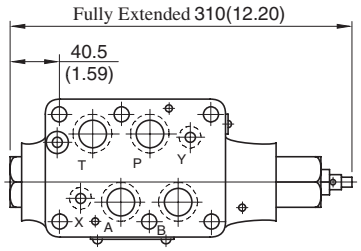

Approx. Mass..... 12 kg (26.5 lbs.)

- For other dimensions, refer to "MSW-06" drawing left.

Spare Parts List

MSA-06-∗-30/3090

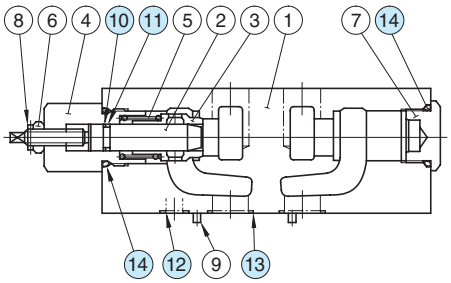

MSB-06-∗-30/3090

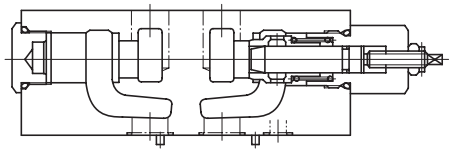

MSW-06-∗-30/3090

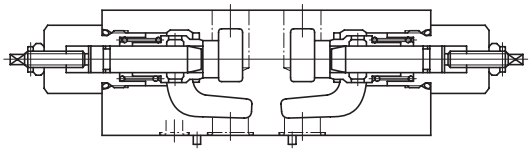

List of Seals

Item	Name of Parts	Part Numbers	Quantity		
			MSA-06	MSB-06	MSW-06
10	Back Up Ring	SO-BB-P14	1	1	2
11	O-Ring	SO-NA-P14	1	1	2
12	O-Ring	SO-NB-P14	2	2	2
13	O-Ring	SO-NB-P28	4	4	4
14	O-Ring	SO-NB-P32	2	2	2

Note: When ordering seals, please specify the seal kit number from the table right.

List of Seal Kits

Valve Model Numbers	Seal Kit Numbers
MSA-06	KS-MSA-06-10
MSB-06	
MSW-06	KS-MSW-06-10

Pilot Operated Check Modular Valves

Specifications

Model Numbers	Max. Operating Pressure MPa (PSI)	Max. Flow L/min (U.S.GPM)
MPA-06∗-∗-∗-30/3090 MPB-06∗-∗-∗-30/3090 MPW-06-∗-30/3090	25 (3630)	500 (132)

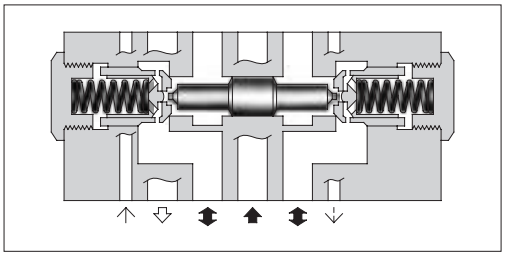

Model Number Designation

F-	MPA	-06	S	-2	-X	-30	∗
Special Seals	Series Number	Valve Size	Port Tapping Feature of Pilot-Drain Port ★1	Cracking Pressure MPa (PSI)	Pilot-Drain ★2 Connection	Design Number	Design Standard
F: Special Seals for Phosphate Ester Type Fluids (Omit if not required)	**MPA :** Pilot Operated Check Valve for A-Line **MPB :** Pilot Operated Check Valve for B-Line **MPW :** Pilot Operated Check Valve for A&B-Lines	**06**	**None :** Taper Thread **S :** Straight Thread (Applicable only for Japanese Std. "JIS")	**2 :** 0.2 (29) **4 :** 0.4 (58)	**None :** Internal Pilot-Internal Drain **X :** External Pilot-External Drain **Y :** External Pilot-Internal Drain	**30**	Refer to ★3

★1. This item applies only to External Pilot or External Drain Type.
★2. Only "None: Internal Pilot-Internal Drain Type" is available for MPW (for "A&B-Lines").
★3. Design Standards: None ..... Japanese Standard "JIS" and European Design Standard
90 ..... N. American Design Standard

Graphic Symbols

Pilot-Drain type / Model No.	Internal pilot-Internal drain type	Exnternal pilot-External drain type	External pilot-Internal drain type
MPA-06	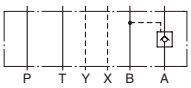 MPA-06-∗	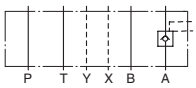 MPA-06∗-∗-X	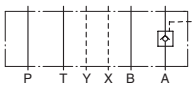 MPA-06∗-∗-Y
MPB-06	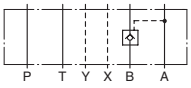 MPB-06-∗	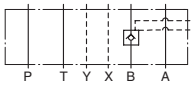 MPB-06∗-∗-X	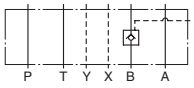 MPB-06∗-∗-Y
MPW-06	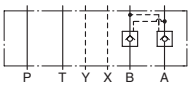 MPW-06-∗	———	———

Typical Performance Characteristics

Hydraulic Fluid: Viscosity 35 mm^2/s (164 SSU), Specific Gravity 0.850

Pressure Drop

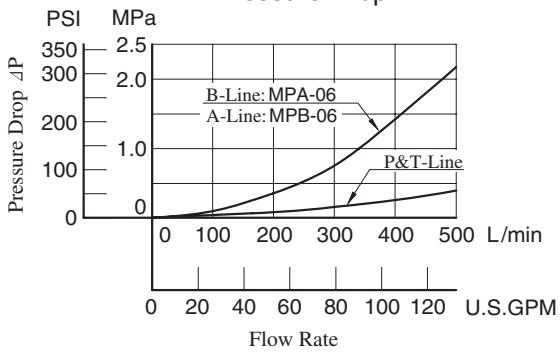

Pressure Drop for Reversed Controlled Flow

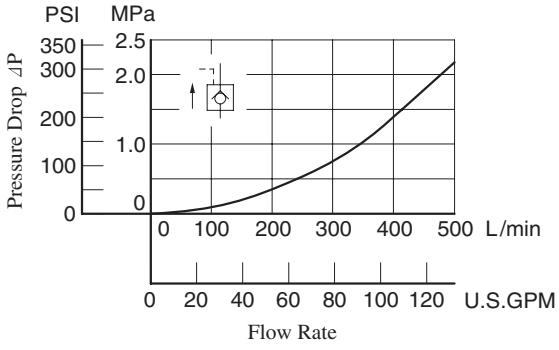

Pressure Drop for Free Flow

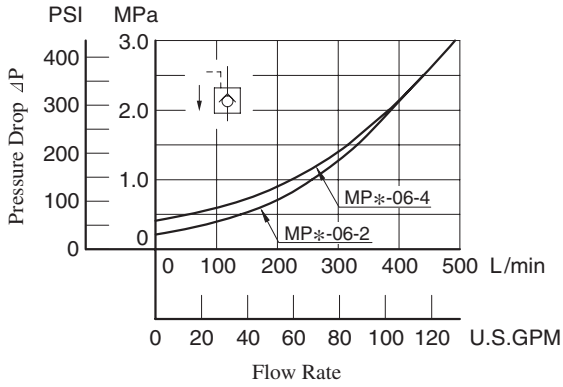

Min. Pilot Pressure

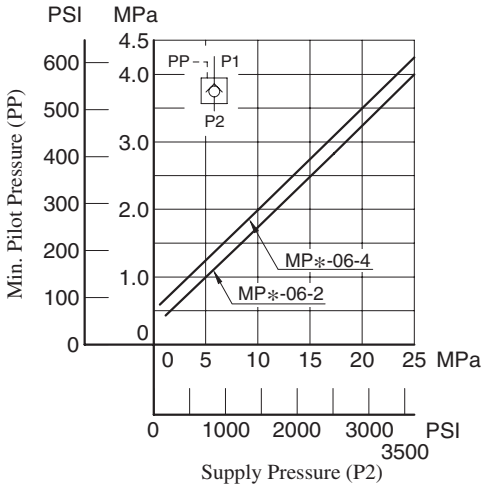

MPA-06-∗-30/3090 (Internal Pilot-Internal Drain Type)
MPB-06-∗-30/3090
MPW-06-∗-30/3090

DIMENSIONS IN MILLIMETRES (INCHES)

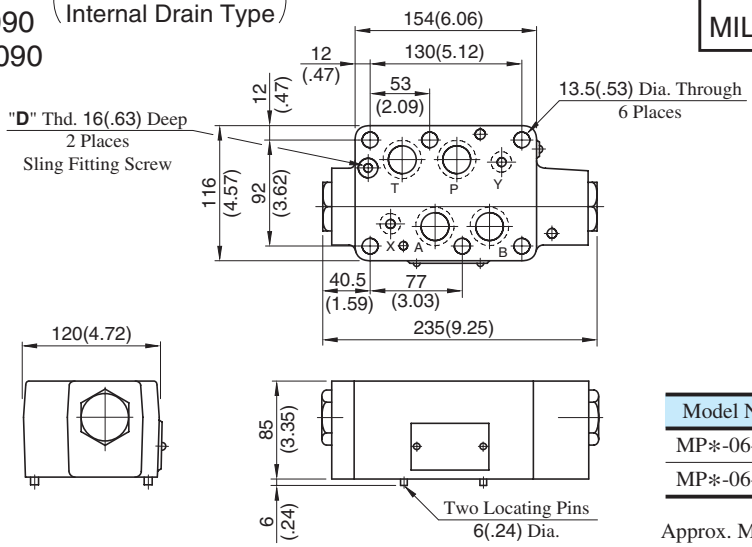

Model Numbers	"D" Thd.
MP∗-06-∗-30	M8
MP∗-06-∗-3090	5/16-18 UNC

Approx. Mass..... 11.6 kg (25.6 lbs.)

MPA-06∗-∗-X-30/3090 (External Pilot-External Drain Type)

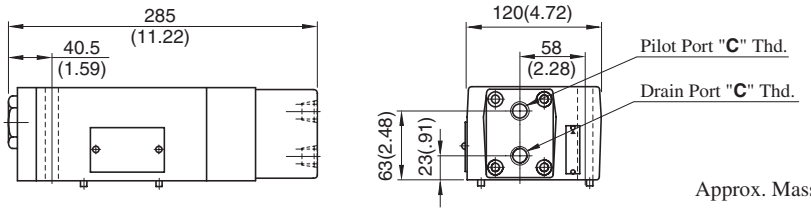

Approx. Mass..... 13 kg (28.7 lbs.)

MPA-06∗-∗-Y-30/3090 (External Pilot-Internal Drain Type)

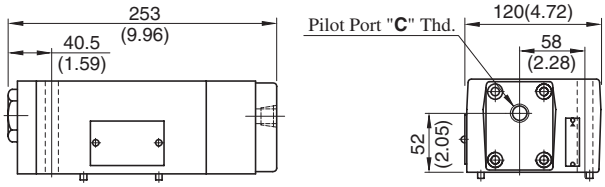

Model Numbers	Thread Size "C" Thd.
MPA-06-∗-∗-30	Rc 3/8 = 3/8 BSP. Tr
MPA-06-∗-∗-3090	3/8 NPT
MPA-06S-∗-∗-30	G 3/8

Approx. Mass..... 11.6 kg (25.6 lbs.)

- For other dimensions, refer to "Internal pilot-Internal drain type" drawing above.

MPB-06∗-∗-X-30/3090 (External Pilot-External Drain Type)

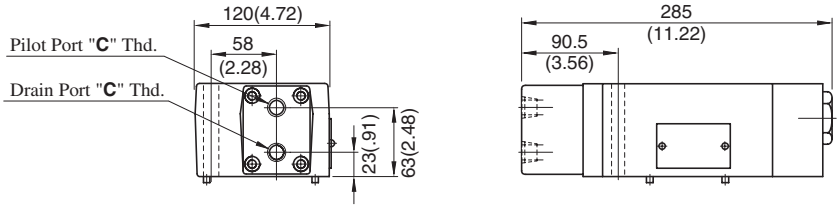

Approx. Mass..... 13 kg (28.7 lbs.)

MPB-06∗-∗-Y-30/3090 (External Pilot-Internal Drain Type)

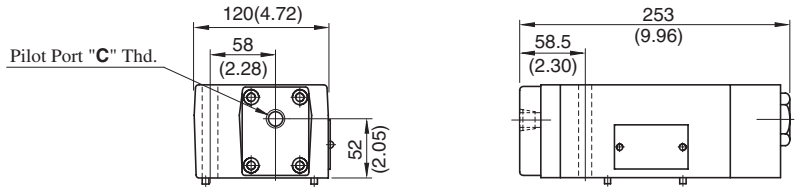

Model Numbers	Thread Size "C" Thd.
MPB-06-∗-∗-30	Rc 3/8 = 3/8 BSP. Tr
MPB-06-∗-∗-3090	3/8 NPT
MPB-06S-∗-∗-30	G 3/8

Approx. Mass..... 11.6 kg (25.6 lbs.)

- For other dimensions, refer to "Internal pilot-Internal drain type" drawing above.

Spare Parts List

Internal Pilot-Internal Drain Type

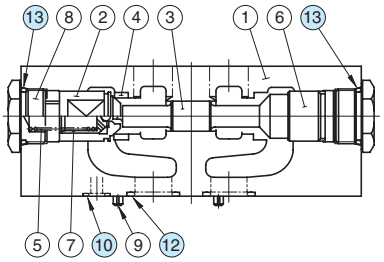

MPA-06-∗-30/3090

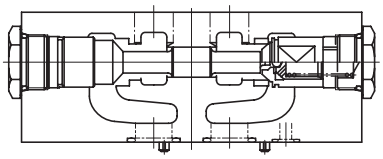

MPB-06-∗-30/3090

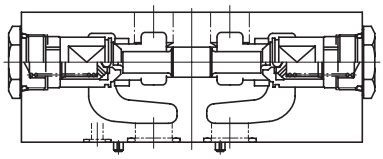

MPW-06-∗-30/3090

External Pilot-External Drain Type

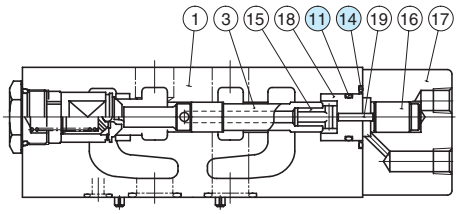

MPA-06∗-∗-X-30/3090

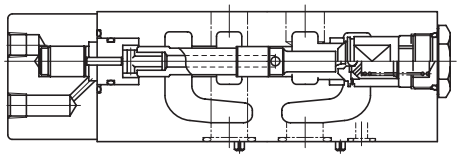

MPB-06∗-∗-X-30/3090

External Pilot-Internal Drain Type

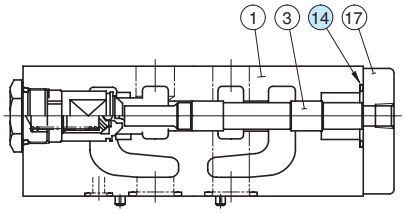

MPA-06∗-∗-Y-30/3090

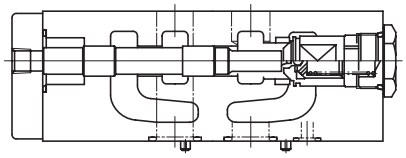

MPB-06∗-∗-Y-30/3090

List of Seals

Item	Name of Parts	Part Numbers	Quantity		
			Internal Pilot-Internal Drain	External Pilot-External Drain	External Pilot-Internal Drain
10	O-Ring	SO-NB-P14	2	2	2
11	O-Ring	SO-NA-P26	—	1	—
12	O-Ring	SO-NB-P28	4	4	4
13	O-Ring	SO-NB-P32	2	1	1
14	O-Ring	SO-NB-P36	—	1	1

Note: When ordering seals, please specify the seal kit number from the table right.

List of Seal Kits

Valve Model Numbers	Seal Kit Numbers
MPA-06-∗	KS-MPA-06-10
MPB-06-∗	
MPW-06-∗	
MPA-06∗-∗-X	KS-MPA-06-X-10
MPB-06∗-∗-X	
MPA-06∗-∗-Y	KS-MPA-06-Y-10
MPB-06∗-∗-Y	

Mounting Bolt Kits For Modular Valves

Valves are mounted with six stud bolts. Valve combination varies according to the circuit type. Hence, the mounting bolt kits are available on a combination type basis. When ordering the mounting bolt kit, be sure to give the bolt kit model number from the table below.

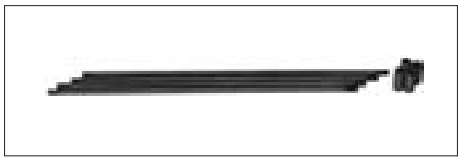

Model Number Designation

MBK	-06	-04	-30	∗
Series Number	Size of Modular Valve	Bolt Number	Design Number	Design Standard
MBK: Mounting Bolt Kits for Modular Valves	**06**	**01, 02, 03, 04**	**30**	**None:** Japanese Standard "JIS" and European Design Standard **90:** N.American Design Standard

Bolt Kits Selection Chart

Bolt Kit Model Numbers	Quantity of Valves to be Stacked		Approx. Mass kg (lbs.)
	Sol. Cont. Pilot Operated Directional Valves (∗-DSHG-06)	Modular Valve	
MBK-06-01-30∗	1	1	1.1(2.4)
MBK-06-02-30∗	1	2	1.5(3.3)
MBK-06-03-30∗	1	3	2.0(4.4)
MBK-06-04-30∗	1	4	2.4(5.3)

- **Bolt Kit Composition**

  Stud Bolt ------ 6 Pcs.
  Nut ---------- 6 Pcs.
  } 1 Set

- **Tightening Torque:**

  50-60 Nm (443-531 in. lbs.)

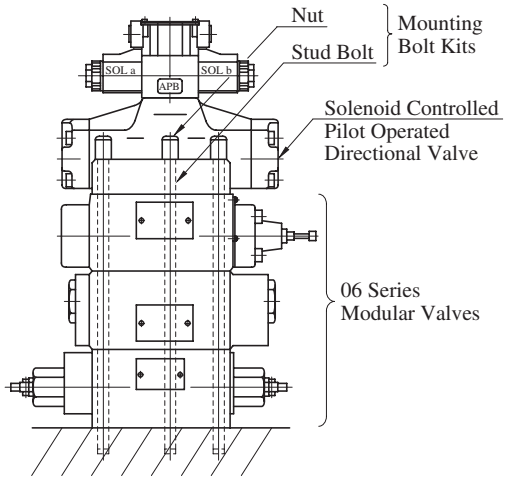

Stacking Example

MBK-06-∗-30/3090

DIMENSIONS IN MILLIMETRES (INCHES)

- **Stud Bolt**

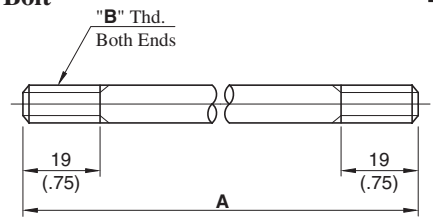

Model Numbers	A mm (in.)
MBK-06-01	161 (6.34)
MBK-06-02	246 (9.69)
MBK-06-03	331 (13.03)
MBK-06-04	416 (16.38)

- **Nut**

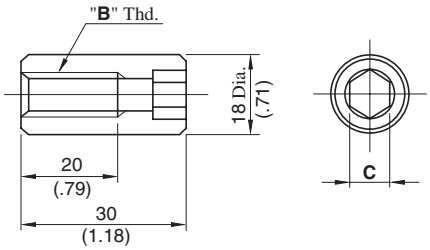

Model Numbers	"B" Thd.	C
MBK-06-∗-30	M12	10 (.39)
MBK-06-∗-3090	1/2-13 UNC	9.5 (3/8)

Mounting Surface Dimensions for 3/4 Modular Valve

When mounting 06 series modular valve, be sure to use a sub-plate for 3/4 solenoid controlled pilot operated directional valves.

Name	Sub-plate Model Number	Page
Sub-plate for 3/4 Solenoid Controlled Pilot Operated Directional Valves	DHGM-06∗-50/5080/5090	402

Also, when no sub-plates are used, be sure to use the following mounting surface.

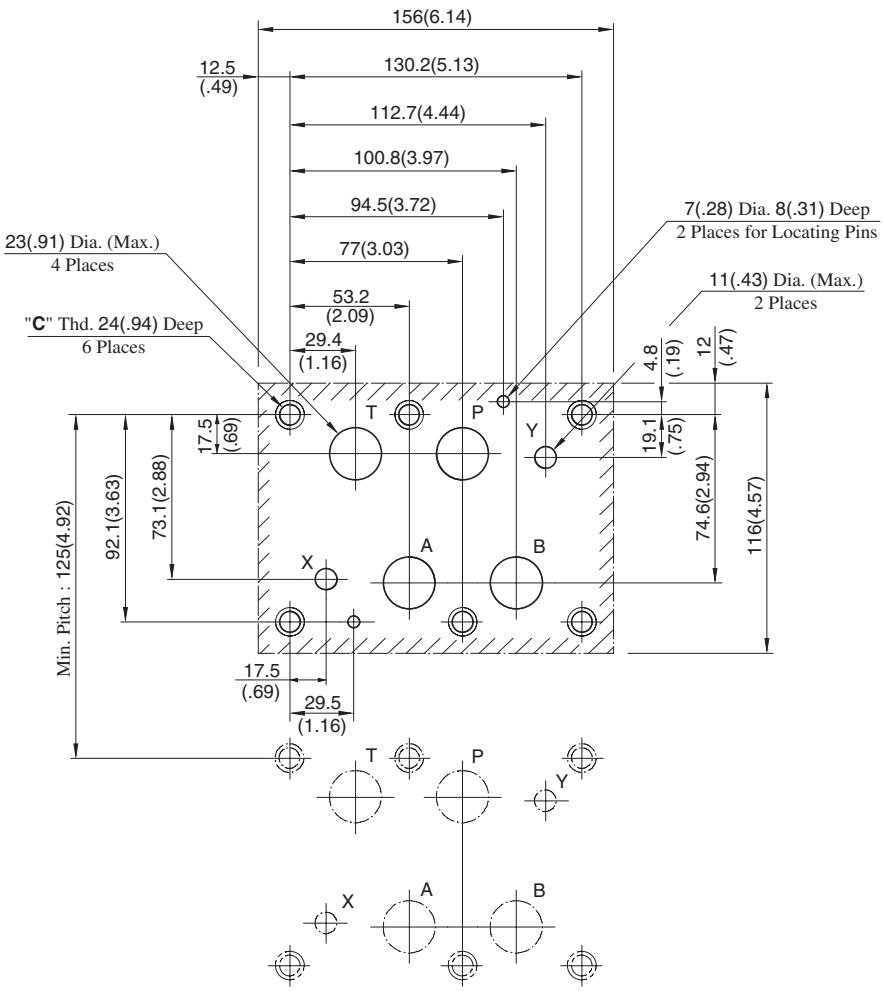

Design Std.	"C" Thd.
Japanese std. "JIS" and European Design Std.	M12
N. American Design Std.	1/2-13 UNC

1¼ Modular Valves

Type of Modular Valve

Class	Model Numbers	Graphic Symbols	Page
	Solenoid Controlled Pilot Operated Directional Valve ★ (S-)DSHG-10-∗∗∗-∗-43/4390	P T Y X B A	381
Pressure Control Valves	Reducing Valves (for "P-Line") MRP-10-∗-30/3090		634
	Reducing Valves (for "A-Line") MRA-10-∗-30/3090		634
	Reducing Valves (for "B-Line") MRB-10-∗-30/3090		634
Flow Control Valves	Throttle and Check Valves (for "A-Line", Metre-out) MSA-10-X-30/3090		637
	Throttle and Check Valves (for "A-Line", Metre-in) MSA-10-Y-30/3090		637
	Throttle and Check Valves (for "B-Line", Metre-out) MSB-10-X-30/3090		637
	Throttle and Check Valves (for "B-Line", Metre-in) MSB-10-Y-30/3090		637
	Throttle and Check Valves (for "A&B-Lines", Metre-out) MSW-10-X-30/3090		637
	Throttle and Check Valves (for "A&B-Lines", Metre-in) MSW-10-Y-30/3090		637

Class	Model Numbers	Graphic Symbols	Page
Directional Control Valves	Pilot Operated Check Valves (for "A-Line", Internal Pilot-) Internal Drain Type) MPA-10-∗-30/3090		640
	Pilot Operated Check Valves (for "A-Line", External Pilot-) External Drain Type) MPA-10∗-∗-X-30/3090		640
	Pilot Operated Check Valves (for "A-Line", External Pilot-) Internal Drain Type) MPA-10∗-∗-Y-30/3090		640
	Pilot Operated Check Valves (for "B-Line", Internal Pilot-) Internal Drain Type) MPB-10-∗-30/3090		640
	Pilot Operated Check Valves (for "B-Line", External Pilot-) External Drain Type) MPB-10∗-∗-X-30/3090		640
	Pilot Operated Check Valves (for "B-Line", External Pilot-) Internal Drain Type) MPB-10∗-∗-Y-30/3090		640
	Pilot Operated Check Valves (for "A&B-Lines", Internal Pilot-) Internal Drain Type) MPW-10-∗-30/3090		640
Mounting Bolts	Bolt Kits MBK-10-∗-10/1090	———	644

★ Because drain ports "V" and "W" are not provided for solenoid controlled pilot operated directional valves of Pressure Centred Type (3H∗) and models with Pilot Piston (P∗), those valves cannot be used in combination with modular valves.

Reducing Modular Valves

Specifications

Model Numbers	Max. Operating Pressure MPa(PSI)	Max. Flow★ L/min (U.S.GPM)
MR∗-10-A-30/3090	25 (3630)	250 (66)
B MR∗-10-C-30/3090 H		800 (211)

★ In the pressure adjustment ranges "A" and "B", maximum flow rates are limited by the pressure setting on the secondary side.
Referring to the secondary pressure vs. maximum flow characteristics on the following page, use the valve at the maximum flow rate within a zone highlighted with .

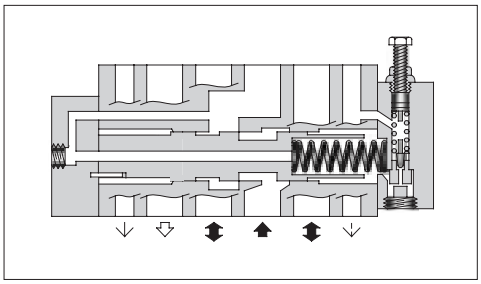

Model Number Designation

F-	MRP	-10	-B	-30	∗
Special Seals	Series Number	Valve Size	Pres. Adj. Range MPa (PSI)	Design Number	Design Standard
F: Special Seals for Phosphate Ester Type Fluids (Omit if not required)	**MRP:** Reducing Valve for P-Line **MRA:** Reducing Valve for A-Line **MRB:** Reducing Valve for B-Line	**10**	**A:** 0.7-7 (100-1020) **B:** 1.5-7 (220-1020) **C:** 3.5-14 (510-2030) **H:** 7-21 (1020-3050)	**30**	Refer to ★

★ Design Standards: None ..... Japanese Standard "JIS" and European Design Standard
90 ..... N. American Design Standard

Instructions

- Connect **Drain Line (Y port)** to oil tank independently so as to obtain stable pressure setting. At the same time, the solenoid controlled pilot operated directional valve to be used in combination with this valve must be of internal drain type (with T).
- To make pressure adjustment, loosen the lock nut and turn the pressure adjustment screw clockwise or anti-clockwise. For an increase of pressure, turn the screw clockwise. Be sure to re-tighten the lock nut firmly after making adjustment to the pressure.

Graphic Symbols

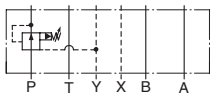

MRP-10

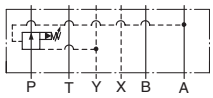

MRA-10

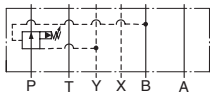

MRB-10

Typical Performance Characteristics

Hydraulic Fluid: Viscosity 35 mm^2/s (164 SSU), Specific Gravity 0.850

Pressure Drop

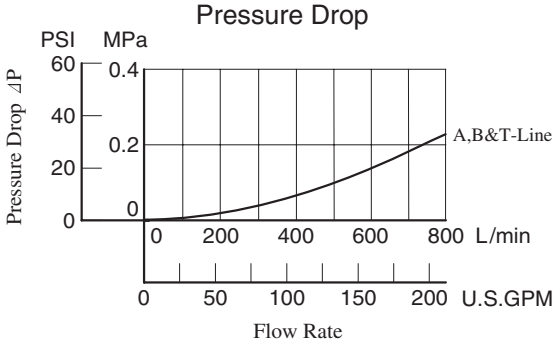

Pressure Drop at Spool Fully Open (P-Line)

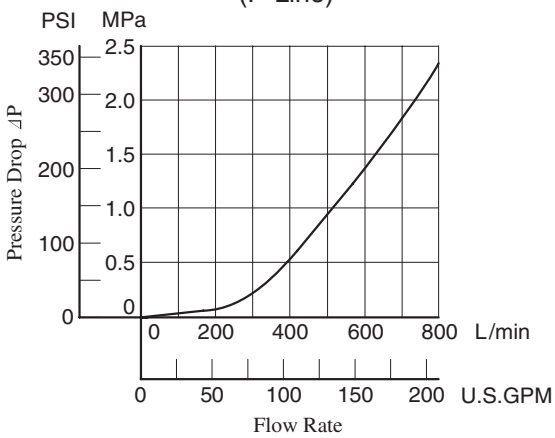

Pilot Flow

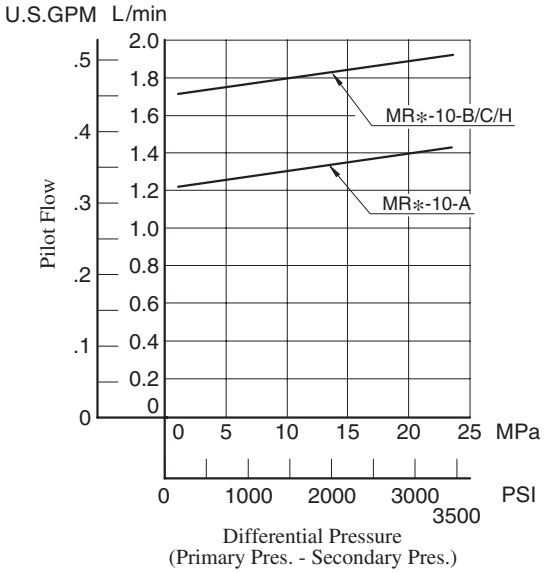

Nominal Override Characteristics

Primary Pressure 25 MPa (3630 PSI)

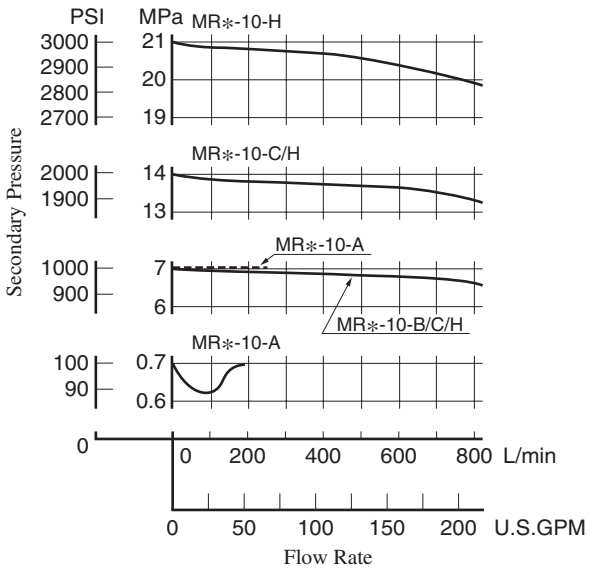

Secondary Pressure vs. Max. Flow

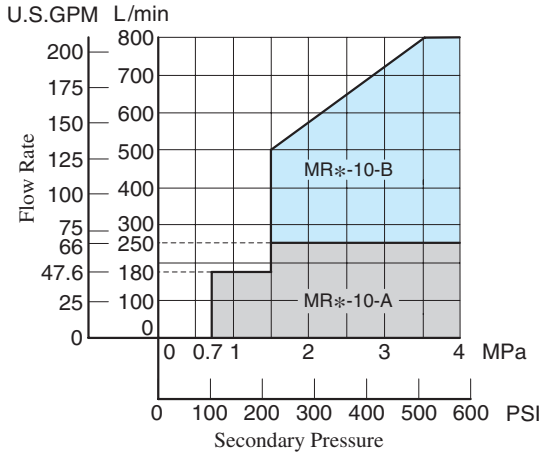

F

10 Series Modular Valves

MRP-10-∗-30/3090
MRA-10-∗-30/3090
MRB-10-∗-30/3090

DIMENSIONS IN MILLIMETRES (INCHES)

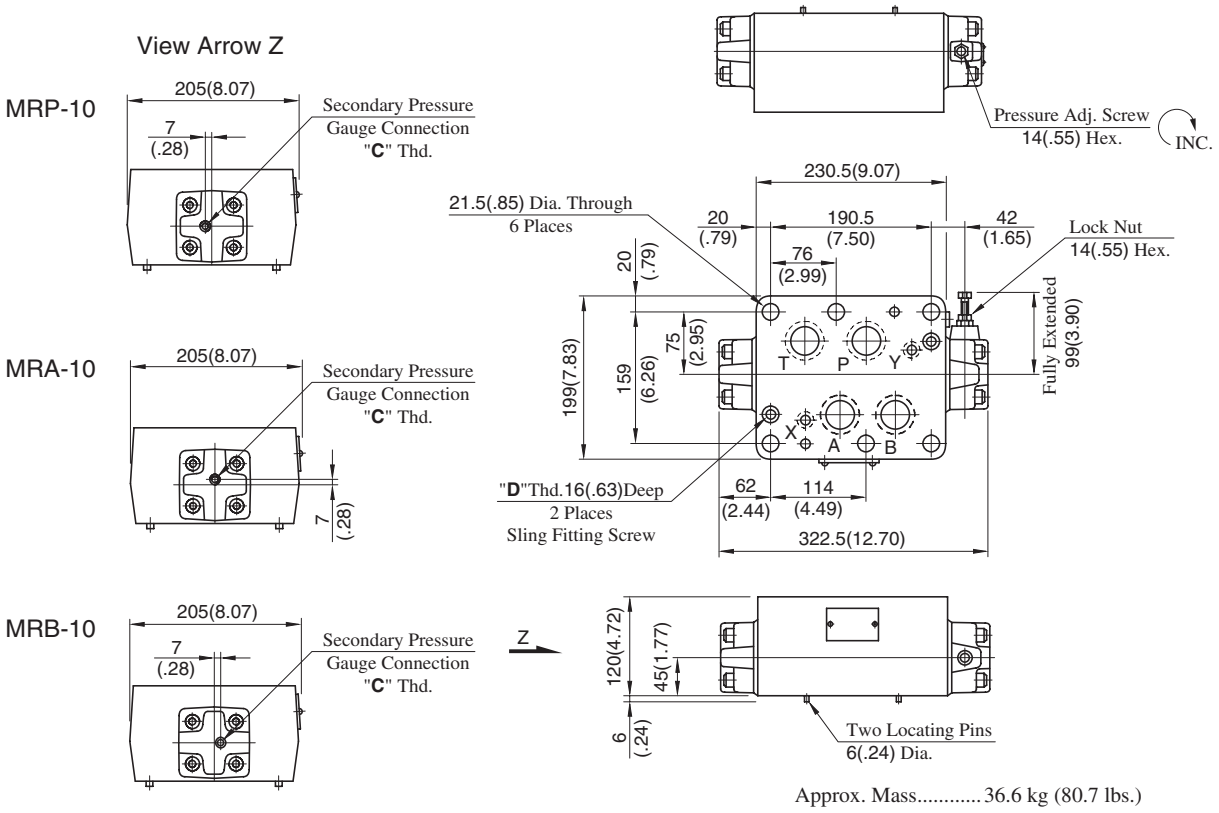

Approx. Mass..... 36.6 kg (80.7 lbs.)

Model Numbers	Thread Size	
	"C" Thd.	"D" Thd.
MR∗-10-∗-30	Rc 1/4 = 1/4 BSP.Tr	M8
MR∗-10-∗-3090	1/4 NPT	5/16-18 UNC

Spare Parts List

MRP-10-∗-30/3090
MRA-10-∗-30/3090
MRB-10-∗-30/3090

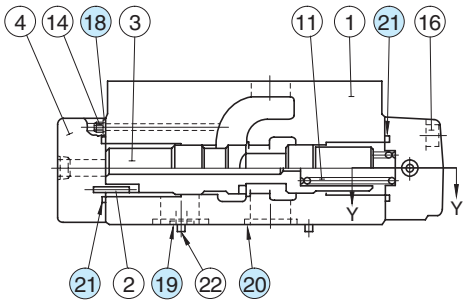

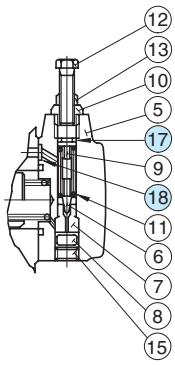

Section Y-Y

List of Seals

Item	Name of Parts	Part Numbers	Qty.	Remarks
17	O-Ring	SO-NA-P9	1	Included in Seal Kit Kit No.: KS-MRP-10-10
18	O-Ring	SO-NB-P9	4	
19	O-Ring	SO-NB-P16	2	
20	O-Ring	SO-NB-P40	4	
21	O-Ring	SO-NB-P44	2	

Throttle and Check Modular Valves

Specifications

Model Numbers	Max. Operating Pressure MPa (PSI)	Max. Flow L/min (U.S.GPM)
MSA-10-∗-30/3090 MSB-10-∗-30/3090 MSW-10-∗-30/3090	25 (3630)	800 (211)

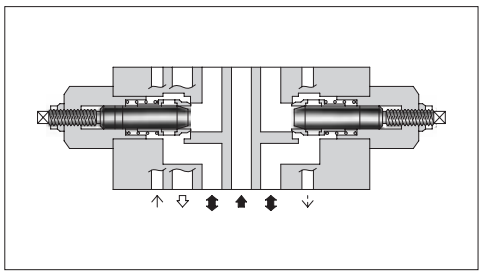

Model Number Designation

F-	MSW	-10	-X	-30	∗
Special Seals	Series Number	Valve Size	Direction of Flow	Design Number	Design Standard
F: Special Seals for Phosphate Ester Type Fluids (Omit if not required)	**MSA :** Throttle and Check Valves for A-Line **MSB :** Throttle and Check Valves for B-Line **MSW :** Throttle and Check Valves for A&B-Lines	**10**	**X :** Metre-out **Y :** Metre-in	**30**	Refer to ★

★ Design Standards: None ..... Japanese Standard "JIS" and European Design Standard
90 ..... N. American Design Standard

Instructions

- To make flow rate adjustment, loosen the lock nut and turn the flow adjustment screw clockwise or anti-clockwise. To throttle the flow, turn the screw clockwise. Be sure to re-tighten the lock nut firmly after the adjustment of the flow rate is completed.

Graphic Symbols

Metre-out	Metre-in
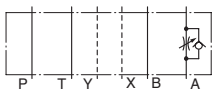 MSA-10-X	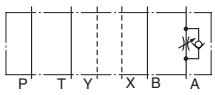 MSA-10-Y
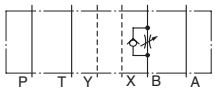 MSB-10-X	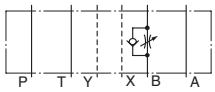 MSB-10-Y
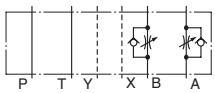 MSW-10-X	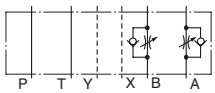 MSW-10-Y

Typical Performance Characteristics

Hydraulic Fluid: Viscosity 35 mm^2/s (164 SSU), Specific Gravity 0.850

Pressure Drop

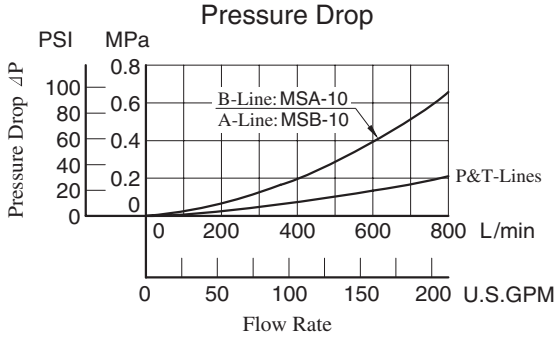

Pressure Drop for Free Flow

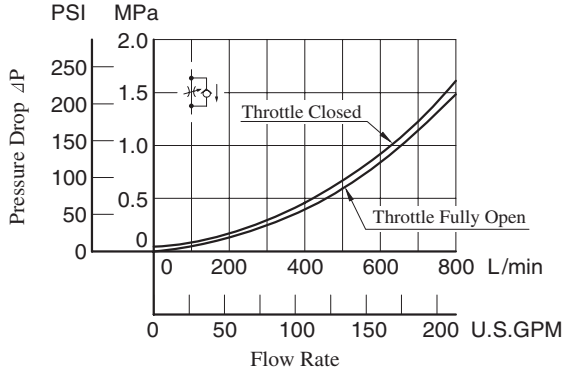

Pressure Drop at Throttle Fully Open

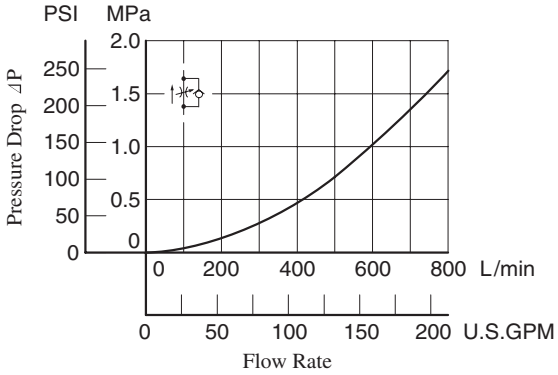

Metred Flow vs. Screw Position

⊿P: Differential Pressure MPa (PSI)

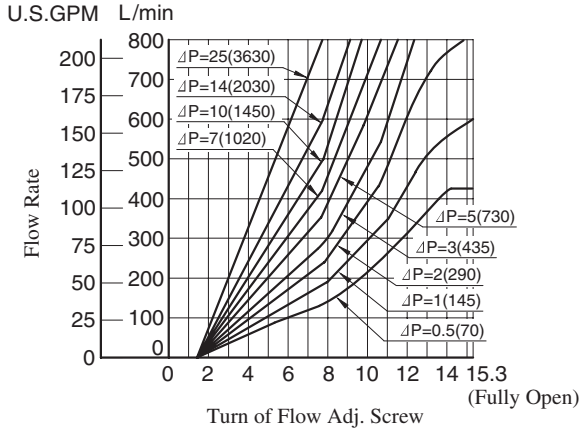

MSW-10-X/Y-30/3090

DIMENSIONS IN MILLIMETRES (INCHES)

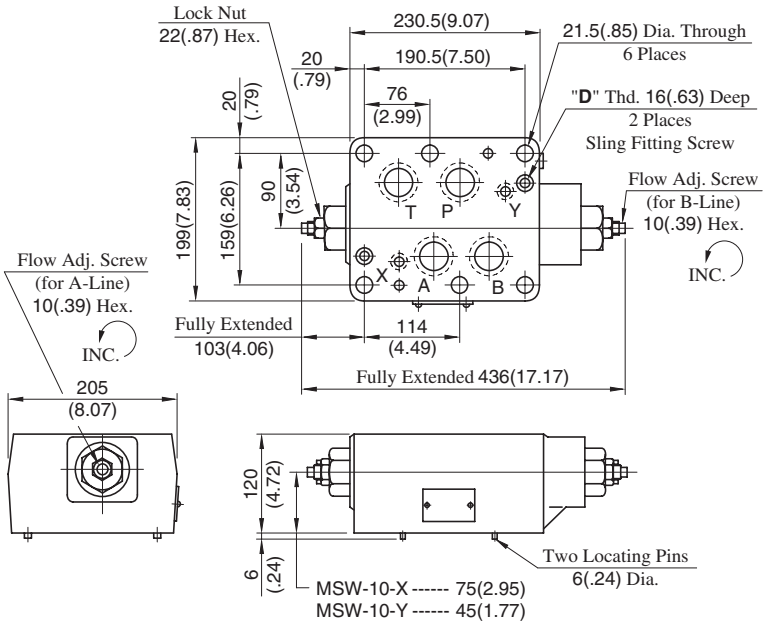

Model Numbers	"D" Thd.
MS∗-10-∗-30	M8
MS∗-10-∗-3090	5/16-18 UNC

Approx. Mass.....35.7 kg (78.7 lbs.)

MSA-10-X/Y-30/3090

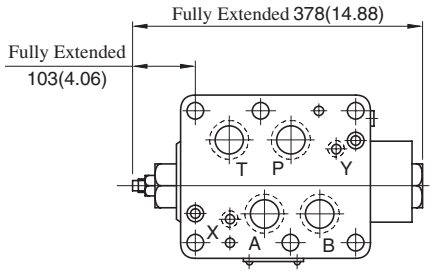

Approx. Mass.....35 kg (77.2 lbs.)

- For other dimensions, refer to "MSW-10" drawing left.

MSB-10-X/Y-30/3090

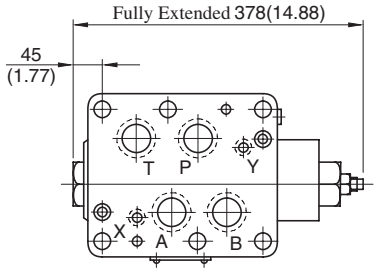

Approx. Mass.....35 kg (77.2 lbs.)

- For other dimensions, refer to "MSW-10" drawing left.

Spare Parts List

MSA-10-∗-30/3090

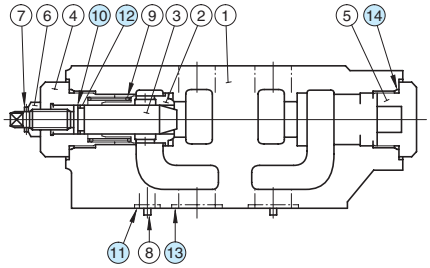

MSB-10-∗-30/3090

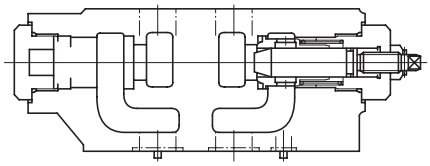

MSW-10-∗-30/3090

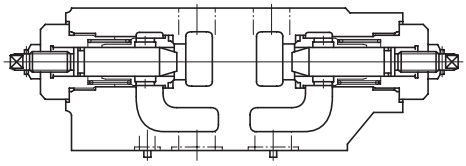

List of Seals

Item	Name of Parts	Part Numbers	Quantity		
			MSA-10	MSB-10	MSW-10
10	Back Up Ring	SO-BB-P20	1	1	2
11	O-Ring	SO-NB-P16	2	2	2
12	O-Ring	SO-NA-P20	1	1	2
13	O-Ring	SO-NB-P40	4	4	4
14	O-Ring	SO-NB-P44	2	2	2

Note: When ordering seals, please specify the seal kit number from the table right.

List of Seal Kits

Valve Model Numbers	Seal Kit Numbers
MSA-10	KS-MSA-10-10
MSB-10	
MSW-10	KS-MSW-10-10

Pilot Operated Check Modular Valves

Specifications

Model Numbers	Max. Operating Pressure MPa (PSI)	Max. Flow L/min (U.S.GPM)
MPA-10∗-∗-∗-30/3090 MPB-10∗-∗-∗-30/3090 MPW-10-∗-30/3090	25 (3630)	800 (211)

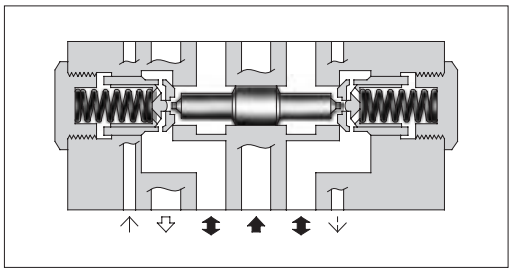

Model Number Designation

F-	MPA	-10	S	-2	-X	-30	∗
Special Seals	Series Number	Valve Size	Port Tapping Feature of Pilot-Drain Port ★1	Cracking Pressure MPa (PSI)	Pilot-Drain ★2 Connection	Design Number	Design Standard
F: Special Seals for Phosphate Ester Type Fluids (Omit if not required)	**MPA :** Pilot Operated Check Valve for A-Line **MPB :** Pilot Operated Check Valve for B-Line **MPW :** Pilot Operated Check Valve for A&B-Lines	**10**	**None :** Taper Thread **S :** Straight Thread (Applicable only for Japanese Std. "JIS")	**2 :** 0.2 (29) **4 :** 0.4 (58)	**None :** Internal Pilot-Internal Drain **X :** External Pilot-External Drain **Y :** External Pilot-Internal Drain	**30**	Refer to ★3

★1. This item applies only to External Pilot or External Drain Type.
★2. Only "None: Internal Pilot-Internal Drain Type" is available for MPW (for "A&B-Lines").
★3. Design Standards: None ..... Japanese Standard "JIS" and European Design Standard
90 ..... N. American Design Standard

Graphic Symbols

Pilot-Drain type / Model No.	Internal Pilot-Internal Drain Type	Exnternal Pilot-External Drain Type	External Pilot-Internal Drain Type
MPA-10	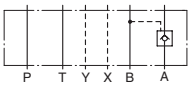 MPA-10-∗	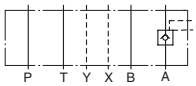 MPA-10∗-∗-X	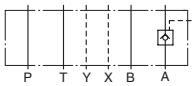 MPA-10∗-∗-Y
MPB-10	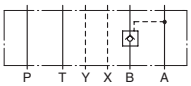 MPB-10-∗	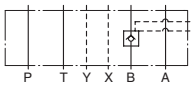 MPB-10∗-∗-X	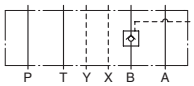 MPB-10∗-∗-Y
MPW-10	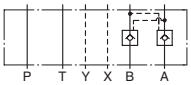 MPW-10-∗	———	———

Typical Performance Characteristics

Hydraulic Fluid: Viscosity 35 mm^2/s (164 SSU), Specific Gravity 0.850

Pressure Drop

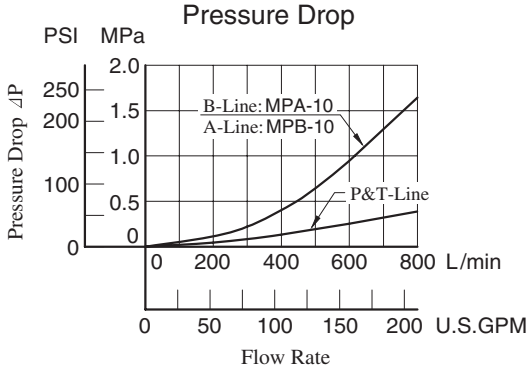

Pressure Drop for Reversed Controlled Flow

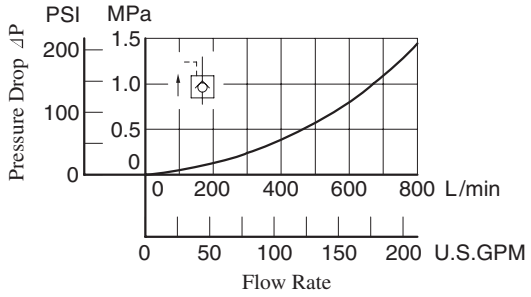

Pressure Drop for Free Flow

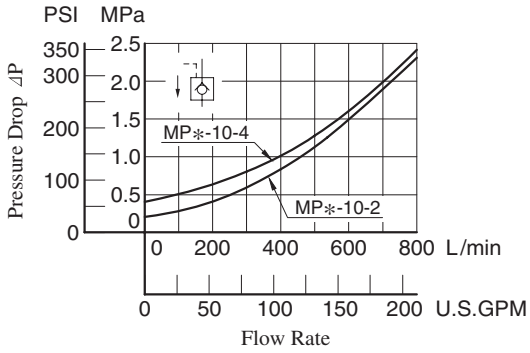

Min. Pilot Pressure

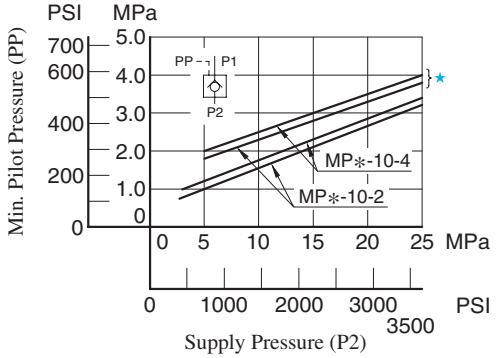

★In case of 500 L/min (132 U.S.GPM) or more.

F

10 Series Modular Valves

MPA-10-∗-30/3090 (Internal Pilot-Internal Drain Type)
MPB-10-∗-30/3090
MPW-10-∗-30/3090

DIMENSIONS IN MILLIMETRES (INCHES)

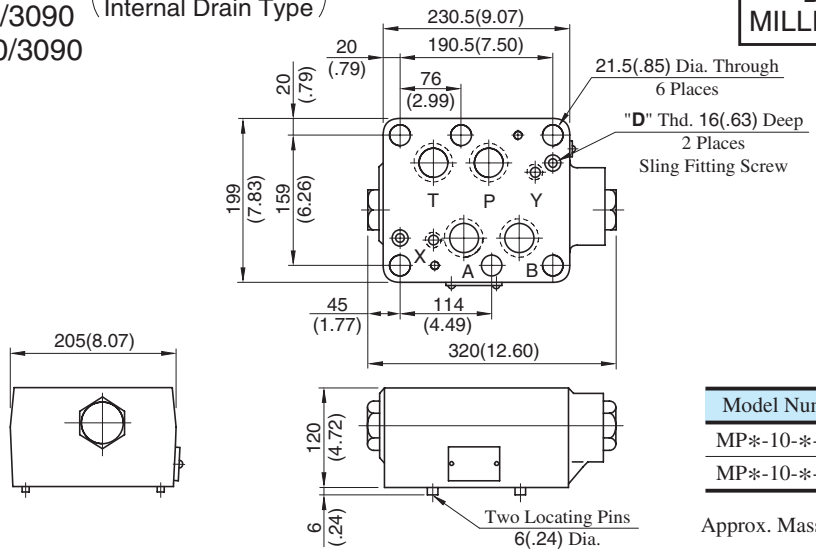

Model Numbers	"D" Thd.
MP∗-10-∗-30	M8
MP∗-10-∗-3090	5/16-18 UNC

Approx. Mass.....36.5 kg (80.5 lbs.)

MPA-10∗-∗-X-30/3090 (External Pilot-External Drain Type)

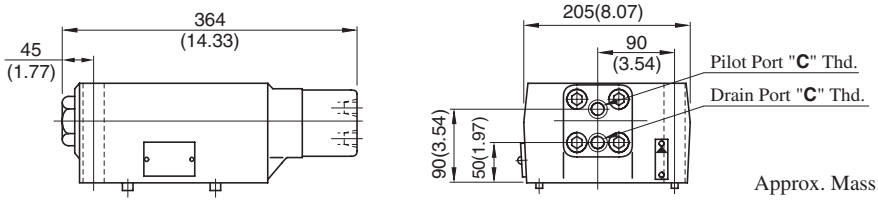

Approx. Mass.....38 kg (83.8 lbs.)

MPA-10∗-∗-Y-30/3090 (External Pilot-Internal Drain Type)

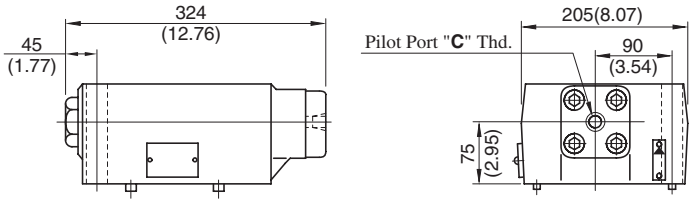

Model Numbers	Thread Size "C" Thd.
MPA-10-∗-∗-30	Rc 3/8 = 3/8 BSP. Tr
MPA-10-∗-∗-3090	3/8 NPT
MPA-10S-∗-∗-30	G 3/8

Approx. Mass.....36.5 kg (80.5 lbs.)

- For other dimensions, refer to "Internal pilot-Internal drain type" drawing above.

MPB-10∗-∗-X-30/3090 (External Pilot-External Drain Type)

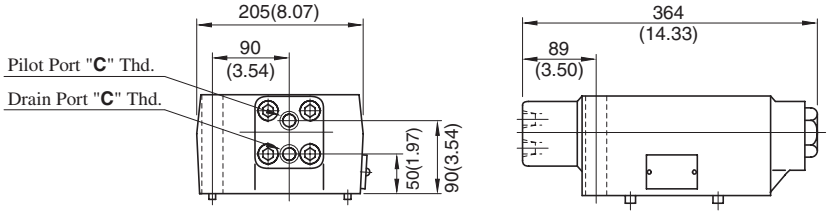

Approx. Mass.....38 kg (83.8 lbs.)

MPB-10∗-∗-Y-30/3090 (External Pilot-Internal Drain Type)

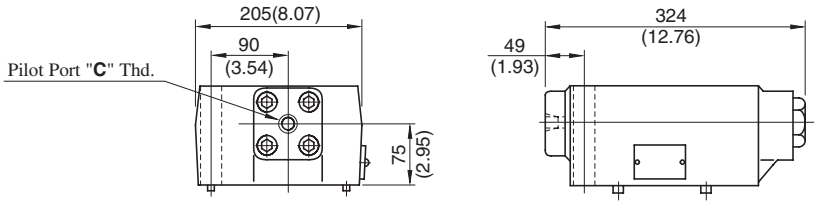

Model Numbers	Thread Size "C" Thd.
MPB-10-∗-∗-30	Rc 3/8 = 3/8 BSP. Tr
MPB-10-∗-∗-3090	3/8 NPT
MPB-10S-∗-∗-30	G 3/8

Approx. Mass.....36.5 kg (80.5 lbs.)

- For other dimensions, refer to "Internal pilot-Internal drain type" drawing above.

Spare Parts List

Internal Pilot-
Internal Drain Type

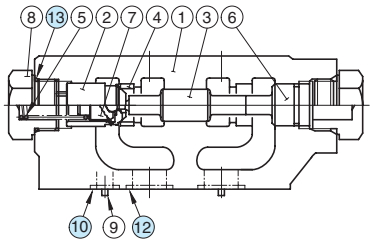

MPA-10-∗-30/3090

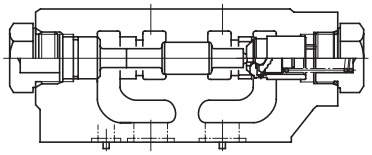

MPB-10-∗-30/3090

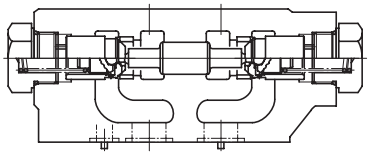

MPW-10-∗-30/3090

External Pilot-
External Drain Type

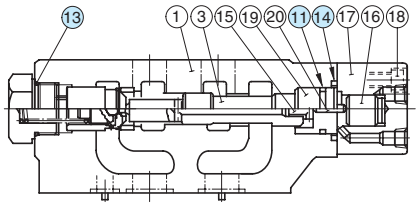

MPA-10∗-∗-X-30/3090

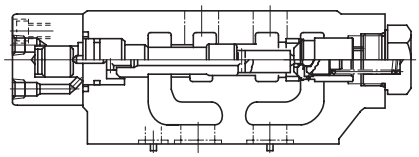

MPB-10∗-∗-X-30/3090

External Pilot-
Internal Drain Type

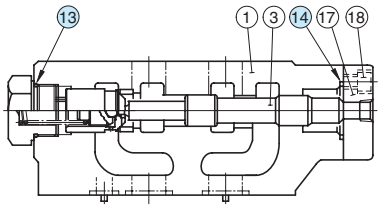

MPA-10∗-∗-Y-30/3090

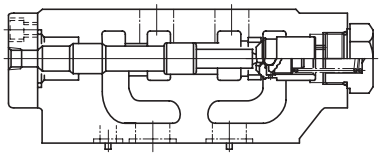

MPB-10∗-∗-Y-30/3090

List of Seals

Item	Name of Parts	Part Numbers	Quantity		
			Internal Pilot-Internal Drain	External Pilot-External Drain	External Pilot-Internal Drain
10	O-Ring	SO-NB-P16	2	2	2
11	O-Ring	SO-NB-P34	—	1	—
12	O-Ring	SO-NB-P40	4	4	4
13	O-Ring	SO-NB-P44	2	1	1
14	O-Ring	SO-NB-P46	—	1	1

Note: When ordering seals, please specify the seal kit number from the table right.

List of Seal Kits

Valve Model Numbers	Seal Kit Numbers
MPA-10-∗	KS-MPA-10-10
MPB-10-∗	
MPW-10-∗	
MPA-10∗-∗-X	KS-MPA-10-X-10
MPB-10∗-∗-X	
MPA-10∗-∗-Y	KS-MPA-10-Y-10
MPB-10∗-∗-Y	

Mounting Bolt Kits For Modular Valves

Valves are mounted with six stud bolts. Valve combination varies according to the circuit type. Hence, the mounting bolt kits are available on a combination type basis. When ordering the mounting bolt kit, be sure to give the bolt kit model number from the table below.

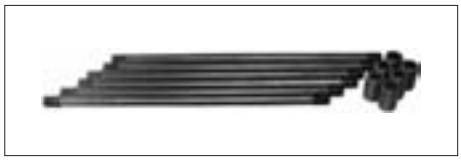

Model Number Designation

MBK	-10	-04	-10	∗
Series Number	Size of Modular Valve	Bolt Number	Design Number	Design Standard
MBK: Mounting Bolt Kits for Modular Valves	**10**	**01, 02, 03, 04**	**10**	**None:** Japanese Standard "JIS" and European Design Standard **90:** N.American Design Standard

Bolt Kits Selection Chart

Model Numbers	Quantity of Valves to be Stacked		Approx. Mass kg (lbs.)
	Sol. Cont. Pilot Operated Directional Valves (∗-DSHG-10)	Modular Valve	
MBK-10-01-10∗	1	1	3.9 (8.6)
MBK-10-02-10∗	1	2	5.7 (12.6)
MBK-10-03-10∗	1	3	7.4 (16.3)
MBK-10-04-10∗	1	4	9.2 (20.3)

- **Bolt Kit Composition**

  Stud Bolt ------ 6 Pcs. } 1 set
  Nut ---------- 6 Pcs.

- **Tightening Torque:**

  150-170 Nm (1330-1505 in. lbs.)

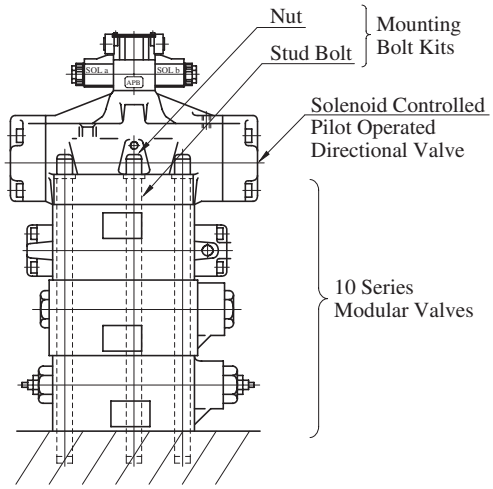

Stacking Example

MBK-10-∗-10/1090

DIMENSIONS IN MILLIMETRES (INCHES)

- **Stud Bolt**

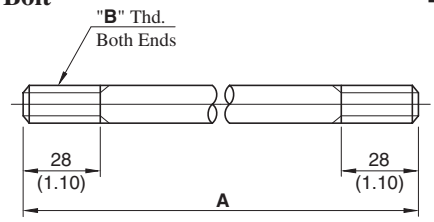

Bolt Numbers	A mm (in.)
MBK-10-01	217 (8.54)
MBK-10-02	337 (13.27)
MBK-10-03	457 (17.99)
MBK-10-04	577 (22.72)

- **Nut**

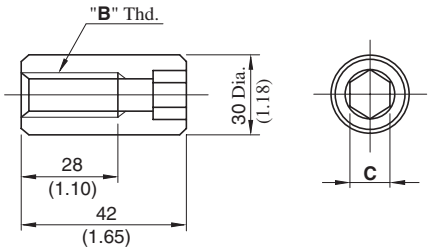

Model Numbers	"B" Thd.	C
MBK-10-∗-10	M20	17 (.67)
MBK-10-∗-1090	3/4-10 UNC	15.9 (5/8)

Mounting Surface Dimensions for 1-1/4 Modular Valve

When mounting 10 series modular valve, be sure to use a sub-plate for 1-1/4 solenoid controlled pilot operated directional valves.

Name	Sub-plate Model Number	Page
Sub-plate for 1-1/4 Solenoid Controlled Pilot Operated Directional Valves	DHGM-10∗-40/4080/4090	403

When no sub-plates are used, be sure to use the following mounting surface.

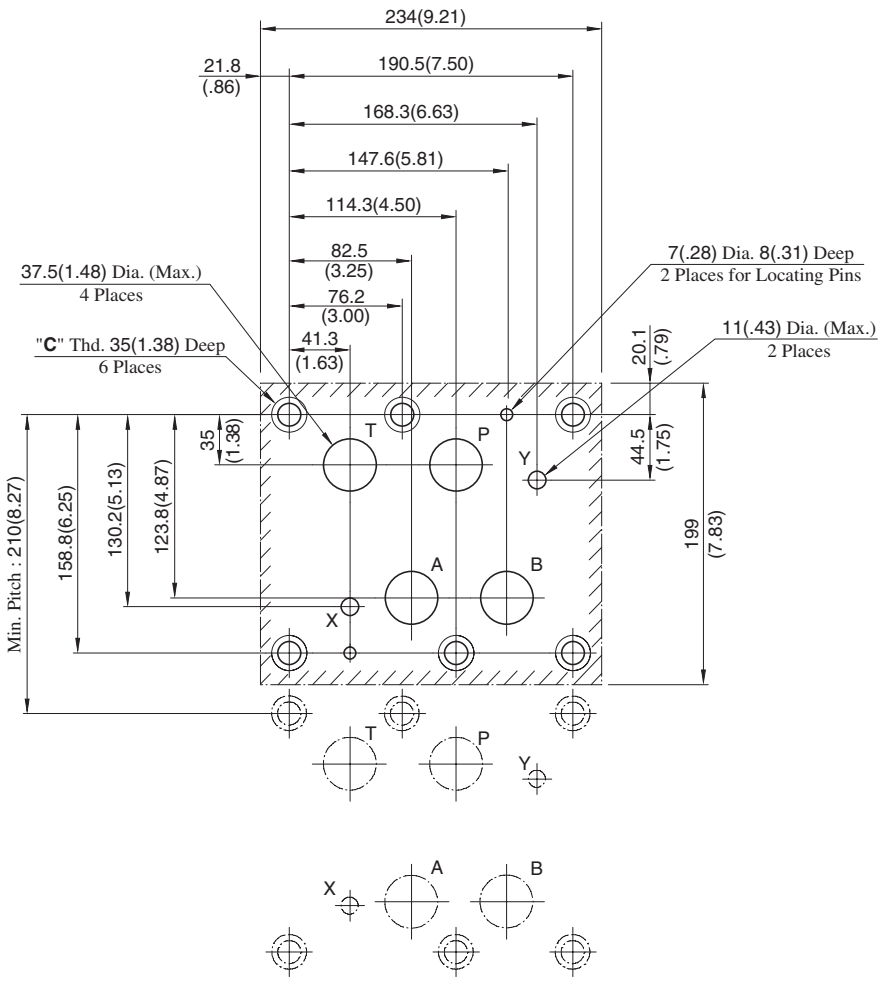

Design Std.	"C" Thd.
Japanese Std. "JIS" and European Design Std.	M20
N. American Design Std.	3/4-10 UNC

G

LOGIC VALVES

Valve Type	Graphic Symbols	Maximum Operating Pressure MPa (PSI)	Rated Flow (U.S.GPM / L/min)	Page
Directional Control Logic Valves Directional and Flow Control Logic Valves	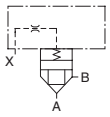	31.5 (4570)	LD 16 25 32 40 50 63 80 100	650
Solenoid Operated Directional Control Logic Valves	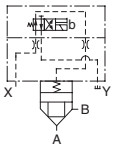	31.5 (4570)	LDS 25 32 40 50 63	651
Relief Logic Valves	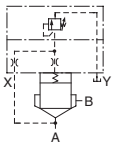	31.5 (4570)	LB 16 25 32 50	652
Solenoid Controlled Relief Logic Valves	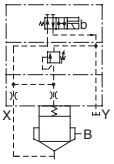	31.5 (4570)	LBS 16 25 32 50	653

Consult Yuken when detailed material such as dimensions figures is required.

Logic Valves

Yuken Logic Valves comprise cartridge typed elements and covers with pilot passages. Various types may be combined for direction, flow rate and pressure control.
Yuken Logic Valves can be incorporated in manifold blocks to form optimum integrated hydraulic circuits and compact hydraulic power units. Being a poppet type, the elements permit high-pressure, high flow rates, high speed and shockless shifting with low pressure drop.
Typical applications include steel mill machines, injection moulding machines, machine tools and so on. In addition, Yuken Logic Valves cavity specifications conform to ISO standards.

Features

- Multifunction performance in terms of direction, flow and pressure can be obtained by combining elements and covers.
- Poppet-type elements virtually eliminate internal leakage and hydraulic locking. Because there are no overlaps, response times are very high, permitting high-speed shifting.
- For high pressure, large capacity systems, optimum performance is achieved with low pressure losses.
- Since the logic valves are directly incorporated in cavities provided in blocks, the system is free from problems related to piping such as oil leakage, vibration and noise, and higher reliability is achieved.
- Multi-function logic valves permit compact integrated hydraulic systems which reduce manifold dimensions and mass and achieve lower cost conventional types.

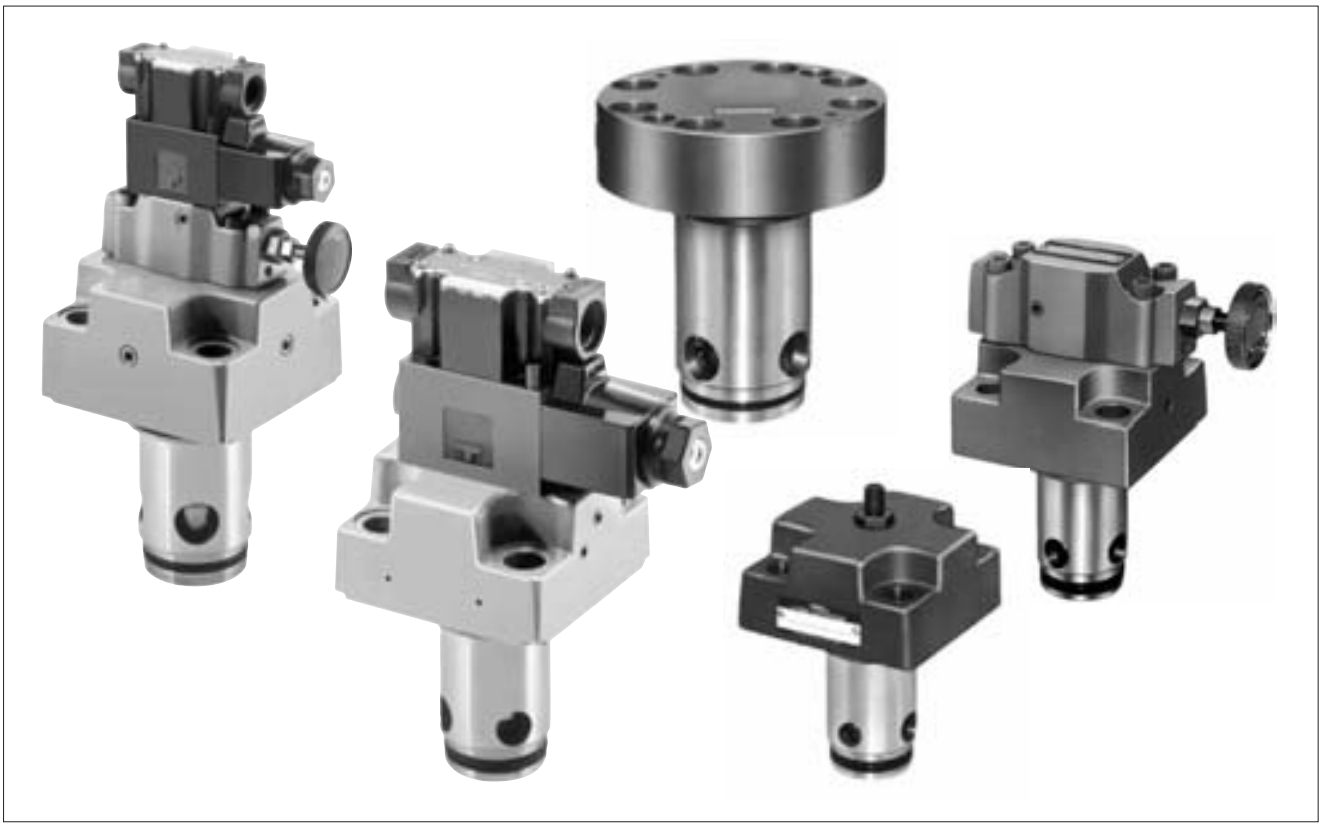

Structure and Functions

- As shown below, a logic valve consists of a cover, a sleeve, a poppet and a spring incorporated in a block. Although it is a simple two-port valve designed to open and close the poppet in accordance with the pressure signals from the pilot line, it serves as a multifunctional valve for controlling the direction, flow and pressure by controlling the pressure signals. Standard covers have several pressure signal ports (pilot ports) and control valves for control purposes are available. The covers are spigot mounted. There is no risk of oil leakage.

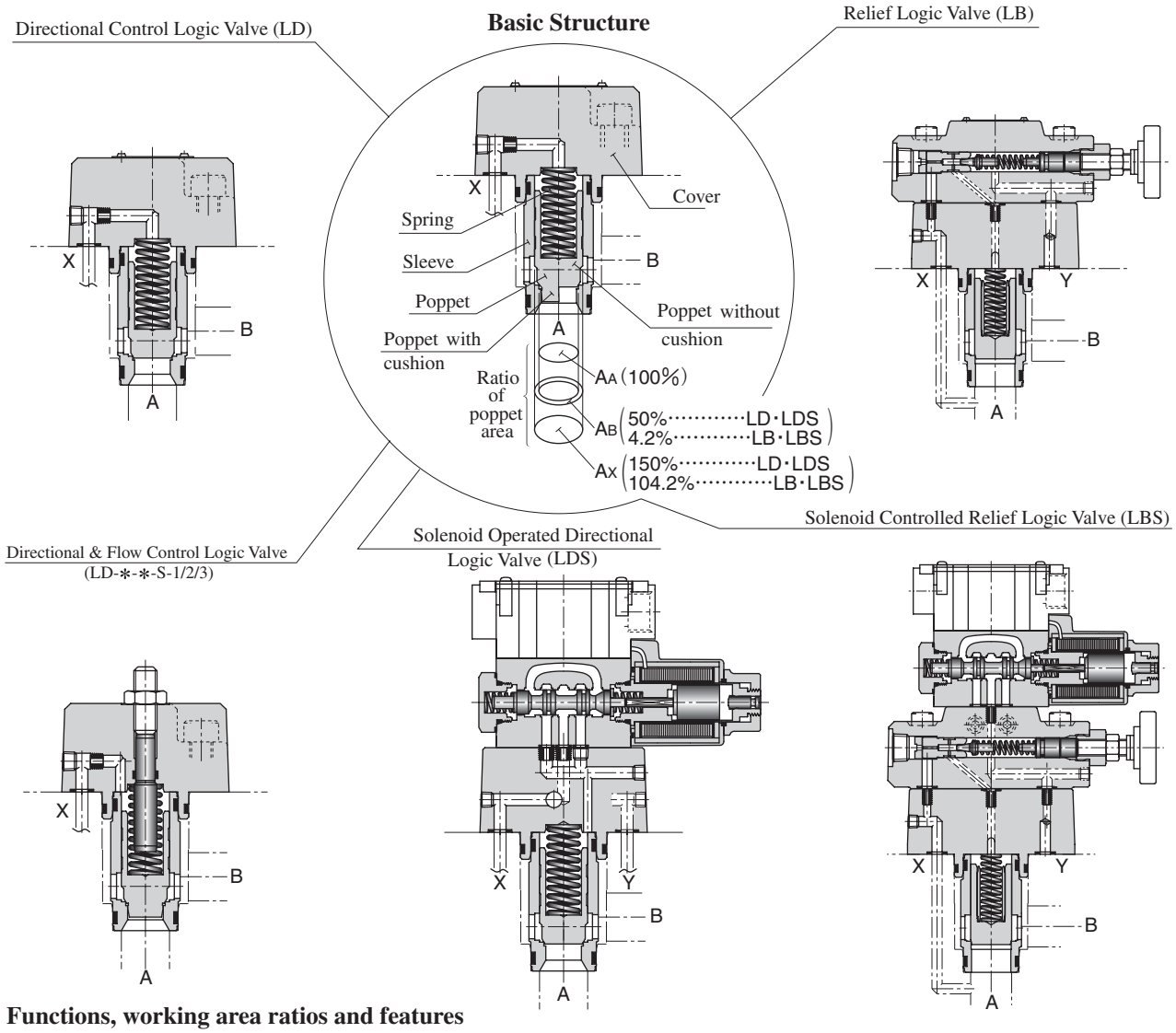

- **Functions, working area ratios and features**

Function	Graphic Symbols	Working area ratio (A_A : A_B)	Features
Direction	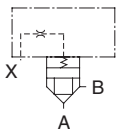	2 : 1	• Poppet shape Without cushion (LD/LDS-∗-∗): high-speed shift With cushion (LD/LDS-∗-∗-S): Shockless shift • No leakage between port A and B • Flow A to B and B to A are possible • Response time and shock can be adjusted by orifice selection.
Direction and Flow	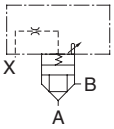		• Poppet shape With cushion (LD-∗-∗-S-1/2/3): flow control. • No leakage between port A and B • Flow A to B only is possible. • Response time and shock can be adjusted by orifice selection.
Relief	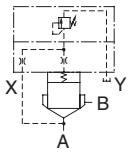	24 : 1	• Remote and unloading control is possible with vent circuit (LB-∗-∗). • Two or three pressure controls are possible in combination of solenoid operated directional valve and pilot relief valve (LBS-∗-∗).

Directional Control / Directional & Flow Control Logic Valves

These valves are 2-way directional valves designed to open and close the circuits in accordance with pressure signals from the pilot lines. They are used as multifunctional valves for controlling flow directions or flow directions and rates.
Standard covers provided with a choice of several control valves are available so that optimum valves can be selected for control purposes.

LD-32 LD-80

Specifications

Model No.	Rated Flow L/min (U.S.GPM)	Max. Operating Pressure MPa (PSI)	Cracking Pressure MPa (PSI)	Ratio of Poppet Area	Approx. Mass kg(lbs.)
LD-16	130 (34.3)	31.5 (4570)	Refer to Model No. Designation	2 : 1 (Annular area 50%)	1.6 (3.5)
LD-25	350 (92.5)				3.0 (6.6)
LD-32	500 (132)				5.3 (11.7)
LD-40	850 (225)				9.1 (20.1)
LD-50	1400 (370)				14.8 (32.6)
LD-63	2100 (555)				29.8 (65.7)
LD-80	3400 (898)				48 (106)
LD-100	5500 (1453)				86 (190)

Note: The rated flow is values with a pressure drop of 0.3 MPa (44 PSI) [fluid viscosity 35 mm²/s (164 SSU)].

Model Number Designation

LD - 32 - 05 - S - 1 - X 05 - 12

- Design number
  LD-16, 25, 32, 40, 50, 63...12
  LD-80, 100...11
- Designation of orifice
- Location of orifice (see the table right)
  - None: no orifice
  - X: Pilot port X
  - Z1: Pilot port Z_1
  - S: Port leading to spring
- Cover type (See the table right)
  None, 1, 2, 3, 4, 5
- Poppet shape ★
  - None: Without cushion
  - S: With cushion
- Cracking pressure (A→B)
  - None: No Spring
  - 05: 0.05 MPa (7 PSI)
  - 20: 0.2 MPa (29 PSI)
- Valve Size: 16, 25, 32, 40, 50, 63, 80, 100
- Directional control logic valves
  Directional & flow control logic valves

★ Poppet shapes

The type without a cushion and the type with a cushion are both suitable for high-speed shifting and shockless shifting respectively. For directional and flow control logic valves, be sure to specify "poppet with cushions".

List of Cover Types

Cover Type Designation		Graphic Symbols	Valve Size 16	25	32	40	50	63	80	100
Directional Control	Standard (None)	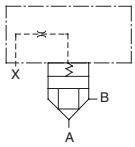	○	○	○	○	○	○	○	○
	With Check Valve (4)	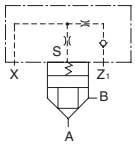	○	○	○	○	○	○	—	—
	With Shuttle Valve (5)	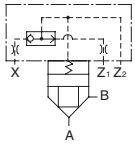	○	○	○	○	○	○	—	—
Directional & Flow Control	With Stroke Adjuster (1)	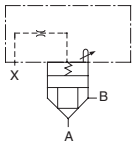	○	○	○	○	○	○	○	○
	With Check Valve & Stroke Adjuster (2)	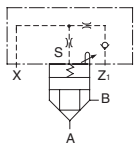	○	○	○	○	○	○	—	—
	With Shuttle Valve & Stroke Adjuster (3)	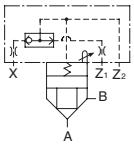	○	○	○	○	○	○	—	—

Solenoid Operated Directional Control Logic Valves

These solenoid operated directional control logic valves are composed of directional control valves and solenoid operated directional valves combined together. The solenoid operated directional valves serve to switch pilot lines and the directional control valves are used to control the direction of the main circuits. Covers provided with various control valves are available to provide optimum control.

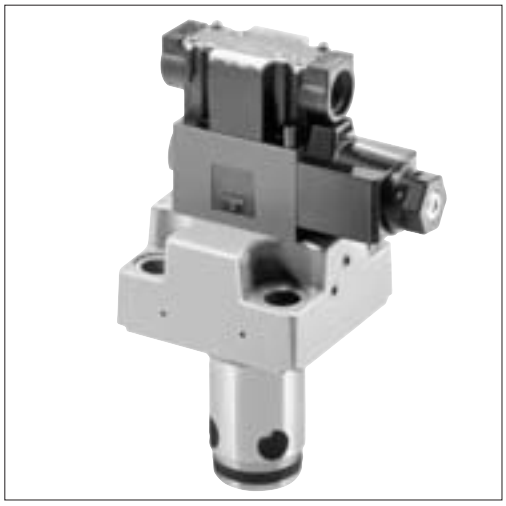

Specifications

Model No.	Rated Flow L/min (U.S.GPM)	Max. Operating Pressure MPa (PSI)	Cracking Pressure MPa (PSI)	Ratio of Poppet Area	Approx. Mass kg(lbs.)
LDS-25	350 (92.5)	31.5 (4570)	Refer to Model No. Designation	2 : 1 (Annular area 50%)	4.2 (9.3)
LDS-32	500 (132)				6.5 (14.3)
LDS-40	850 (225)				10.3 (22.7)
LDS-50	1400 (370)				18.6 (41.0)
LDS-63	2100 (555)				33.6 (74.1)

Note: The rated flow is values with a pressure drop of 0.3 MPa (44 PSI) [fluid viscosity 35mm²/s (164 SSU)].

Model Number Designation

LDS- 32 - 05 -S - 1 - O - X 05 - A100 - C - N - 14

- Design No.
  - LDS-25, 32, 40...14
  - LDS-50, 63.....13
- Type of electrical conduit connection
  - None: Terminal box
  - N: Plug-in connector
- Type of manual override
  - None: Manual override pin
  - C: Push button and lock nut (Option)
- Coil type
  - A∗: AC, R∗: AC→DC rectified
  - D∗: DC, RQ∗: AC→DC rectified ★ (quick return)
- Designation of orifice
- Location of orifice
  - None: No orifice
  - P: Pilot port P, B: Pilot port B
  - A: Pilot port A, X: Pilot port X
- Solenoid operated valve
  - None: With solenoid operated valve
  - O: Without solenoid operated valve
- Cover type (See the table right) 1, 2, 3, 4, 5, 6
- Poppet shape
  - None: Without cushion
  - S: With cushion
- Cracking pressure (A→B)
  - None: No spring
  - 05: 0.05 MPa (7 PSI)
  - 20: 0.2 MPa (29 PSI)
- Valve Size: 25, 32, 40, 50, 63
- Solenoid operated directional control logic valve

★ Applicable only for LDS-50, 63.

List of Cover Types

Cover Type Designation	Graphic Symbols	Valve Size 25	32	40	50	63
Normally Closed (1)	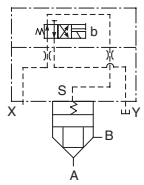	○	○	○	○	○
Normally Open (2)	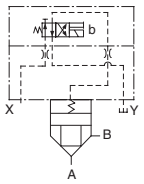	○	○	○	○	○
Normally Closed with Shuttle Valve (3)	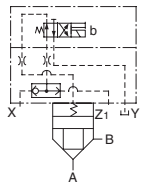	○	○	○	○	○
Normally Open with Shuttle Valve (4)	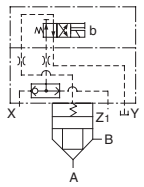	○	○	○	○	○
Normally Closed with Shuttle Valve (5)	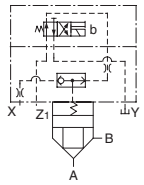	○	○	○	○	○
Normally Open with Shuttle Valve (6)	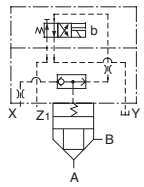	○	○	○	○	○

Note: In case of LDS-∗-∗-∗-∗-O (without solenoid operated valve), the graphic symbol for the solenoid operated valve is excluded.

Relief Logic Valves

These relief logic valves are used to protect pumps and control valves from excessive pressure and control the pressures of their hydraulic lines at constant levels.
With the help of vent lines, they are also capable of remote and unload control.

Specifications

Model Numbers	Max. Operating Pressure MPa (PSI)	Pres. Adj. Range MPa (PSI)	Max. Flow L/min (U.S.GPM)	Approx. Mass kg(lbs.)
LB-16-∗-∗-10	31.5 (4570)	0.4 - 31.5 (60 - 4570)	125 (33)	3.6 (7.9)
LB-25-∗-∗-10			250 (66)	4.5 (9.9)
LB-32-∗-∗-11			500 (132)	6.7 (14.8)
LB-50-∗-∗-11			1200 (317)	16.1 (35.5)

Model Number Designation

LB - 32 - V - Z1 - 11

- 11: Design number
  LB-16, 25...10
  LB-32, 50...11
- Z1: Cover type (See the table right)
  None, Z1, Z2
- V: Specify only for high-vent types ★
- 32: Valve size:
  16, 25, 32, 50
- LB: Relief logic valve

★ Use high-vent pressure types if the shifting time from unloading to on-loading is reduced.

List of Cover Types

Cover Type Designation	Graphic Symbols	Valve Size			
		16	25	32	50
Standard (None)	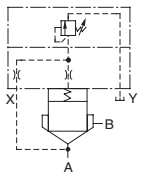	○	○	○	○
Vent controlled (Z1)	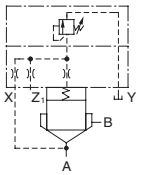	○	○	○	○
Vent controlled (Z2)	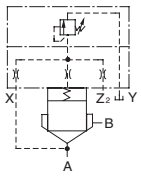	○	○	○	○

Solenoid Controlled Relief Logic Valves

These solenoid controlled relief logic valves are composite control valves having solenoid controlled directional and pilot relief valves and vent restrictors combined together.
This configuration eliminates pipes from the vent circits of relief logic valves. They are used to put pumps into unloading operation, with the solenoid controlled directional valves serving to select pilot lines, or to place hydraulic system two or three pressure controls, with the pilot relief valves in action.

Specifications

Model Numbers	Max. Operating Pressure MPa (PSI)	Pres. Adj. Range MPa (PSI)	Max. Flow L/min (U.S.GPM)	Approx. Mass kg(lbs.)	
				LBS-∗-0	LBS-∗-1/2
LBS-16-∗-∗-∗-14	31.5 (4570)	0.4 - 31.5 (60 - 4570)	125 (33)	7.2 (15.9)	8.6 (19.0)
LBS-25-∗-∗-∗-14			250 (66)	8.1 (17.9)	9.5 (20.9)
LBS-32-∗-∗-∗-14			500 (132)	10.3 (22.7)	11.7 (25.8)
LBS-50-∗-∗-∗-14			1200 (317)	19.7 (43.4)	21.1 (46.5)

Model Number Designation

LBS - 32 - V - 1 - A100 - C - N - 14

- 14: Design number
- N: Type of electrical conduit connection
  - None: Terminal box
  - N: Plug-in connector
- C: Type of manual override
  - None: Manual override pin
  - C: Push button and lock nut (Option)
- A100: Coil type
  - A∗: AC
  - D∗: DC
  - R∗: AC→DC rectified
- 1: Cover type (See the following page)
  - 0: No solenoid operated valve
  - 1: Normally closed, for unloading (Solenoid operated valve spool type: 2B3A)
  - 2: Normally open, for unloading (Solenoid operated valve spool type: 2B3B)
  - 3: Normally closed, with vent restrictor (Solenoid operated valve spool type: 2B3A)
  - 4: Normally open, with vent restrictor (Solenoid operated valve spool type: 2B3B)
  - 5: Two-pressure control (Solenoid operated valve spool type: 2B2)
  - 6: Three-pressure control (Solenoid operated valve spool type: 3C9)
  - 7: Two-pressure control and unloading (Solenoid operated valve spool type: 3C3)
- V: Specify only for high-vent types★
- 32: Valve size: 16, 25, 32, 50
- LBS: Solenoid controlled relief logic valve

★ Use high-vent pressure types if the shifting time from unloading to on-loading is reduced.

List of Cover Type

Cover Type Designation	Graphic Symbols	Valve Size			
		16	25	32	50
Without Solenoid Valve (0)	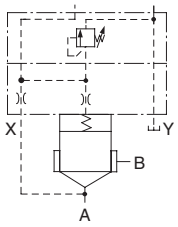	○	○	○	○
Normally Closed for Unloading (1)	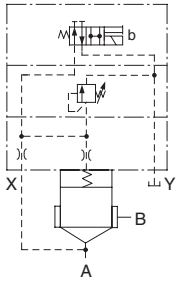	○	○	○	○
Normally Open for Unloading (2)	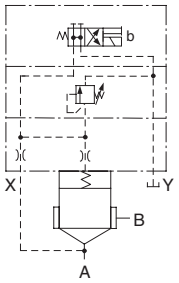	○	○	○	○
Normally Closed with Vent Restrictor (3)	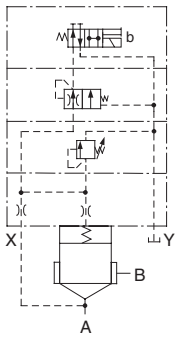	○	○	○	○
Normally Open with Vent Restrictor (4)	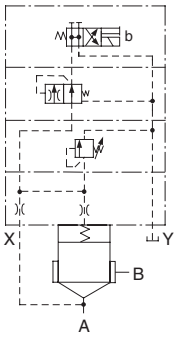	○	○	○	○

Cover Type Designation	Graphic Symbols	Valve Size			
		16	25	32	50
Two Pressure Control (5)	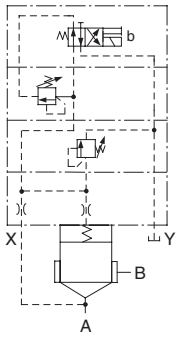	○	○	○	○
Three Pressure Control (6)	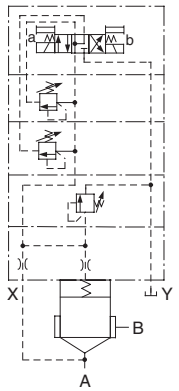	○	○	○	○
Two Pressure Control and Unloading (7)	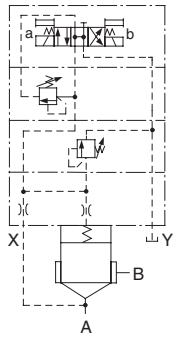	○	○	○	○

H

PROPORTIONAL ELECTRO-HYDRAULIC CONTOROLS

■ **EH Series-Hybrid Components** .....Page 656
Proportional Electro-Hydraulic Control Valves

■ **E Series** .....Page 667
Proportional Electro-Hydraulic Controls

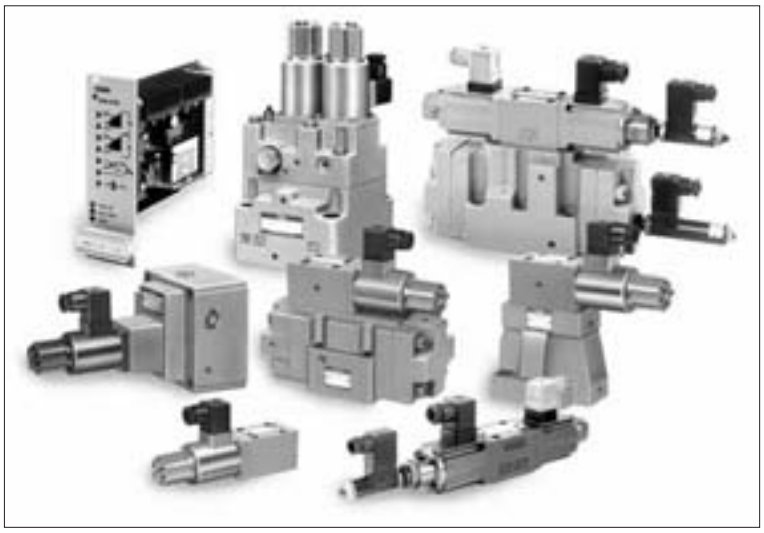

High-accuracy, simple, convenient
EH Series realizes your dreams.

Why simple ?

Highly accurate hydraulic control can be obtained only by supplying 24 V DC power ③★3 and inputting a command signal voltage of 0 to 5 V ④.★4

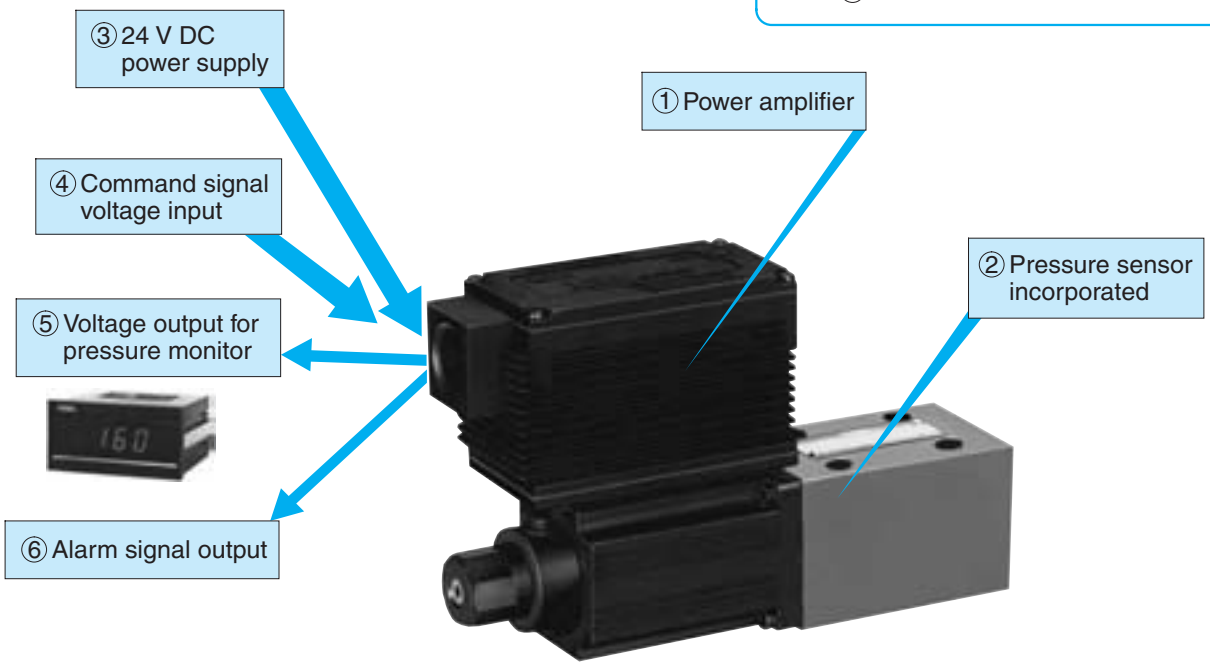

Details of Proportional Electro-hydraulic Relief Valve

Why high-accuracy ?

The power amplifier ① and pressure sensor ②★1 are integrated in the control valve.
Furthermore, the closed-loop control ★2 design greatly improves the linearity, hysteresis and stability in control pressure.

★1. The sensor in directional control valves is to monitor the spool position. Valves without sensor are also available in both pressure control valves and directional control valves.
★2. Open-loop types are also available.
★3. EHDFG-04 and 06: ±24V DC power supply is needed.
★4. EHDFG-01, 03, 04 and 06: 0 to ±5V DC command signal is needed.
★5. EHDFG-04 and 06: The spool displacement is shown as a percentage.

Why convenient ?

Analog voltages can be output by using the incorporated sensor for monitoring pressure, etc. ⑤★5.
Pressure can be displayed remotely with the indicators obtainable in the market and also can be transmitted into a computer.

If any trouble arises in the system and the command signal does not match to the output, the alarm signal ⑥ is dispatched.
The trouble, if arises, can be easily detected by monitoring the dispatch of the alarm signal with sequence controller or computer.

EH Series-Hybrid Components

Proportional Electro-Hydraulic Controls

Types	Graphic Symbols	Max. Operating Pressure MPa (PSI)	Maximum Flow (U.S.GPM / L/min)	Page
Pilot Relief Valves	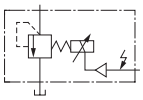	24.5 (3550)	EHDG 01	658
Pressure Control Valves	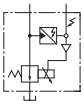	SB1110: 24.5(3550) SB1190: 7(1020)	SB1110 / SB1190	659
Relief Valves	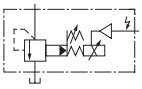	24.5 (3550)	EHBG 03 / 06 / 10	660
Relieving and Reducing Valves	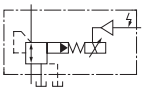	24.5 (3550)	EHRBG 06 / 10	661
Flow Control (and Check) Valves	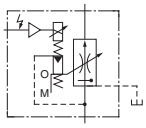	03: 20.6 (2990) 06: 24.5 (3550)	EHFG EHFCG 03 / 06	662
Flow Control and Relief Valves	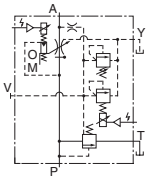	24.5 (3550)	EHFBG 03 / 06 / 10	663
High Flow Series Flow Control and Relief Valves	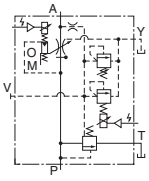	24.5 (3550)	EHFBG 03 / 06	664
Directional and Flow Control Valves	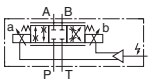	24.5 (3550)	EHDFG 01 / 03	665
High Respones Type Directional and Flow Control Valves	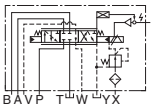	15.7 (2280)	EHDFG 04 / 06	666

Consult Yuken when detailed material such as dimensions figures is required.

Proportional Electro-Hydraulic Pilot Relief Valves

The valve can be used as a pilot valve of the Proportional Electro-Hydraulic Control Valves.
The valve can also be used as a relief valve for the hydraulic system where a small flow rate and continuous pressure control are required.

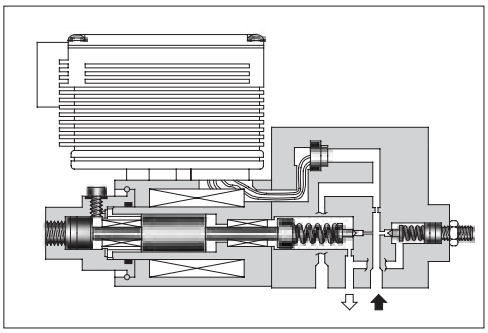

Specifications

Description \ Model Numbers	EHDG-01 ∗
Max. Operating Pres.	24.5 MPa (3550 PSI)
Max. Flow	2 L/min (.53 U.S.GPM)
Min. Flow	0.3 L/min (.08 U.S.GPM)
Pressure Adjustment Range	Refer to Model Number Designation
Coil Resistance	10 Ω
Hysteresis	3% (1%)★1 or less
Repeatability	1%★2 or less
Frequency Response	B: 10 (27) Hz★1 C: 10 (27) Hz★1 (-90 degree) H: 12 (27) Hz★1
Supply Electric Power	24 V DC (21 to 28 V DC Included Ripple)
Power Input (Max.)	28 W
Input Signal	B: 6.9 MPa (1000 PSI) / 5 V DC C: 15.7 MPa (2275 PSI) / 5 V DC H: 24.5 MPa (3550 PSI) / 5 V DC
Input Impedance	10 k Ω
Alarm Signal Output (Open Collector)	Voltage: Max. 30 V DC Current: Max. 40 mA
Pressure Signal Output	B: 5 V DC / 6.9 MPa (1000 PSI) C: 5 V DC / 15.7 MPa (2275 PSI) H: 5 V DC / 24.5 MPa (3550 PSI)
Ambient Temperature	0 - 50°C (32 - 122°F) (With Circulated Air)

★1. The value in ( ) is for the closed-loop type.
★2. The repeatability of the valve is obtained by having it tested independently on the conditions similar to its original testing.

Graphic Symbols

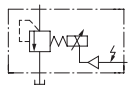
Open-Loop Type

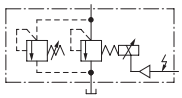
Open-Loop Type with Safety Valve

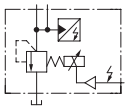
Open-Loop Type with Sensor

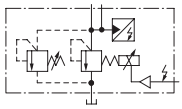
Open-Loop Type with Safety Valve & Sensor

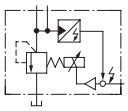
Closed-Loop Type

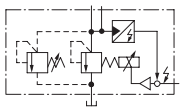
Closed-Loop Type with Safety Valve

Model Number Designation

F-	EHD	G	-01	V	-B	-S	-1	-PN	T15	M10	-50
Special Seals	Series Number	Type of Mounting	Valve Size	Applicable Control	Pres. Adj. Range MPa (PSI)	Control Type	Safety Valve	P-Line Orifice	T-Line Orifice	P-B Line Orifice	Design Number
F: Special Seals for Phosphate Ester Type Fluid (Omit if not required)	**EHD**: Proportional Electro-Hydraulic Pilot Relief Valve	**G**: Sub-plate Mounting	**01**	**None**: For general use **V**: Vent Control of Relief Valve (Omit if not required)	**B**: 0.5 - 6.9 (70 - 1000) **C**: 1 - 15.7 (145 - 2275) **H**: 1.2 - 24.5 (175 - 3550)	**None**: Open-Loop **S**: Open-Loop with Sensor **L**: Closed-Loop★1	**None**: Without Safety Valve **1**: With Safety Valve	**PN**: Without Orifice (Standard)	**T15** **T13** **T11** ★2	— **M10**: Standard Orifice	**50**

★1. For closed-loop models, specify applicable control code "V" even though the valve may not be used as vent control of relief valve.
★2. Standard of T-line Orifice.
Pres. Adj. Range B:T15, C:T13, H:T11.

Proportional Electro-Hydraulic Pressure Control Valves

These are closed-loop type pressure control valves controlling the system pressure from low to high in proportion to the input voltage. The stable pressure control is possible even in a small flow rate.

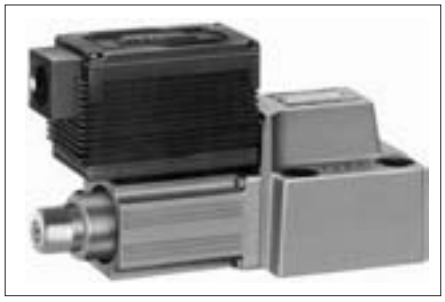

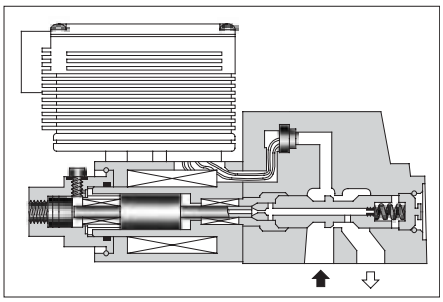

Specifications

Model Numbers / Description	SB1110	SB1190
Max. Operating Pres.	B: 6.9 MPa (1000 PSI) H: 24.5MPa (3550 PSI)	7.0MPa (1020 PSI)
Max. Flow	30 L /min (7.93 U.S.GPM)	70 L /min (18.49 U.S.GPM)
Min. Flow	B: 0.5 L/min (.13 U.S.GPM) H: 0.5 L/min (.13 U.S.GPM) at 0.2 - 6.9 MPa (29 - 1000 PSI) 1.5 L/min (.40 U.S.GPM) at 6.9 - 15.7 MPa (1000 - 2275 PSI) 3.0 L/min (.79 U.S.GPM) at 15.7 - 24.5 MPa (2275 - 3550 PSI)	1 L /min (.26 U.S.GPM)
Pressure Adjustment Range	Refer to Model Number Designation	
Coil Resistance	10 Ω	
Hysteresis	1 % or less	1.5 % or less
Repeatability	1 %★1 or less	
Supply Electric Power	24 V DC (21 to 28 V DC Included Ripple)	
Power Input (Max.)	28 W	
Input Signal	B: 6.9 MPa (1000 PSI) / 5 V DC H: 24.5 MPa (3550 PSI) / 5 V DC	7.0 MPa (1020 PSI) / 5 V DC
Input Impedance	10 kΩ	
Alarm Signal Output (Open Collector)	Voltage: Max. 30 V DC Current: Max. 40 mA	
Pressure Signal Output	B: 5 V DC / 6.9 MPa (1000 PSI) H: 5 V DC / 24.5 MPa (3550 PSI)	5 V DC / 7.0 MPa (1020 PSI)
Ambient Temperature	0 - 50˚C (32 - 122˚F) (With Circulated Air)	

★1. The repeatability of the valve is obtained by having it tested independently on the conditions similar to its original testing.

Graphic Symbol

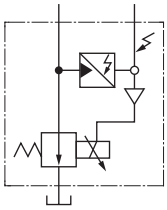

Model Number Designation

F-	SB1110	-B	-20
Special Seals	Series Number	Pres. Adj. Range MPa (PSI)	Design Number
F: Special Seals for Phosphate Ester Type Fluid (Omit if not required)	**SB1110**: Proportional Electro-Hydraulic Pressure Control Valve (3/8, Sub-plate mounting)	**B**: 0.2★- 6.9 (29 - 1000) **H**: 0.2★ - 24.5 (29 - 3550)	**20**
	SB1190: Proportional Electro-Hydraulic Pressure Control Valve (3/4, Sub-plate mounting)	**B**: 0.2★ - 7.0 (29 - 1020)	**10**

★ The minimum adjustable pressure is the value obtained at maximum flow rate.

Proportional Electro-Hydraulic Relief Valves

These valves, consist of a small size but high performance EH series electro-hydraulic proportional pilot relief valve and a low noise type relief valve. The valves control the system pressure proportionally through a controlled input voltage.

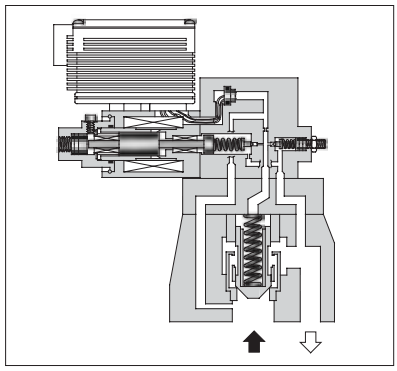

Specifications

Description \ Model Numbers	EHBG-03	EHBG-06	EHBG-10
Max. Operating Pres.	24.5 MPa (3550 PSI)		
Max. Flow	100 L/min (26.4 U.S.GPM)	200 L/min (52.8 U.S.GPM)	400 L/min (106 U.S.GPM)
Min. Flow	3 L/min (.79 U.S.GPM)	3 L/min (.79 U.S.GPM)	3 L/min (.79 U.S.GPM)
Pressure Adjustment Range	Refer to Model Number Designation		
Coil Resistance	10 Ω		
Hysteresis	2% (1%)★1 or less		
Repeatability	1% ★2 or less		
Frequency Response	C: 10 (22) Hz ★1 H: 10 (25) Hz ★1 (-90 degree)	C: 11 (22) Hz ★1 H: 13 (24.5) Hz ★1 (-90 degree)	C: 7 (10.5) Hz ★1 H: 6 (14) Hz ★1 (-90 degree)
Supply Electric Power	24 V DC (21 to 28 V DC Included Ripple)		
Power Input (Max.)	28 W		
Input Signal	C: 15.7 MPa (2275 PSI) / 5 V DC H: 24.5 MPa (3550 PSI) / 5 V DC (At Max. Flow)		
Input Impedance	10 kΩ		
Alarm Signal Output (Open Collector)	Voltage: Max. 30 V DC Current: Max. 40 mA		
Pressure Signal Output	C: 5 V DC / 15.7 MPa (2275 PSI) H: 5 V DC / 24.5 MPa (3550 PSI)		
Ambient Temperature	0 - 50˚C (32 - 122˚F) (With Circulated Air)		

★1. The value in ( ) is for the closed-loop type.
★2. The repeatability of the valve is obtained by having it tested independently on the conditions similar to its original testing.

Graphic Symbols

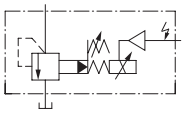

Open-Loop Type

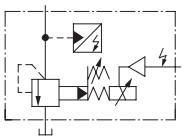

Open-Loop Type with Sensor

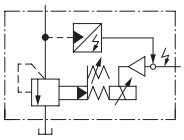

Closed-Loop Type

Model Number Designation

F-	EHB	G	-03	-C	-S	-50
Special Seals	Series Number	Type of Mounting	Valve Size	Pres. Adj. Range MPa (PSI)	Control Type	Design Number
F: Special Seals for Phosphate Ester Type Fluid (Omit if not required)	**EHB**: Proportional Electro-Hydraulic Relief Valve	**G**: Sub-plate Mounting	**03**	**C**: 0.6 [0.8]★- 15.7 (85 [115]★- 2275) **H**: 0.6 [0.8]★- 24.5 (85 [115]★- 3550)	**None**: Open-Loop **S**: Open-Loop with Sensor **L**: Closed-Loop	**50**
			06	**C**: 0.9 [1.0]★- 15.7 (130 [145]★- 2275) **H**: 0.9 [1.0]★- 24.5 (130 [145]★- 3550)		**50**
			10	**C**: 1.1 [1.4]★- 15.7 (160 [205]★- 2275) **H**: 1.1 [1.4]★- 24.5 (160 [205]★- 3550)		**50**

★Each value of minimum adjustment pressure is of at 50% flow rate of the Max. Flow shown on the Specifications.
The value in [ ] is for the closed-loop type.

Proportional Electro-Hydraulic Relieving and Reducing Valves

These valves consist of a small size but high performance electro-hydraulic proportional pilot relief valve and reducing valve with relief function. The valves control the system pressure proportionally through a controlled input voltage.
Moreover, a good response speed in reducing the pressure even at a large load capacity can be obtained with the relief function of the valves.

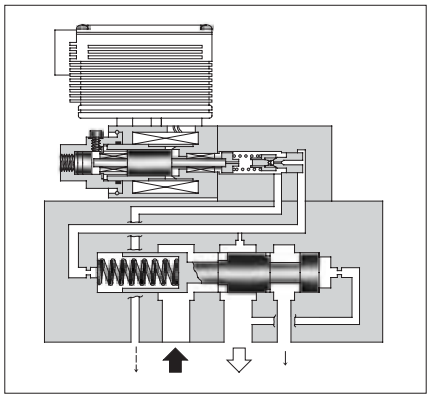

Specifications

Description \ Model Numbers	EHRBG-06	EHRBG-10
Max. Operating Pres.	24.5 MPa (3550 PSI)	
Max. Flow	100 L/min (26.4 U.S.GPM)	250 L/min (66 U.S.GPM)
Max. Relieving Flow	35 L/min ★1 (9.24 U.S.GPM)	15 L/min ★1 (3.96 U.S.GPM)
Pressure Adjustment Range	Refer to Model Number Designation	
Coil Resistance	10 Ω	
Hysteresis	3% or less	
Repeatability	1% ★2 or less	
Frequency Response	B : 4 Hz C : 3 Hz (-90 degree) H : 3 Hz	
Supply Electric Power	24 V DC (21 to 28 V DC Included Ripple)	
Power Input (Max.)	28 W	
Input Signal	B : 6.9 MPa (1000 PSI) / 5 V DC C : 13.7 MPa (2000 PSI) / 5 V DC H : 20.6 MPa (3000 PSI) / 5 V DC (at Flow Rate Zero)	
Input Impedance	10 kΩ	
Pressure Signal Output	B : 5 V DC / 6.9 MPa (1000 PSI) C : 5 V DC / 13.7 MPa (2000 PSI) H : 5 V DC / 20.6 MPa (3000 PSI)	
Ambient Temperature	0 - 50°C (32 - 122°F) (With Circulated Air)	

★1. The figures shown are those obtained where the differential pressure between the secondary pressure port and tank port is 14 MPa (2030 PSI).
★2. The repeatability of the valve is obtained by having it tested independently on the conditions similar to its original testing.

Graphic Symbols

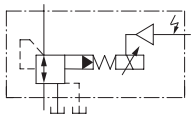

Open-Loop Type

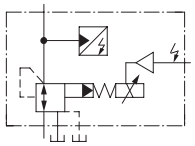

Open-Loop Type with Sensor

Model Number Designation

F-	EHRB	G	-06	-C	-S	-50
Special Seals	Series Number	Type of Mounting	Valve Size	Pres. Adj. Range MPa (PSI)	Control Type	Design Number
F: Special Seals for Phosphate Ester Type Fluid (Omit if not required)	**EHRB**: Proportional Electro-Hydraulic Relieving & Reducing Valve	**G**: Sub-plate Mounting	**06**	**B**: 0.8 - 6.9 (115 - 1000) **C**: 1.2 - 13.7 (175 - 2000) **H**: 1.5 - 20.6 (220 - 3000)	**None**: Open-Loop	**50**
			10	**B**: 0.9 - 6.9 (130 - 1000) **C**: 1.2 - 13.7 (175 - 2000) **H**: 1.5 - 20.6 (220 - 3000)	**S**: Open-Loop with Sensor	**50**

Proportional Electro-Hydraulic Flow Control (and Check) Valves

The system flow rate can be controlled remotely as desired by regulating input voltage. Further, since pressure and temperature compensation functions are provided, the preselected flow rate is not affected by pressure (load) or temperature (fluid viscosity).

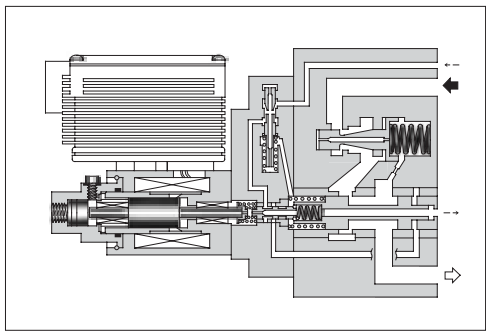

Specifications

Description \ Model Numbers		EHF∗G-03- 60 / 125	EHF∗G-06-250
Max. Operating Pres. MPa (PSI)		20.6 (3000)	24.5 (3550)
Max. Metred Flow L/min (U.S.GPM)		60: 60 (15.8) 125: 125 (33)	250 (66)
Min. Metred Flow L/min (U.S.GPM)		1 (.26)	2.5 (.66)
Min. Differential Pressure ★1 MPa (PSI)		1.0 (145)	1.0 (145)
Free Flow L/min (U.S.GPM) (Only with Check Valve)		130 (34.3)	280 (73.9)
Pilot Flow L/min (U.S.GPM)	at Normal	0.5 (.13)	1 (.26)
	at Transition	2.6 (.69)	4 (1.06)
Min. Pilot Pressure MPa (PSI)		1.0 (145)	1.5 (215)
Frequency Response		12 Hz (-90 degree)	
Hysteresis		3% or less	
Repeatability		1% ★2 or less	
Coil Resistance		10 Ω	
Supply Electric Power		24 V DC (21 to 28 V DC Included Ripple)	
Power Input (Max.)		28 W	
Input signal		Max. Metred Flow / 5V DC	
Input Impedance		10 kΩ	
Ambient Temperature		0 - 50˚C (32 - 122˚F) (With Circulated Air)	

★1. Minimum differential pressure means fine pressure compensation at inlet and outlet port.
★2. The repeatability of the valve is obtained by having it tested independently on the conditions similar to its original testing.

Graphic Symbols

● **EHFG**

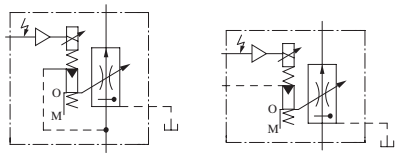

Internal Pilot External Pilot

● **EHFCG**

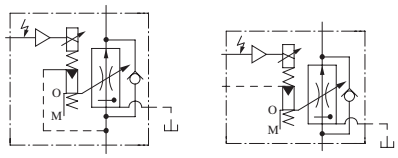

Internal Pilot External Pilot

Model Number Designation

F-	EHF	G	-03	-60	-E	-50
Special Seals	Series Number	Type of Mounting	Valve Size	Max. Metred Flow L/min (U.S.GPM)	Pilot Connection	Design Number
F: Special Seals for Phosphate Ester Type Fluid (Omit if not required)	**EHF**: Proportional Electro-Hydraulic Flow Control Valve **EHFC**: Proportional Electro-Hydraulic Flow Control and Check Valve	**G**: Sub-plate Mounting	**03**	**60**: 60 (15.8) **125**: 125 (33)	**None**: Internal Pilot **E**: External Pilot	**50**
			06	**250**: 250 (66)		**50**

Proportional Electro-Hydraulic Flow Control and Relief Valves

These are proportional electro-hydraulic flow control valves having functions for controlling the direct electric current of metre-in type and for pressure control.
They are energy-saving valves for supplying the minimum pressure and flow required to operate actuators.

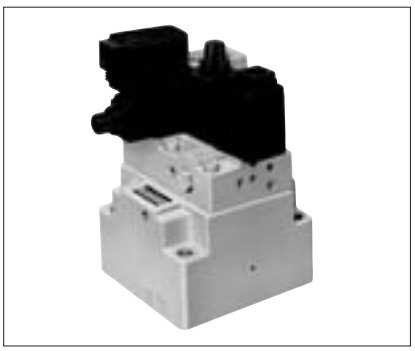

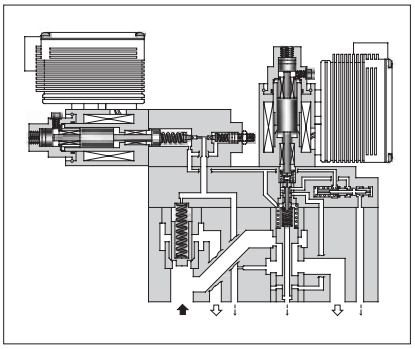

Specifications

Description \ Model Numbers		EHFBG-03-60/125	EHFBG-06-250	EHFBG-10-500
Max. Operating Pressure MPa (PSI)		24.5 (3550)	24.5 (3550)	24.5 (3550)
Max. Flow L/min (U.S.GPM)		60 : 60 (15.8) 125 : 125 (33)	250 (66)	500 (132)
Metred Flow Capacity L/min (U.S.GPM)		60 : 1-60(.26-15.8) 125: 1-125(.26-33)	2.5-250 (.66-66)	5-500 (1.32-132)
Min. Pilot Pressure MPa (PSI)		1.5 (215)	1.5 (215)	1.5 (215)
Pilot Flow L/min (U.S.GPM)	at Normal	1 (.26)	1 (.26)	1 (.26)
	at Transition	3 (.79)	4 (1.06)	6 (1.59)
Differential Pressure MPa (PSI)		0.6 (85)	0.7 (100)	0.9 (130)
Flow Controls	Hysteresis	3% or less		
	Repeatability	1%★ or less		
	Input Signal	Max. Flow / 5 V DC		
	Coil Resistance	10 Ω		
	Supply Electric Power	24 V DC (21 to 28 V DC Included Ripple)		
	Input Impedance	10 kΩ		
	Power Input (Max.)	28 W		
Pressure Controls	Pres. Adj. Range MPa (PSI) Adj. Range: C	1.2-15.7 (175-2275)	1.4-15.7 (200-2275)	1.5-15.7 (215-2275)
	Pres. Adj. Range MPa (PSI) Adj. Range: H	1.4-24.5 (200-3550)	1.4-24.5 (200-3550)	1.5-24.5 (215-3550)
	Hysteresis	2% or less		
	Repeatability	1%★ or less		
	Coil Resistance	10 Ω		
	Input Signal	Max. Operating Pres. / 5 V DC		
	Supply Electric Power	24 V DC (21 to 28 V DC Included Ripple)		
	Input Impedance	10 kΩ		
	Power Input (Max.)	28 W		
Output Signal		C : 5 V DC / 15.7 MPa (2275 PSI) H : 5 V DC / 24.5 MPa (3550 PSI)		
Ambient Temperature		0 - 50°C (32 - 122°F) (With Circulated Air)		

★The repeatability of the valves is obtained by having it tested independently on the conditions similar to its original testing.

Graphic Symbols

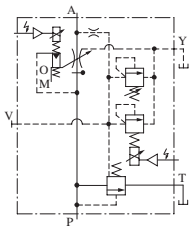

Models with Proportional Pilot Relief Valve

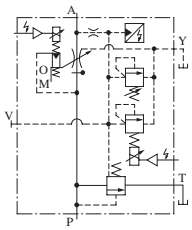

Models with Proportional Pilot Relief Valve and Sensor

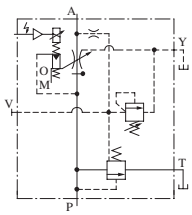

Models without Proportional Pilot Relief Valve

External Pilot Pres. Connection

Model Number Designation

F-	EHFB	G	-03	-60	-C	-E	-S	-50
Special Seals	Series Number	Type of Mounting	Valve Size	Max. Metred Flow L/min (U.S.GPM)	Pilot Relief Valve Pres. Adj. Range	Pilot Connection of Flow Control	Pressure Controls	Design Number
F: Special Seals for Phosphate Ester Type Fluid (Omit if not required)	**EHFB**: Proportional Electro-Hydraulic Flow Control and Relief Valve	**G**: Sub-plate Mounting	**03**	**60**: 60 (15.8) **125**: 125 (33)	**None**: Without Proportional Pilot Relief Valve **C, H**: See Specifications	**None**: Internal Pilot **E**: External Pilot	**None**: Open-Loop **S**: Open-Loop with Sensor	**50**
			06	**250**: 250 (66)				**50**
			10	**500**: 500 (132)				**50**

High Flow Series
Proportional Electro-Hydraulic Flow Control and Relief Valves

This flow control and relief valve is a energy-saving valve that supplies the minimum pressure and flow necessary for actuator drive.
For the High Flow Series, double maximum flow rate [03 size: 125 → 250 L/min (33 → 66 U.S.GPM), 06 size: 250 → 500 L/min (66 → 132 U.S.GPM)] enables a smaller valve size than conventional products; compact-sized devices can be provided.

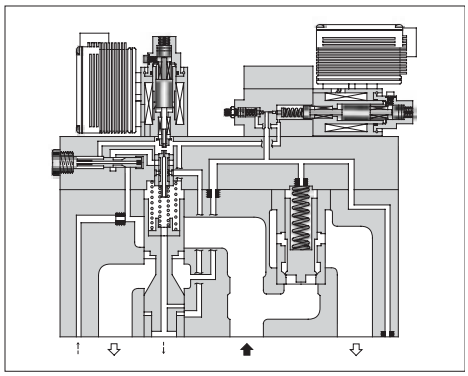

Specifications

Description \ Model Numbers			EHFBG-03-250	EHFBG-06-500
Max. Operating Pressure MPa (PSI)			24.5 (3550)	24.5 (3550)
Max. Flow L/min (U.S.GPM)			250 (66)	500 (132)
Metred Flow Capacity L/min (U.S.GPM)			2.5-250 (.66-66)	5-500 (1.32-132)
Min. Pilot Pressure MPa (PSI)			1.5 (215)	1.5 (215)
Pilot Flow L/min (U.S.GPM)		at Normal	1 (.26)	1 (.26)
		at Transition	4 (1.06)	6 (1.59)
Differential Pressure MPa (PSI)			0.8 (115)	0.9 (130)
Flow Controls	Hysteresis		3% or less	
	Repeatability		1%★ or less	
	Input Signal		Max. Flow / 5 V DC	
	Coil Resistance		10 Ω	
	Supply Electric Power		24 V DC (21 to 28 V DC Included Ripple)	
	Input Impedance		10 kΩ	
	Power Input (Max.)		28 W	
Pressure Controls	Pres. Adj. Range MPa (PSI)	Adj. Range: C	1.6-15.7 (230-2275)	1.5-15.7 (215-2275)
		Adj. Range: H	1.8-24.5 (260-3550)	1.5-24.5 (215-3550)
	Hysteresis		3% or less	
	Repeatability		1%★ or less	
	Coil Resistance		10 Ω	
	Input Signal		Max. Operating Pres. / 5 V DC	
	Supply Electric Power		24 V DC (21 to 28 V DC Included Ripple)	
	Input Impedance		10 kΩ	
	Power Input (Max.)		28 W	
Output Signal			C : 5 V DC / 15.7 MPa (2275 PSI) H : 5 V DC / 24.5 MPa (3550 PSI)	
Ambient Temperature			0 - 50°C (32 - 122°F) (With Circulated Air)	

★ The repeatability of the valves is obtained by having it tested independently on the conditions similar to its original testing.

Graphic Symbols

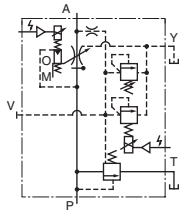

Models with Proportional Pilot Relief Valve

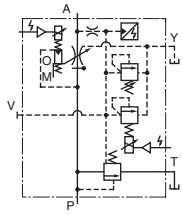

Models with Proportional Pilot Relief Valve and Sensor

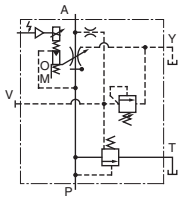

Models without Proportional Pilot Relief Valve

External Pilot Pres. Connection

Model Number Designation

F-	EHFB	G	-03	-250	-C	-E	-S	-50
Special Seals	Series Number	Type of Mounting	Valve Size	Max. Metred Flow L/min (U.S.GPM)	Pilot Relief Valve Pres. Adj. Range	Pilot Connection of Flow Control	Pressure Controls	Design Number
F: Special Seals for Phosphate Ester Type Fluid (Omit if not required)	**EHFB**: Proportional Electro-Hydraulic Flow Control and Relief Valve	**G**: Sub-plate Mounting	**03**	**250**: 125 (66)	**None**: Without Proportional Pilot Relief Valve **C, H** : See Specifications	**None**: Internal Pilot **E**: External Pilot	**None**: Open-Loop **S**: Open-Loop with Sensor	**50**
			06	**500**: 500 (132)				**50**

Proportional Electro-Hydraulic Directional and Flow Control Valves

These valves incorporate two control functions - flow and direction - which simplify the hydraulic circuit composition and therefore the cost of the system is reduced.

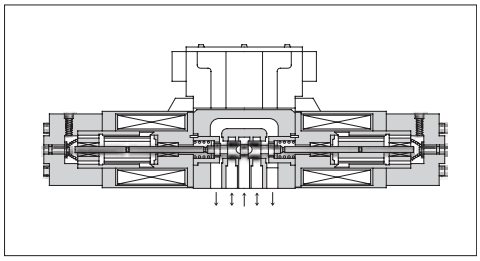

Specifications

Description \ Model Numbers		EHDFG-01	EHDFG-03
Max. Operating Pressure MPa (PSI)		24.5 (3550)	24.5 (3550)
Max. Tank Line Back Pres. MPa (PSI)		7 (1020)	7 (1020)
Rated Flow L/min (U.S.GPM) [Valve ⊿P 6.9 MPa (1000 PSI)]		30 (7.92)	60 (15.9)
Hysteresis		5% or less	
Repeatability		1%★ or less	
Frequency Response		20 Hz (-90 deg.)	17 Hz (-90 deg.)
Coil Resistance		10.5 Ω	8.0 Ω
Supply Electric Power		24 V DC (21 to 28 V DC Included Ripple)	
Input Voltage	By Controlling Variable Resistance (Using of Power from Amp.)	1 - 2 kΩ Volume Range	
	By Controlling Voltage (Using of Power outside Amp.)	0 - –5 V for SOL a 0 - +5 V for SOL b	
Input Impedance		10 kΩ	10 kΩ
Power Input (Max.)		40 W	45 W
Ambient Temperature		0 - 50˚C (32 - 122˚F) (With Circulated Air)	

★The repeatability of the valves is obtained by having it tested independently on the conditions similar to its original testing.

Graphic Symbols

● Metre-in • Metre-out Control

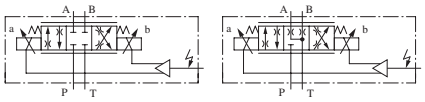

3C2 3C40

● Metre-out Control

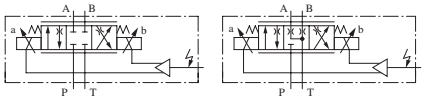

3C2 3C40

● Metre-in Control

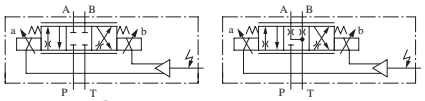

3C2 3C40

Model Number Designation

F-	EHDF	G	-01	-30	-3C2	-E	-30
Special Seals	Series Number	Type of Mounting	Valve Size	Rated Flow L/min (U.S.GPM)	Spool Type★	Direction of Flow	Design Number
F: Special Seals for Phosphate Ester Type Fluid (Omit if not required)	**EHDF**: Proportional Electro-Hydraulic Directional and Flow Control Valve	**G**: Sub-plate Mounting	**01**	**30**: 30 (7.92)	**3C2**	**XY** : Metre-in · Metre-out **X** : Metre-in **Y** : Metre-out	**30**
			03	**60**: 60 (15.9)	**3C40**		**30**

★Spool type shown in the column is for the centre position.

High Response Type Proportional Electro-Hydraulic Directional and Flow Control Valves

These valves pursue the ultimate performance of proportional electro-hydraulic directional & flow control valves and make themselves to have high response features.
The closed-loop is composed in the valve inside by combination of a differential transformer (LVDT) and a power amplifier. Thus, high accuracy and reliability are provided.
In addition to control in the open-loop, these can be used for the closed-loop system as simplified servo valves.

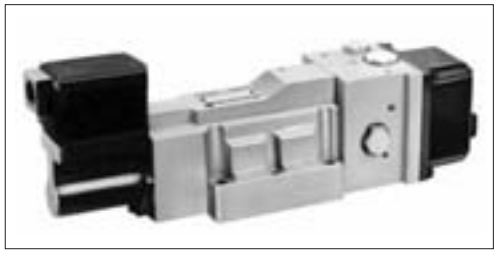

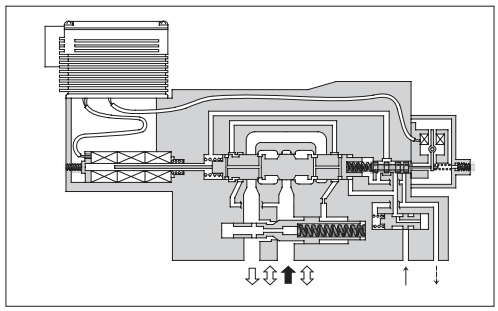

Specifications

Description \ Model Numbers		EHDFG-04	EHDFG-06
Max. Operating Pres. MPa (PSI)		15.7 (2280)	15.7 (2280)
Rated Flow L/min (U.S.GPM) Valve Pres. Difference: 1.5 MPa (215 PSI)		130 (34.3)	280 (73.9)
Min. Required Pilot Pres. MPa (PSI)		1.5 (215)	1.5 (215)
Min. Required Pilot Flow L/min (U.S.GPM)	at Normal	2 (.53)	2 (.53)
	at Transition	6 (1.59)	10 (2.64)
Max. Drain Line Back Pres. MPa (PSI)		0.1 (15)	0.1 (15)
Hysteresis		1% or less	
Repeatability		1%★ or less	
Frequency Response		55 Hz (-90 deg.)	45 Hz (-90 deg.)
Coil Resistance		30 Ω	30 Ω
Supply Electric Power		±24 V DC (±21 to ±28 V DC Included Ripple)	
Input Signal		Rated Flow / ±5 V DC	
Input Impedance		10 kΩ	10 kΩ
Power Input (Max.)		20 W	20 W
Alarm Signal Output (Open Collector)		Voltage: Max. 30 V DC Current: Max. 30 mA	
LVDT Output (Sensor Monitor)		±5 V DC / Rated Travel of Spool	
Ambient Temperature		0 - 50°C (32 - 122°F) (With Circulated Air)	

★The repeatability of the valves is obtained by having it tested independently on the conditions similar to its original testing.

Graphic Symbols

● Models without Pressure Compensator Valve

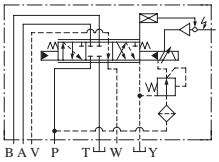

Internal Pilot

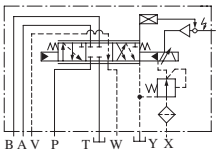

External Pilot

● Models with Pressure Compensator Valve

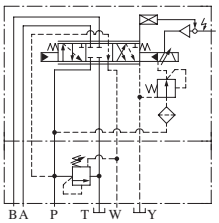

Internal Pilot

Model Number Designation

F-	EHDF	G	-04	-130	-2	-E	-CB	-10
Special Seals	Series Number	Type of Mounting	Valve Size	Rated Flow L/min (U.S.GPM)	Spool Type★	Pilot Connection	Relief Type Pres. Compensator	Design Number
F: Special Seals for Phosphate Ester Type Fluid (Omit if not required)	**EHDF**: Proportional Electro-Hydraulic Directional and Flow Control Valve	**G**: Sub-plate Mounting	**04**	**130**: 130 (34.3)	**2**	**None**: Internal Pilot	**None**: Not Provided	**10**
			06	**280**: 280 (73.9)	**40**	**E**: External Pilot	**CB**: Provided	**10**

★ Spool type shown in the column is for the centre position.

E Series Proportional Electro-Hydraulic Controls

Types	Graphic Symbols	Max. Operating Pressure MPa (PSI)	Maximum Flow (U.S.GPM / L/min)	Page
Pilot Relief Valves		24.5 (3550)	EDG 01	670
Relief Valves	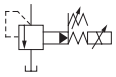	24.5 (3550)	EBG 03 06 10	676
Relieving and Reducing Valves	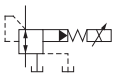	24.5 (3550)	ERBG 06 10	685
40 Ω Series Flow Control (and Check) Valves	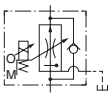	20.6 (3000)	EFG EFCG 02 03 06 10	695
10 Ω Series Flow Control (and Check) Valves	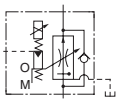	03: 20.6 (3000) 06: 24.5 (3550)	EFG EFCG 03 06	705
40 Ω - 10 Ω Series Flow Control and Relief Valves	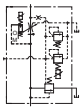	24.5 (3550)	EFBG 03 06 10	712
10 Ω - 10 Ω Series Flow Control and Relief Valves	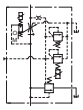	24.5 (3550)	EFBG 03 06 10	722
High Flow Series Flow Control and Relief Valves	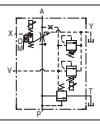	24.5 (3550)	EFBG 03 06 10	733
Shockless Type Directional and Flow Control Valves	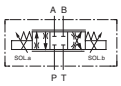	25 (3630)	EDFG 01	743
Directional and Flow Control Valves	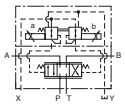	25 (3630)	EDFHG 03 04 06	746
High Respones Type Directional and Flow Control Valves	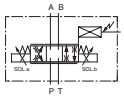	01/03: 31.5 (4570) 04/06: 35 (5080)	ELDFG 01 03 ELDFHG 04 06	753

Power Amplifiers ..... Page 766

Setting Adjusters ..... Page 789

Hydraulic Fluids

Fluid Types

Any type of hydraulic fluid listed in the table below can be used.

Petroleum Base Oils	Use fluids equivalent to ISO VG 32 or VG 46.
Synthetic Fluids	Use phosphate ester or polyol ester fluids. When phosphate ester fluid is used, prefix "F-" to the model number because the special seals (fluororubber) are required to be used.
Water-containing Fluids	Use water-glycol fluid.

Note: For use with hydraulic fluids other than those listed above, please consult your Yuken representatives in advance.

Recommended Fluid Viscosity and Temperature

Use hydraulic fluids which satisfy the both recommended viscosity and oil temperatures given in the table below.

Name	Viscosity	Temperature
Pilot Relief Valves Relief Valves Reducing and Relieving Valves	15 - 400 mm^2/s (77 - 1800 SSU)	-15 - +70˚C (5 - 160˚F)
Flow Control Valves Flow Control and Check Valves Flow Control and Relief Valves	20 - 200 mm^2/s (98 - 900 SSU)	
Directional and Flow Control Valves	20 - 400 mm^2/s (98 - 1800 SSU)	0 - +60˚C (32 - 140˚F)
Shockless Type Directional and Flow Control Valves High Respones Type Directional and Flow Control Valves (Direct Type)	20 - 200 mm^2/s (98 - 900 SSU)	0 - +60˚C (32 - 140˚F)
High Respones Type Directional and Flow Control Valves (Two Stage Type)	15 - 400 mm^2/s (77 - 1800 SSU)	-15 - +60˚C (5 - 140˚F)

Control of Contamination

Due caution must be paid to maintaining control over contamination of the hydraulic fluids which may otherwise lead to breakdowns and shorten the life of the valve. Please maintain the degree of contamination within NAS 1638-Grade 11. Use 20 µm or finer line filter.

Instructions

Mounting

Be sure that the air vent faces up.
In addition, if the valve is mounted vertically, the minimum adjustment pressure is 0.2 MPa (29 PSI) or higher.

[Good example]

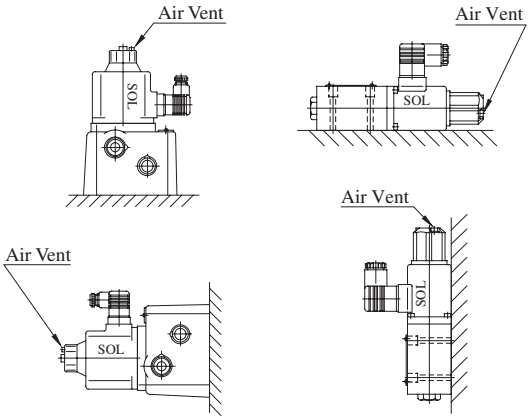

[Bad example]

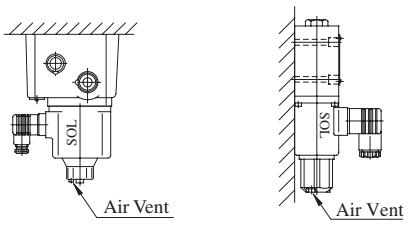

Air Bleeding

To ensure stable control, bleed the air from solenoid completely and fill its core with oil.
Bleeding can be done by slowly loosening one of the air vents at the end of the solenoid. Choose one of the three air vents which is expected to work most effectively (see the figure to the right).

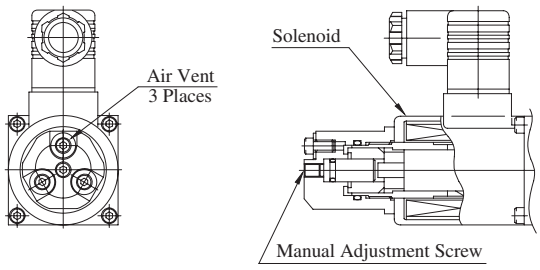

10 Ω Series Solenoid

Manual Adjustment Screw

When initial adjustments are to be made or when no current is supplied to the valve due to electrical failure or other problem, turn the manual adjustment screw to temporatily set the valve pressure / flow rate. In that case, when turn the manual adjustment screw clockwise, the valve pressure / flow rate increases. Under normal condition, however, this screw must be kept in its original position (see the figure to the right).

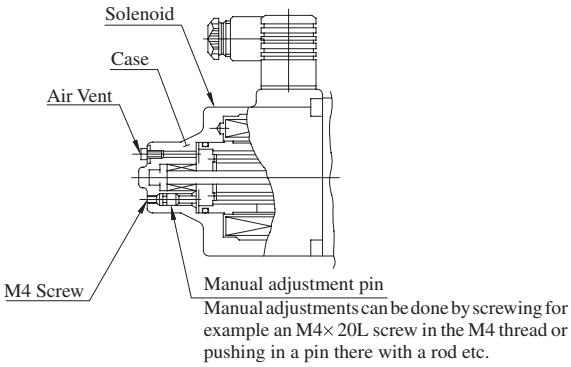

40 Ω Series Solenoid

Tank and Drain Piping

The tank-line back pressure and drain back pressure directly affect the minimum adjustment pressure. Therefore, do not connect the tank or drain pipes to other lines, but connect them directly to the reservoir maintaining the back pressure as low as possible. Be sure that the tank and drain pipe ends are immersed in fluid.

Hysteresis and Repeatability Value Indications

The hysteresis and repeatability values indicated in the specifications for each control valve are determined under the following conditions:

- Hysteresis Value: Obtained when Yuken's applicable power amplifier is used.
- Repeatability Value: Obtained when Yuken's applicable power amplifier is used under the same conditions.

Proportional Electro-Hydraulic Pilot Relief Valves

This valve consists of a small DC solenoid and a direct-acting relief valve. It serves as a pilot valve for a low flow rate hydraulic system or a proportional electro-hydraulic control valve and controls the pressure in proportion to the input current. Note that this valve is used in conjunction with the applicable power amplifier.

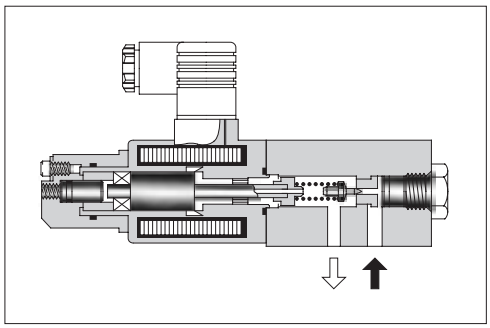

Specifications

Description \ Model Numbers	EDG-01
Max. Operating Pres.	24.5 MPa (3550 PSI)
Max. Flow	2 L/min (.53 U.S.GPM)
Min. Flow	0.3 L/min (.08 U.S.GPM)
Pressure Adj. Range MPa (PSI)	Refer to Model Number Designation
Rated Current	EDG-01∗-B: 800 mA EDG-01∗-C: 900 mA EDG-01∗-H: 950 mA
Coil Resistance	10 Ω
Hysteresis	3% or less
Repeatability	1% or less
Approx. Mass	2 kg (4.4 lbs.)

Graphic Symbols

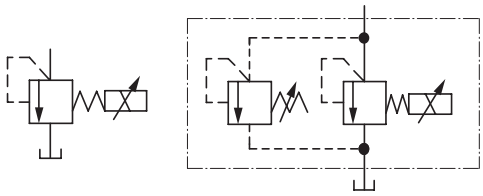

Without Safety Valve With Safety Valve

Model Number Designation

F-	ED	G	-01	V	-C	-1	-PN	T13	-51	∗
Special Seals	Series Number	Type of Mounting	Valve Size	Applicable Control ★1	Pressure Adj. Range MPa (PSI)	Safety Valve	P-Line Orifice	T-Line★2 Orifice	Design Number	Design Standards
F: Special Seals for Phosphate Ester Type Fluid (Omit if not required)	**ED**: Proportional Electro-Hydraulic Pilot Relief Valve	**G**: Sub-plate Mounting	**01**	**None**: General use **V**: Vent Control of Relief Valve (Omit if not required)	**B**: 0.5 - 6.9 (70 - 1000) **C**: 1.0 - 15.7 (145 - 2275) **H**: 1.2 - 24.5 (175 - 3550)	**None**: Without Safety Valve **1**: With Safety Valve	**PN**: Without Orifice (Standard)	**T15** **T13** **T11**	**51**	Refer to ★3

★1. When the valve is to be used for vent control purpose, orifice adjustment is required due to piping capacity limitations. Therefore, consult your Yuken representative in advance.
★2. The orifice used as the pilot valve may differ from the standard orifice.
★3. Design Standards: None ..... Japanese Standard "JIS" and European Design Standard
90 ..... N. American Design Standard

Attachment

Mounting Bolts

Four socket head cap screws in the table below are included.

Descriptions	Soc. Hd. Cap Screw
Japanese Standard "JIS" European Design Standard	M5 × 45 Lg.
N. American Design Standard	No. 10 - 24 UNC × 1-3/4 Lg.

Applicable Power Amplifier

For stable performance, it is recommended that Yuken's applicable power amplifiers be used (for details see page 767, 771, 780).

Model Numbers : AME-D-10-∗-20
AME-D2-1010-11
SK1022-∗-∗-11
SK1015-11 (For DC power supply)
AMN-D-10 (For DC power supply)

Sub-plate

Piping Size	Japanese Standard "JIS"		European Design Standard		N. American Design Standard		Approx. Mass kg (lbs.)
	Sub-plate Model Numbers	Thread Size	Sub-plate Model Numbers	Thread Size	Sub-plate Model Numbers	Thread Size	
1/8	DSGM-01-31	Rc 1/8	DSGM-01-3180	1/8 BSP.F	DSGM-01-3190	1/8 NPT	0.8 (1.8)
1/4	DSGM-01X-31	Rc 1/4	DSGM-01X-3180	1/4 BSP.F	DSGM-01X-3190	1/4 NPT	0.8 (1.8)
3/8	DSGM-01Y-31	Rc 3/8	—	—	DSGM-01Y-3190	3/8 NPT	0.8 (1.8)

- Sub-plates are available. Specify the sub-plate model number from the table above. When sub-plates are not used, the mounting surface should have a good machined finish.
- Sub-plates are those for 1/8 solenoid operated directional valves. For dimensoins, see page 356.

Instructions

Tank-Line Back Pressure

Check that the tank line back pressure does not exceed 0.2 MPa (29 PSI).

Vent Control

When the valve is used for vent control of relief valves or others, use the pipes of 6 mm (.24 in.) ID. 300 mm (11.8 in.) or less length for connection.
If the pressure is instable, provide a 1.0 to 1.5 mm (.04 to .06 in.) diameter orifice to the vent port of the relief valves or others.

Circuit Pressure Control

When the pressure in a circuit is directly controlled with this valve, set the trapped oil volume being more than 40 cm^3 (2.44 cu. in.).

Safety Valve Pressure Setting

The pressure of the safety valve at the maximum flow is preset at the value equal to the upper limit of the pressure adjustment range plus 2 MPa (290 PSI).
In case where the upper limit of operating pressure is low or the upper limit of flow rate to be used is different from the specified maximum flow, please adjust and determine the setting pressure of the safety valve at the value calculated from the following formula.

Setting pressure = (Operating pressure upper limit) + (Additional pressure indicated below)

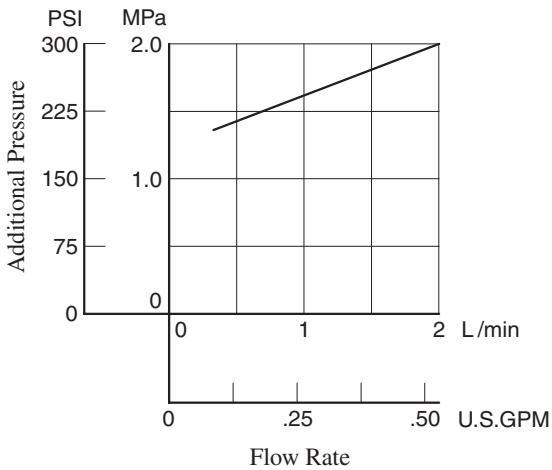

To lower the setting pressure, turn the safety valve pressure adjustment screw anti-clockwise. After adjustment, be sure to tighten the lock nut.

EDG-01∗-∗-1-PNT∗-51/5190

With Safety Valve

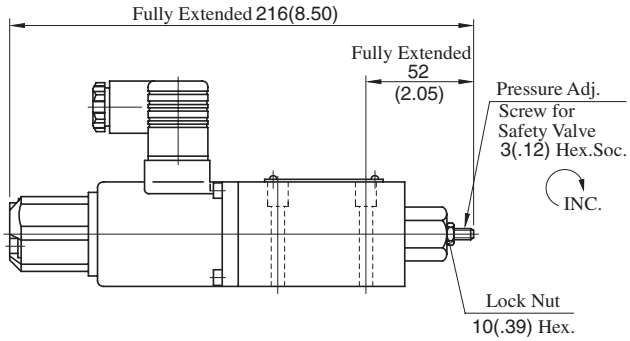

● For other dimensions, refer to the without safety valve.

EDG-01∗-∗-PNT∗-51/5190

Without Safety Valve

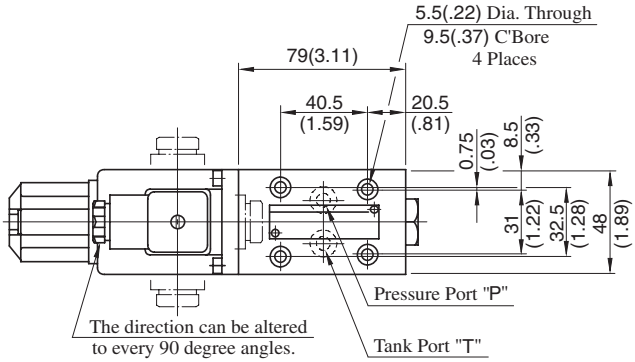

DIMENSIONS IN MILLIMETRES (INCHES)

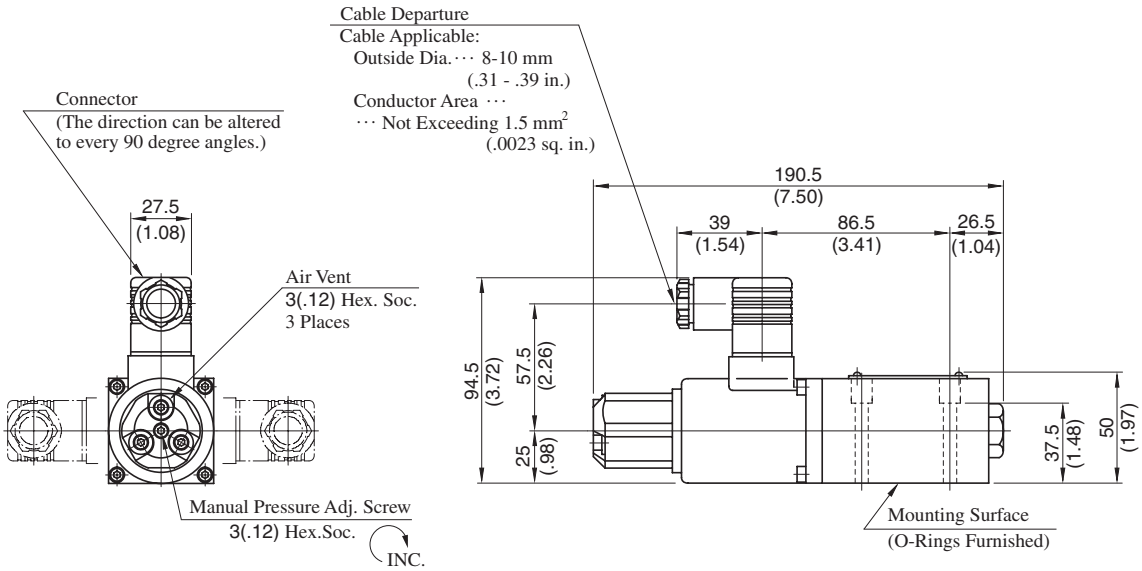

Note: For valve mounting surface dimensions, see the dimensional drawings of sub-plates (P.356) in common use.

Step Response (Example)

These characteristics have been obtained by measuring on each valve. Therefore, they may vary according to a hydraulic circuit to be used.

Flow Rate : 2 L/min (.53 U.S. GPM)
Trapped Oil Volume : 40 cm^3(2.44 cu. in.)
Viscocity : 30 mm^2/s (141 SSU)

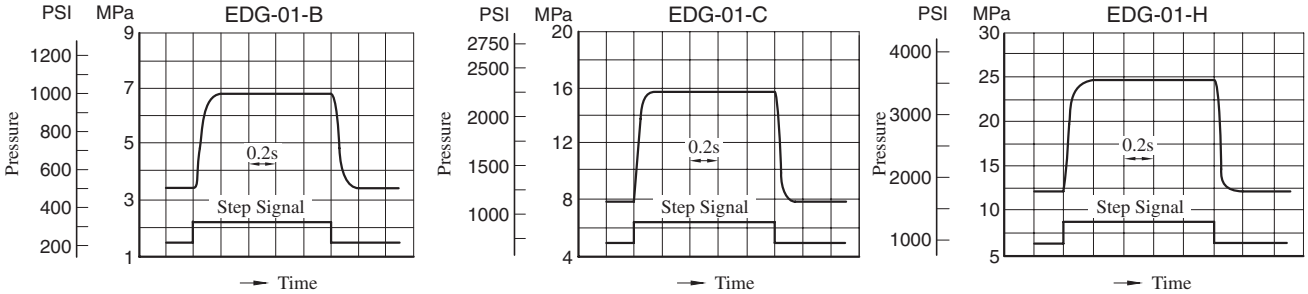

Frequency Response

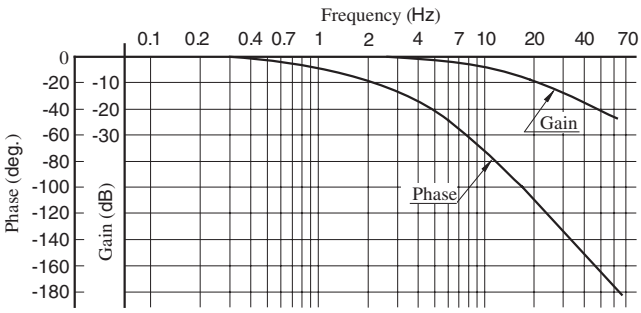

Flow Rate : 2 L/min (.53 U.S. GPM)
Pressure : 7.8 ± 1.6 MPa (1130 ± 230 PSI)
Trapped Oil Volume : 30 cm^3 (1.83 cu. in.)
Viscocity : 30 mm^2/s (141 SSU)

Control Pressure vs. Input Current

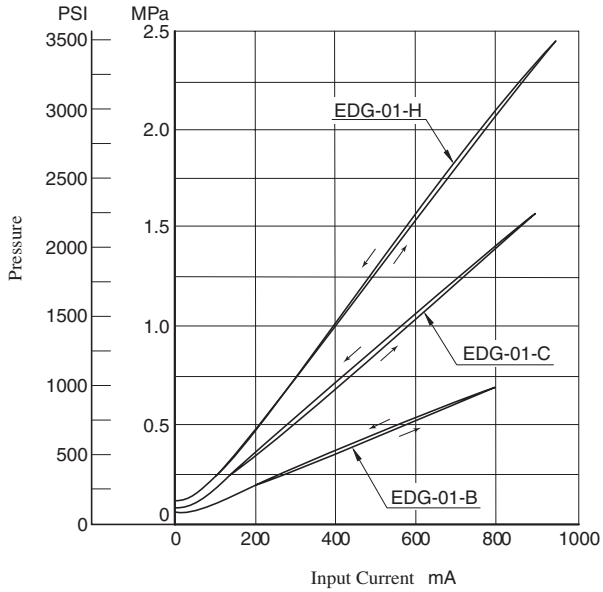

Min. Adjustment Pressure

Viscosity : 30 mm^2/s (141 SSU)

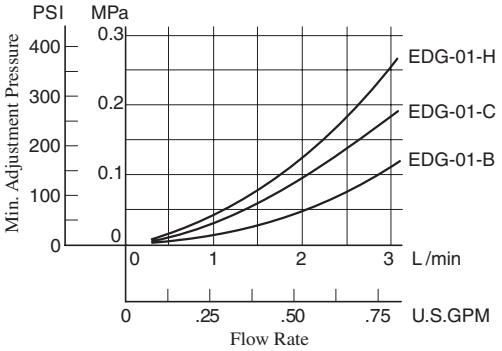

Flow Rate vs. Pressure

Viscosity : 30 mm^2/s (141 SSU)

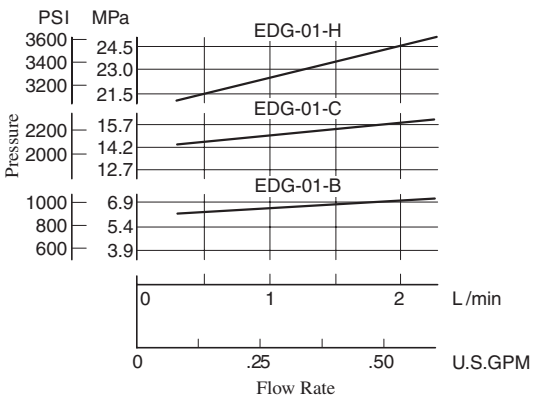

Viscosity vs. Pressure

Flow Rate : 2 L/min (.53 U.S. GPM)
Oil : ISO VG 46 Oil

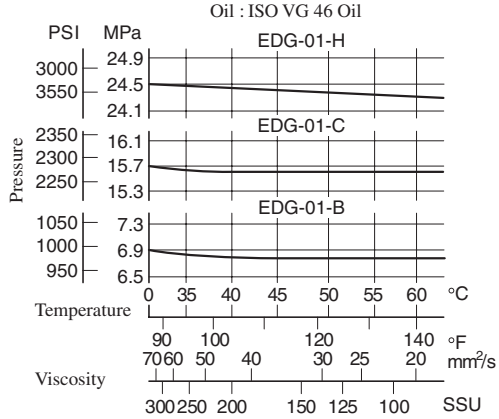

List of Seals and Solenoid Ass'y

Without Safety Valve

EDG-01∗-∗-PNT∗-51/5190
EDG-01V-∗-PNT∗-5103

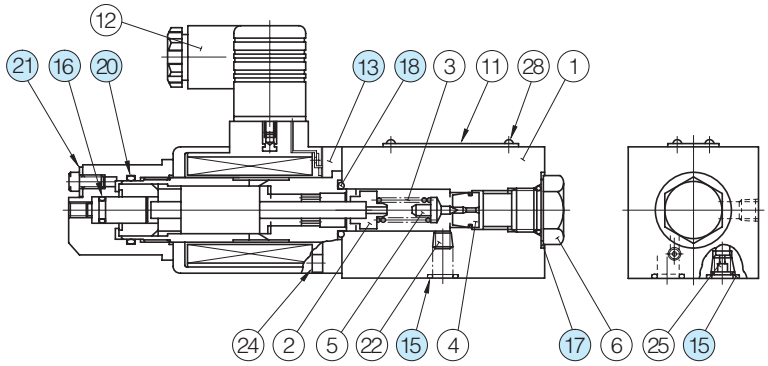

EDG-01-∗-PNT∗-5101

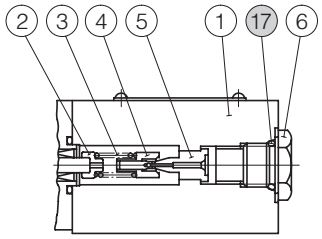

With Safety Valve

EDG-01∗-∗-1-PNT∗-51/5190
EDG-01V-∗-1-P∗T∗-5103/5197

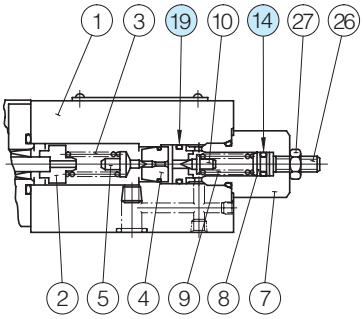

List of Seals

Item	Name of Parts	Part Numbers	Qty.	Remarks
14	O-Ring	SO-NA-P6	1	Included in Seal Kit Kit No.: KS-EDG-01-51
15	O-Ring	SO-NB-P9	2	
16	O-Ring	SO-NB-P7	1	
17	O-Ring	SO-NB-P14	1	
18	O-Ring	SO-NB-P18	1	
19	O-Ring	SO-NB-A013	1	
20	O-Ring	SO-NB-P22	1	
21	Fastener Seal	SG-FCF-4	1	

Note) O-ring (Item 16, 18, 20) and the fastener seal (Item 21) are included in the solenoid assembly.

Solenoid Ass'y

Valve Model Numbers	⑬ Solenoid Ass'y
EDG-01-∗-∗-P∗T∗-51/5190 EDG-01-∗-∗-P∗T∗-5101	E318-Y06M1-28-61
EDG-01V-∗-∗-P∗T∗-51/5190	E318-Y06M1-05-61
EDG-01V-∗-∗-PNT∗-5103	E318-Y06M1-04-61
EDG-01V-∗-1-PNT20-5197	E318-Y06M1-28-61

Note) The connector assembly GDM-211-B-11 (Item 12) is not included in the solenoid assembly.

Interchangeability between Current and New Design

EDG-01 series valve has changed model from 50 to 51 design in line with the solenoid improvement.

Specifications and Characteristics

No change in specifications and characteristics between current and new design.

Mounting Interchangeability

There is an interchangeability in the mounting dimensions, however, the outside shape and dimensions are changed as shown below due to solenoid improvement and other modifications.

Current: Design 50

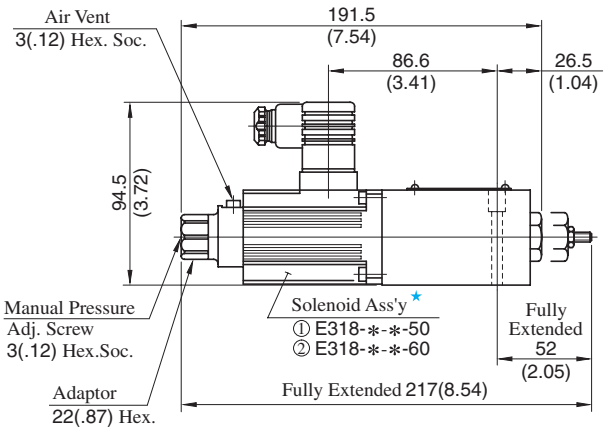

New: Design 51

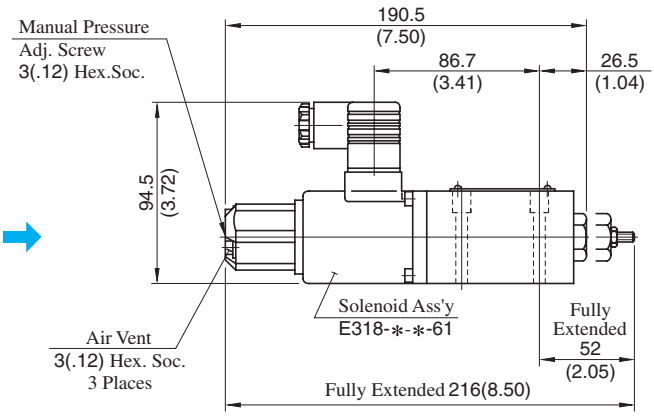

★The solenoid assembly current design comes in two types: ① E318-50 design and ② 60 design.
See the figure on the left for an external view of type ① . See the figure on the right for type ② .

DIMENSIONS IN MILLIMETRES (INCHES)

Proportional Electro-Hydraulic Relief Valves

This valve is derived by combining a small, high-performance 1/8 proportional electro-hydraulic pilot relief valve with a specially developed low-noise relief valve.
With this valve, it is possible to regulate the system pressure in proportion to the input current. Note that this valve is used in conjunction with the applicable power amplifier.

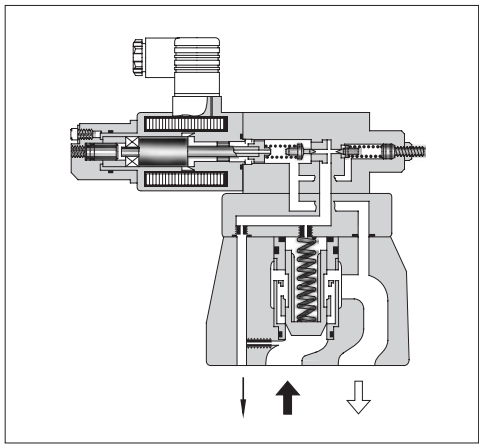

Specifications

Description \ Model Numbers	EBG-03	EBG-06	EBG-10
Max. Operating Pres. MPa (PSI)	24.5 (3550)	24.5 (3550)	24.5 (3550)
Max. Flow L/min(U.S.GPM)	100 (26.4)	200 (52.8)	400 (106)
Min. Flow L/min(U.S.GPM)	3 (.79)	3 (.79)	3 (.79)
Pressure Adjustment Range MPa (PSI)	Refer to Model Number Designation		
Rated Current	C : 770 mA H : 820 mA	C : 750 mA H : 800 mA	C : 730 mA H : 780 mA
Coil Resistance	10 Ω	10 Ω	10 Ω
Hysteresis	3% or less	3% or less	3% or less
Repeatability	1% or less	1% or less	1% or less
Approx. Mass kg (lbs.)	5.6 (12.3)	6.3 (13.9)	10 (22)

Graphic Symbols

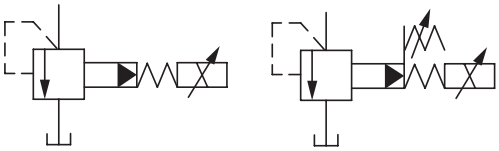

Without Safety Valve With Safety Valve

Model Number Designation

F-	EB	G	-03	-C	-T	-51	*
Special Seals	Series Number	Type of Mounting	Valve Size	Pres. Adj. Range MPa (PSI)	Safety Valve	Design Number	Design Standards
F: Special Seals for Phosphate Ester Type Fluid (Omit if not required)	**EB**: Proportional Electro-Hydraulic Relief Valve	**G**: Sub-plate Mounting	**03** **06** **10**	**C**: ★1 * - 15.7 (* - 2275) **H**: ★1 * - 24.5 (* - 3550)	**None**: With Safety Valve **T**: Without Safety Valve	**51**	Refer to ★2

★1. Min. adjustment pressure shall be referred to the curves on page 680.
★2. Design Standards: None ..... Japanese Standard "JIS" and European Design Standard
90 ..... N. American Design Standard

Attachment

Mounting Bolts

Valve Model Numbers	Socket Head Cap Screw		
	Japanese Standard "JIS" & European Design Standard	N. American Design Standard	Qty.
EBG-03	M12 × 40 Lg.	1/2 - 13 UNC × 1-1/2 Lg.	4
EBG-06	M16 × 50 Lg.	5/8 - 11 UNC × 2 Lg.	4
EBG-10	M20 × 60 Lg.	3/4 - 10 UNC × 2-1/4 Lg.	4

Applicable Power Amplifiers

For stable performance, it is rrecommended that Yuken's applicable power amplifiers be used (for details see page 767, 771, 780).

Model Numbers : AME-D-10-∗-20 SK1015-11 (For DC power supply)
AME-D2-1010-11 AMN-D-10 (For DC power supply)
SK1022-∗-∗-11

Sub-plate

Valve Model Numbers	Japanese Standard "JIS"		European Design Standard		N. American Design Standard		Approx. Mass kg (lbs)
	Sub-plate Model Numbers	Thread Size	Sub-plate Model Numbers	Thread Size	Sub-plate Model Numbers	Thread Size	
EBG-03	BGM-03-20	Rc 3/8	BGM-03-3080	3/8 BSP.F	BGM-03-2090	3/8 NPT	2.4 (5.3)
	BGM-03X-20	Rc 1/2	BGM-03X-3080	1/2 BSP.F	BGM-03X-2090	1/2 NPT	3.1 (6.8)
EBG-06	BGM-06-20	Rc 3/4	BGM-06-3080	3/4 BSP.F	BGM-06-2090	3/4 NPT	4.7 (10.4)
	BGM-06X-20	Rc 1	BGM-06X-3080	1 BSP.F	BGM-06X-2090	1 NPT	5.7 (12.6)
EBG-10	BGM-10-20	Rc 1-1/4	BGM-10-3080	1-1/4 BSP.F	BGM-10-2090	1-1/4 NPT	8.4 (18.5)
	BGM-10X-20	Rc 1-1/2	BGM-10X-3080	1-1/2 BSP.F	BGM-10X-2090	1-1/2 NPT	10.3 (22.7)

- Sub-plates are available. Specify the sub-plate model number from the table above. When sub-plates are not used, the mounting surface should have a good machined finish.
- Sub-plates are those for pilot operated relief valves. For dimensions, see page 213.

Instructions

Safety Valve

The pressure of the safety valve for EBG-03 is preset at the value equal to the upper limit of the pressure adjustment range plus 2 MPa (290 PSI) subject to a flow rate of 50 L/min (13.2 U.S.GPM).
The same for EBG-06 is preset at the value equal to the upper limit of the pressure adjustment range plus 3.5 MPa (510 PSI) subject to a flow rate of 100 L/min (26.4 U.S.GPM).
The same for EBG-10 is preset at the value equal to the upper limit of the pressure adjustment range plus 4 MPa (580 PSI) subject to a flow rate of 200 L/min (52.8 U.S.GPM).
In case where the upper limit of operating pressure is low or the upper limit of flow rate to be used is different from the specified maximum flow, please adjust and determine the setting pressure of the safety valve at the value calculated from the following formula.

Setting pressure = (Operating pressure upper limit) + (Additional pressure indicated blow)

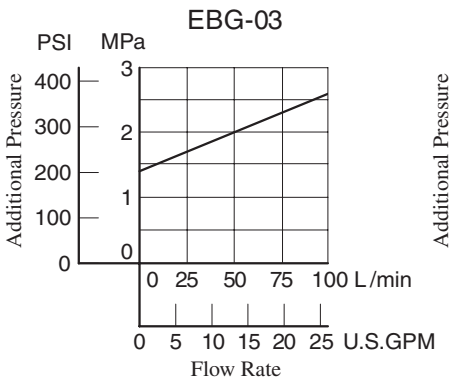

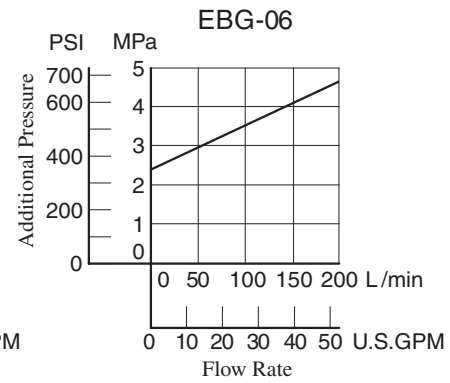

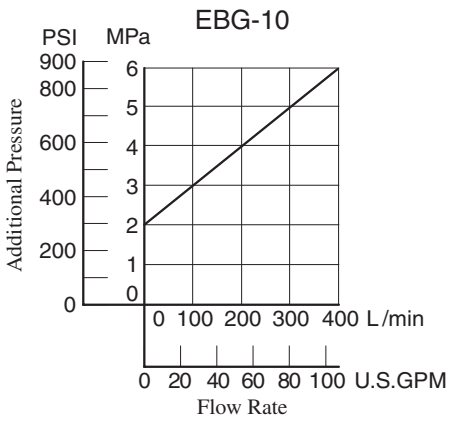

To lower the setting pressure, turn the safety valve pressure adjustment screw anti-clockwise. After adjustment, be sure to tighten the lock nut.

Mounting Surface
EBG-03 : ISO 6264-AR-06-2-A
EBG-06 : ISO 6264-AS-08-2-A

DIMENSIONS IN MILLIMETRES (INCHES)

EBG-03/06-∗-51/5190

With Safety Valve

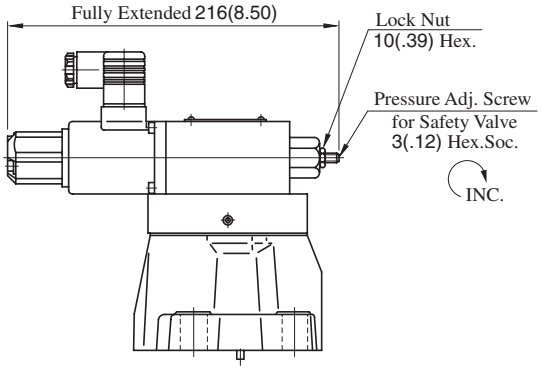

● For other dimensions, refer to the without safety valve.

EBG-03/06-∗-T-51/5190

Without Safety Valve

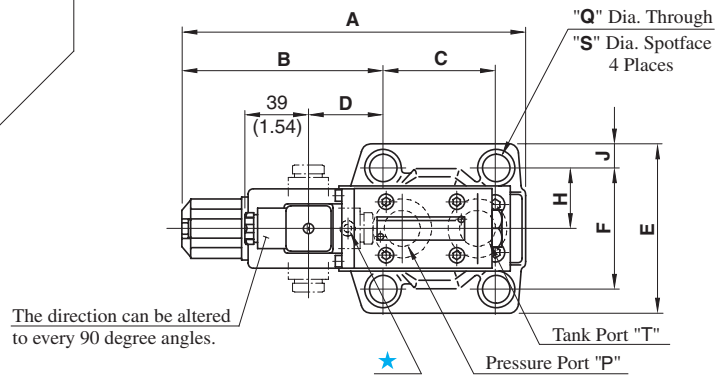

★ This port is not used. It is provided because of the common use of the body with the low-noise type pilot operated relief valve.
On the sub-plate, plug the port which corresponds to this port.

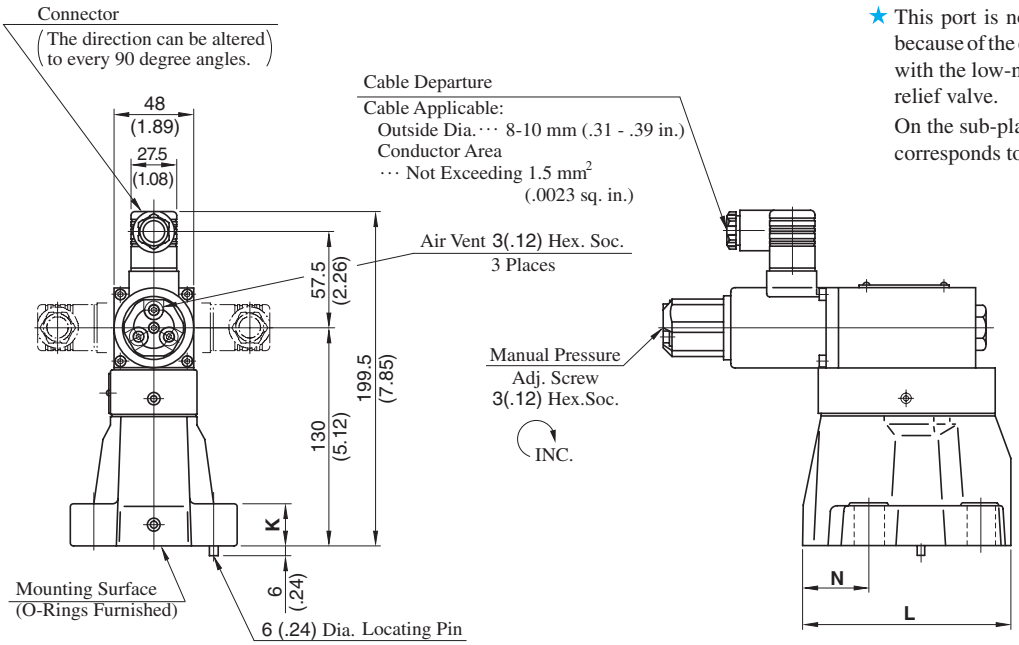

Model Numbers	Dimensions mm (Inches)												
	A	B	C	D	E	F	H	J	K	L	N	Q	S
EBG-03	197.5 (7.78)	117.6 (4.63)	53.8 (2.12)	40.3 (1.59)	76 (2.99)	53.8 (2.12)	26.9 (1.06)	11.1 (.44)	21.5 (.85)	106 (4.17)	26.1 (1.03)	13.5 (.53)	21 (.83)
EBG-06	205.5 (8.09)	119.5 (4.70)	66.7 (2.63)	42.1 (1.66)	98 (3.86)	70 (2.76)	35 (1.38)	14 (.55)	26 (1.02)	122 (4.80)	36 (1.42)	17.5 (.69)	26 (1.02)

Note: For valve mounting surface dimensions, see the dimensional drawings of sub-plates (p.213) in common use.

Mounting surface:
ISO 6264-AT-10-2-A

DIMENSIONS IN MILLIMETRES (INCHES)

EBG-10-∗-51/5190

With Safety Valve

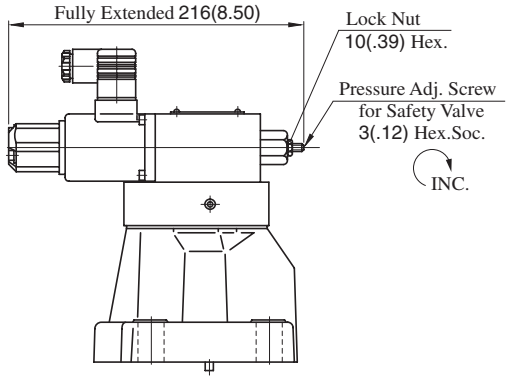

- For other dimensions, refer to the without safety valve.

EBG-10-∗-T-51/5190

Without Safety Valve

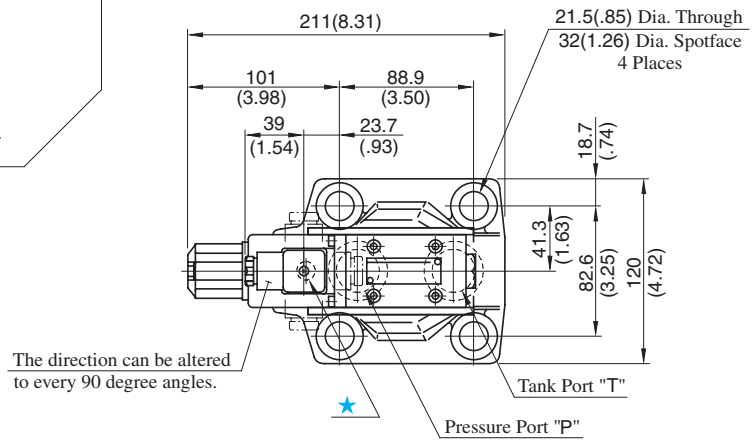

★ This port is not used. It is provided because of the common use of the body with the low-noise type pilot operated relief valve.
On the sub-plate, plug the port which corresponds to this port.

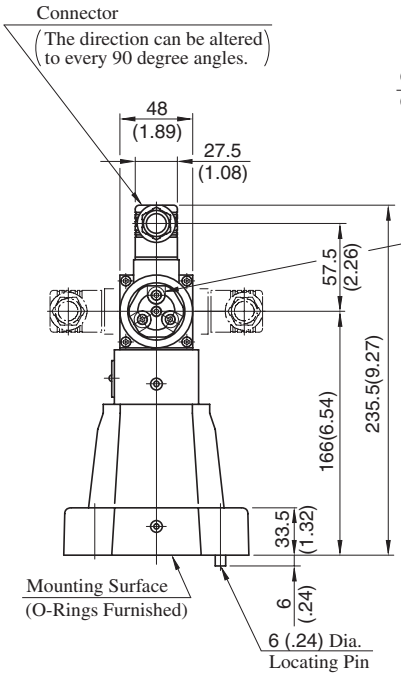

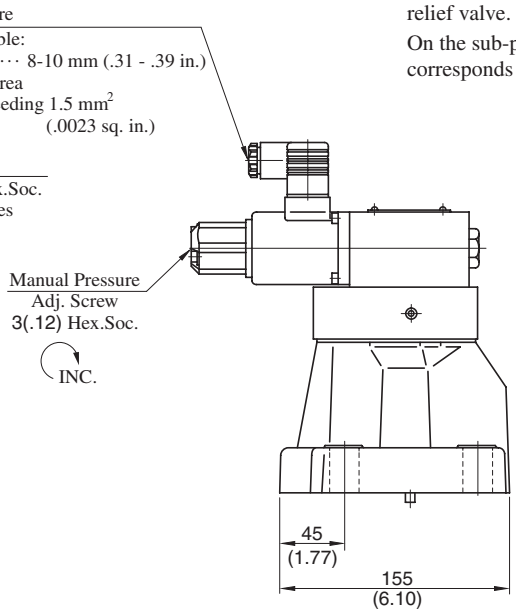

Note: For valve mounting surface dimensions, see the dimensional drawings of sub-plates (p.213) in common use.

Min. Adjustment Pressure

Viscosity : 30 mm²/s (141 SSU)

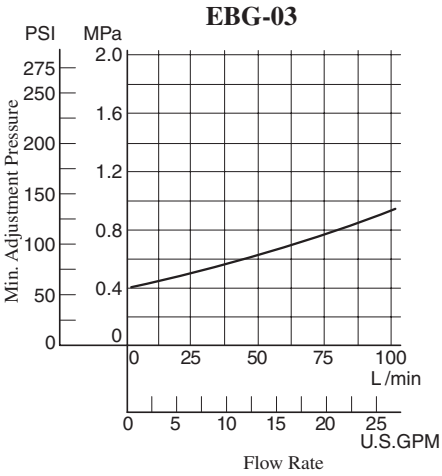

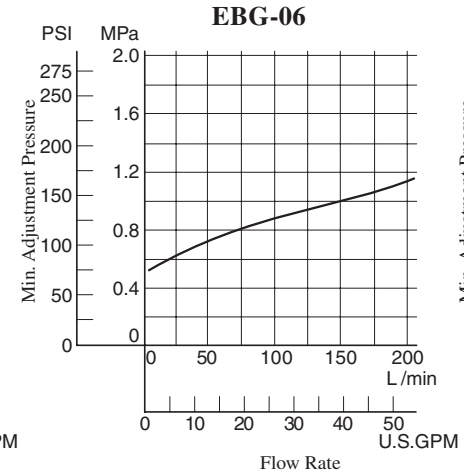

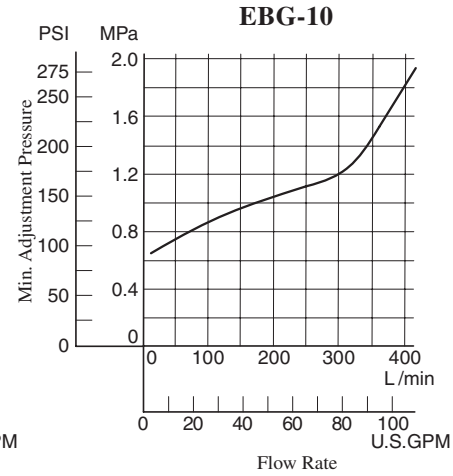

Step Response (Example)

These Characteristics have been obtained by measuring on each valve.
Therefore, they may vary according to a hydraulic circuit to be used.

Trapped Oil Volume : 1 L (.264 U.S. Gallons)
Viscosity : 30 mm²/s (141 SSU)

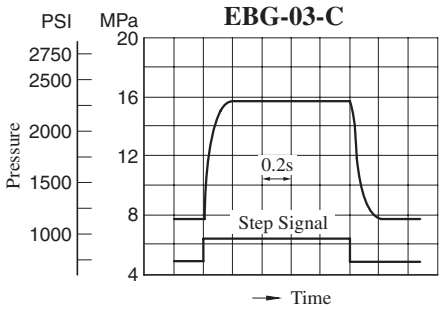

(Flow Rate : 100 L/min, 26.4 U.S.GPM)

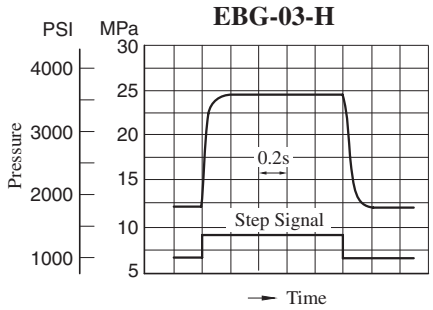

(Flow Rate : 100 L/min, 26.4 U.S.GPM)

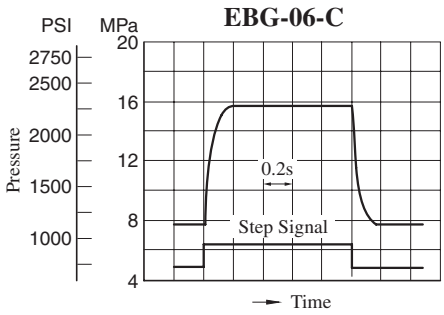

(Flow Rate : 200 L/min, 52.8 U.S.GPM)

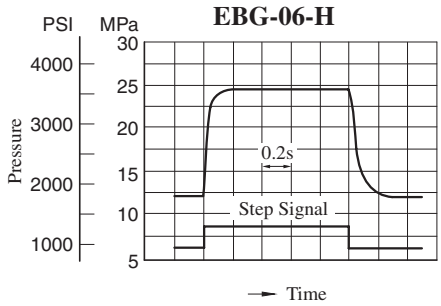

(Flow Rate : 200 L/min, 52.8 U.S.GPM)

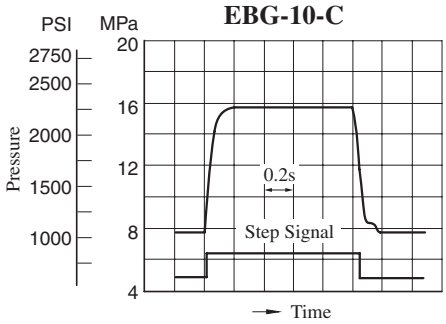

(Flow Rate : 400 L/min, 106 U.S.GPM)

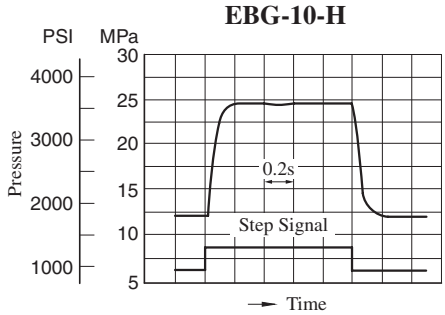

(Flow Rate : 400 L/min, 106 U.S.GPM)

Input Current vs. Pressure

EBG-03

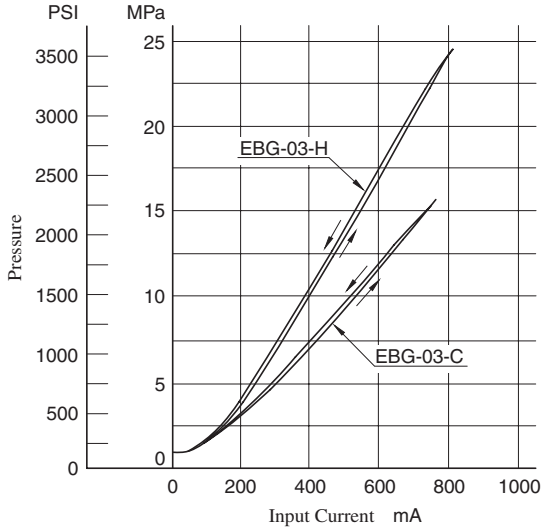

EBG-06

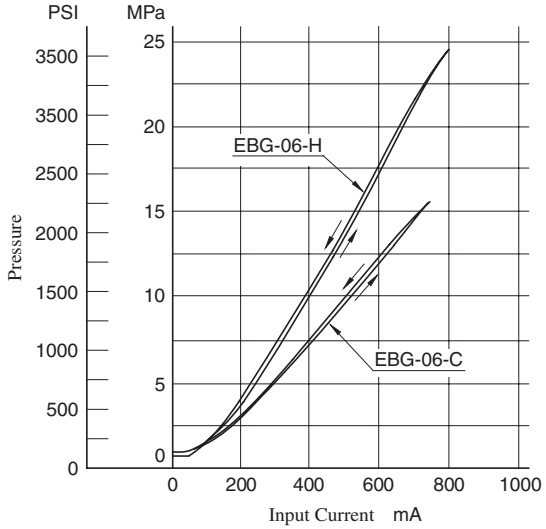

EBG-10

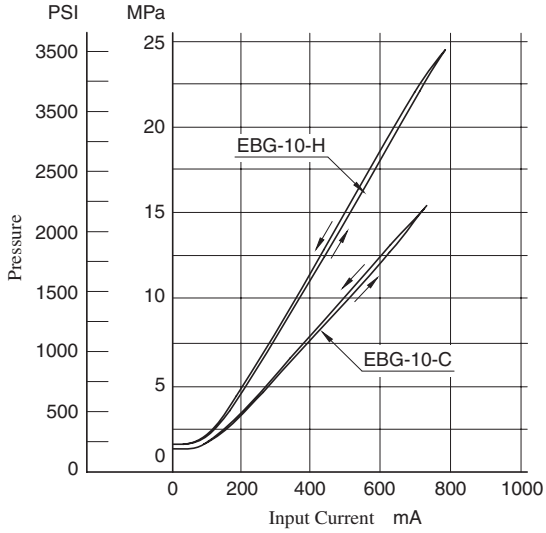

Frequency Response

Trapped Oil Volume : 1 L (.264 U.S. Gallons)
Viscocity : 30 mm^2/s (141 SSU)

EBG-03

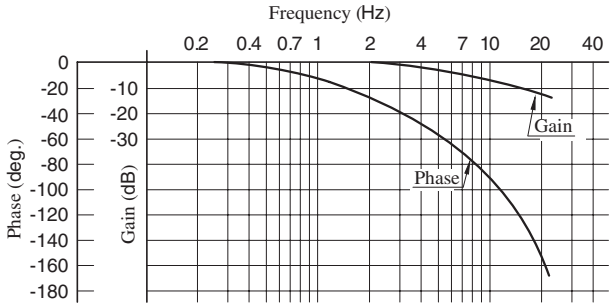

Pressure : 7.8 ± 1.6 MPa
(1130 ± 230 PSI)
Flow Rate : 100 L/min
(26.4 U.S.GPM)

EBG-06

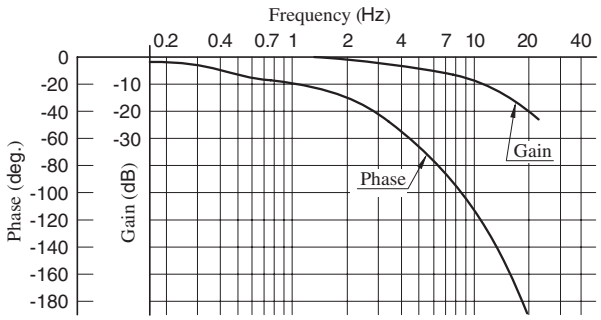

Pressure : 7.8 ± 1.6 MPa
(1130 ± 230 PSI)
Flow Rate : 200 L/min
(52.8 U.S.GPM)

EBG-10

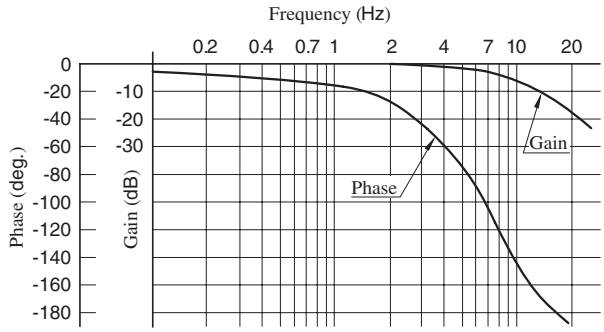

Pressure : 7.8 ± 1.6MPa
(1130 ± 230 PSI)
Flow Rate : 400 L/min
(106 U.S.GPM)

Viscosity vs. Pressure

Oil : ISO VG 46 Oil

EBG-03

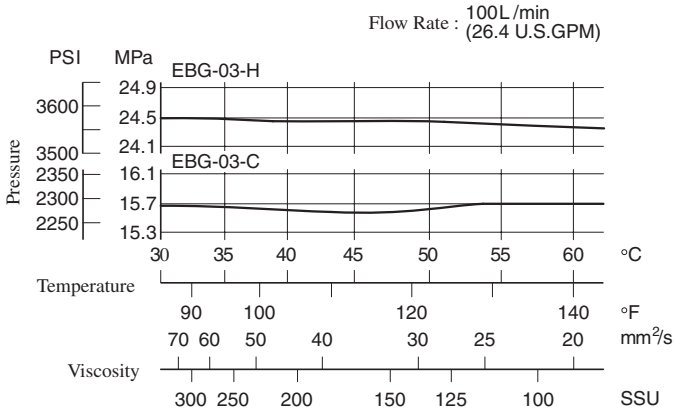

EBG-06

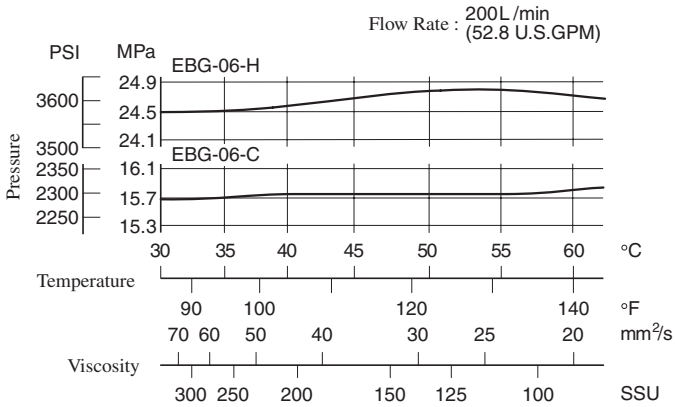

EBG-10

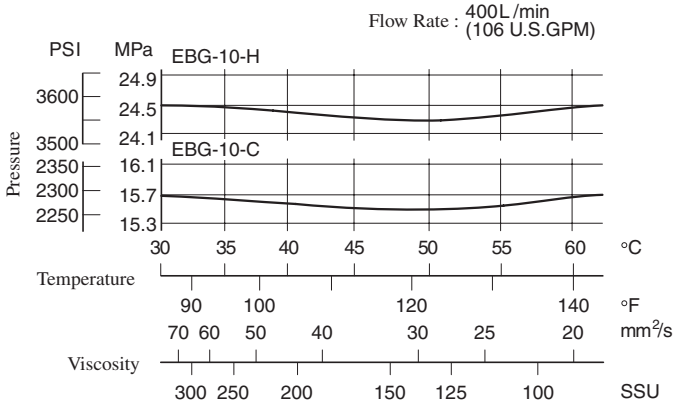

Flow Rate vs. Pressure

Viscosity : 30 mm²/s (141 SSU)

EBG-03

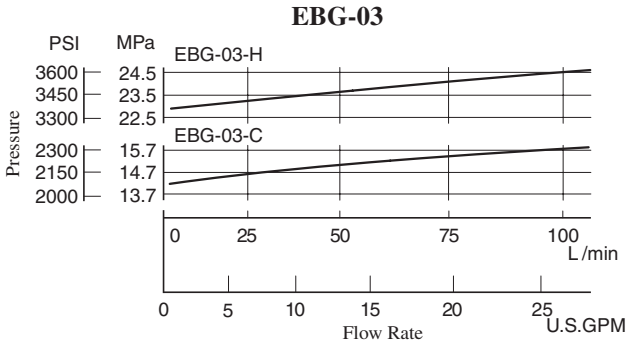

EBG-06

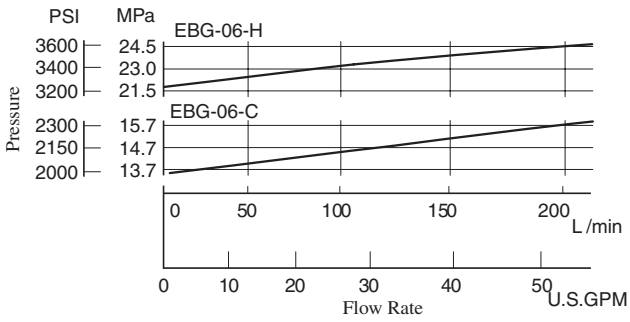

EBG-10

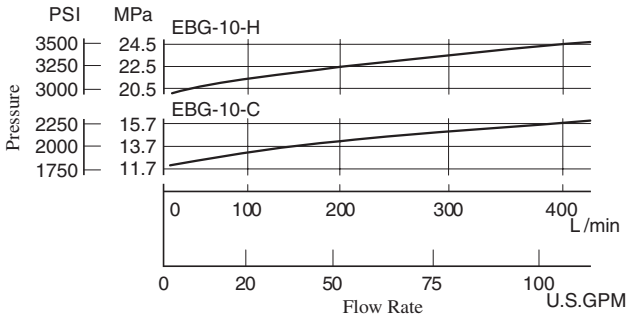

List of Seals and Pilot Valves

03
EBG-06-∗-∗-51/5190
10

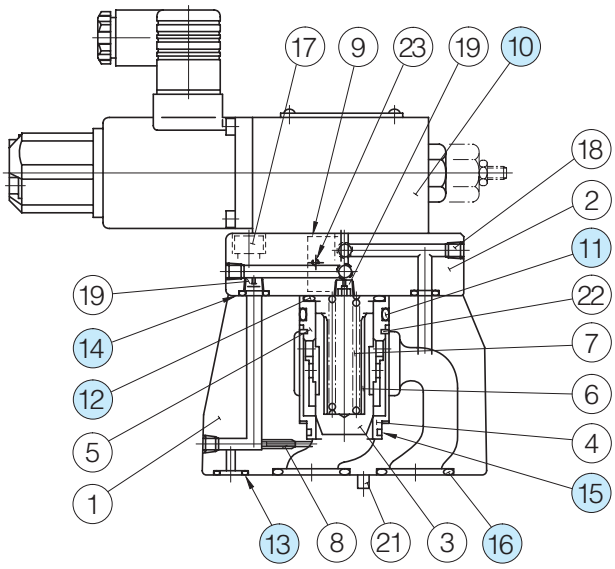

Pilot Valve

Valve Model Numbers	⑩ Pilot Valve Model Numbers
EBG-03-C-51/5190	EDG-01V-C-1-PNT09-51
EBG-03-H-51/5190	EDG-01V-H-1-PNT09-51
EBG-03-C-T-51/5190	EDG-01V-C-PNT09-51
EBG-03-H-T-51/5190	EDG-01V-H-PNT09-51
EBG-06-C-51/5190	EDG-01V-C-1-PNT10-51
EBG-06-H-51/5190	EDG-01V-H-1-PNT10-51
EBG-06-C-T-51/5190	EDG-01V-C-PNT10-51
EBG-06-H-T-51/5190	EDG-01V-H-PNT10-51
EBG-10-C-51/5190	EDG-01V-C-1-PNT11-5103
EBG-10-H-51/5190	EDG-01V-H-1-PNT11-5103
EBG-10-C-T-51/5190	EDG-01V-C-PNT11-5103
EBG-10-H-T-51/5190	EDG-01V-H-PNT11-5103

Note: For the details of pilot valves, refer to "Pilot Relief Valves" on page 674.

List of Seals

Item	Name of Parts	Part Numbers			Qty.
		EBG-03	EBG-06	EBG-10	
11	O-Ring	SO-NB-P32	SO-NB-P32	SO-NB-P42	1
12	O-Ring	SO-NB-P28	SO-NB-P28	SO-NB-P28	1
13	O-Ring	SO-NB-P9	SO-NB-P11	SO-NB-P9	1
14	O-Ring	SO-NB-P9	SO-NB-P9	SO-NB-P9	2
15	O-Ring	SO-NB-A024	SO-NB-A024	SO-NB-A128	1
16	O-Ring	SO-NB-P18	SO-NB-P28	SO-NB-P32	2

Note) When ordering seals, please specify the seal kit number from the table below. In addition to the above O-rings, seals for pilot valve are included in the seal kit. For the details of the pilot valve seals, see page 674.

List of Seal Kit

Model Numbers	Seal Kit Numbers
EBG-03	KS-EBG-03-51
EBG-06	KS-EBG-06-51
EBG-10	KS-EBG-10-51

Interchangeability between Current and New Design

EBG-03/06/10 series valves have changed model from 50 to 51 design in line with the model change of pilot valve (EDG-01).

Specifications and Characteristics

No change in specifications and characteristics between current and new design.

Mounting Interchangeability

There is an interchangeability in the mounting dimensions, however, the outside shape and dimensions are changed as shown below due to pilot valve improvement and other modifications.

Current: Design 50

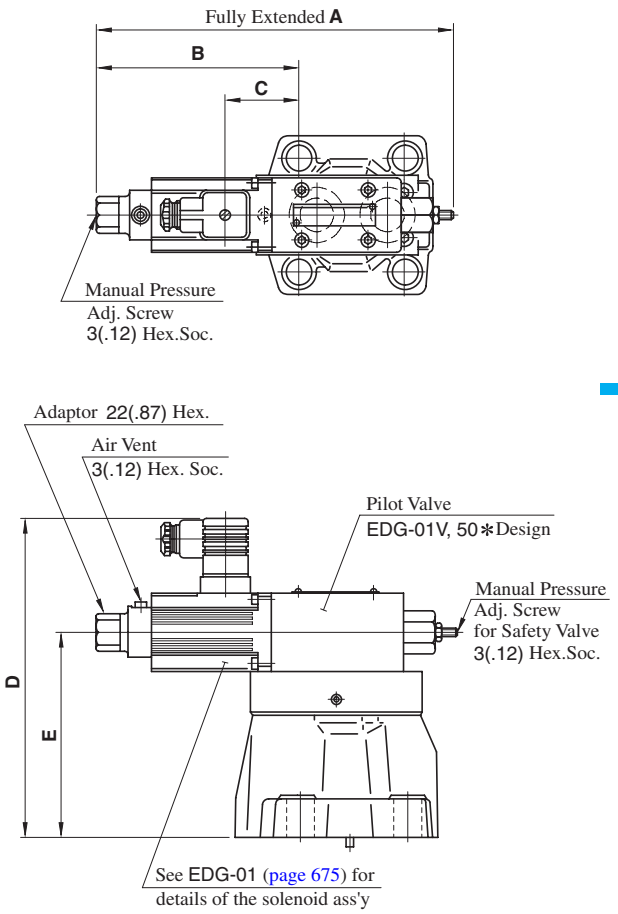

New: Design 51

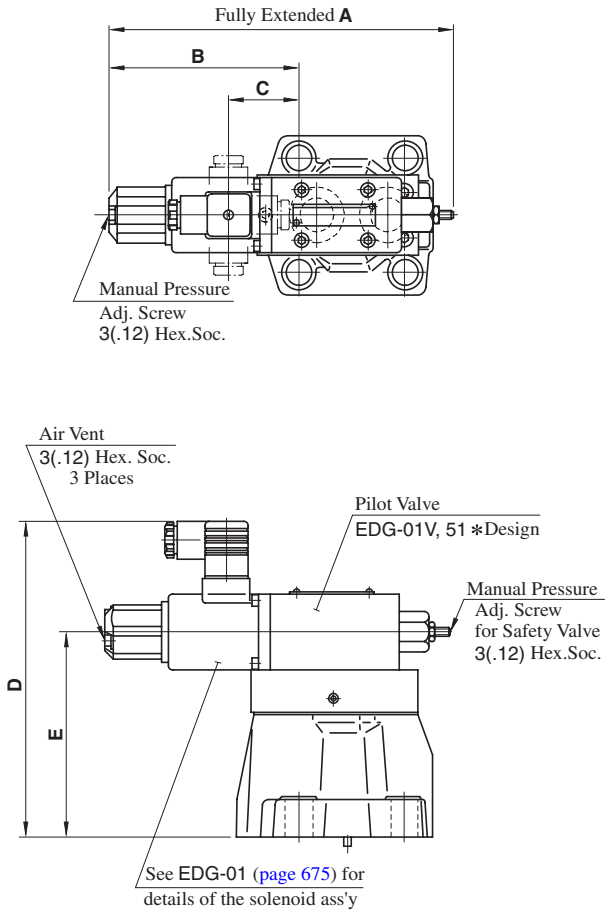

Model Numbers		A	B	C	D	E
Current	EBG-03-∗-∗-50/5090	217 (8.54)	118.6 (4.67)	40.2 (1.58)	199.5 (7.85)	130 (5.12)
New	EBG-03-∗-∗-51/5190	216 (8.50)	117.6 (4.63)	40.2 (1.59)		
Current	EBG-06-∗-∗-50/5090	217 (8.54)	120.5 (4.74)	42.1 (1.66)	199.5 (7.85)	130 (5.12)
New	EBG-06-∗-∗-51/5190	216 (8.50)	119.5 (4.70)	42.1 (1.66)		
Current	EBG-10-∗-∗-50/5090	217 (8.54)	102 (4.02)	23.6 (.93)	235.5 (9.27)	166 (6.54)
New	EBG-10-∗-∗-51/5190	216 (8.50)	101 (3.98)	23.6 (.93)		

DIMENSIONS IN MILLIMETRES (INCHES)

Proportional Electro-Hydraulic Relieving and Reducing Valves

This valve is derived by combining a small, high-performance 1/8 proportional electro-hydraulic pilot relief valve with a relieving and reducing valve.
With this valve, it is possible to regulate the system pressure in proportion to the input current.
Incorporating a relief mechanism, this valve provides a good response speed and the pressure decreases even if the load is large. Note that this valve is used in conjunction with the applicable power amplifier.

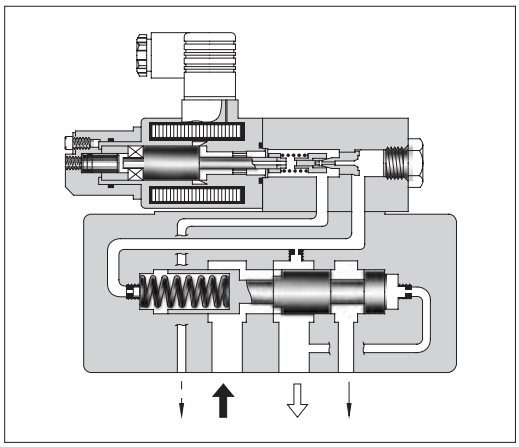

Specifications

Description \ Model Numbers	ERBG-06	ERBG-10
Max. Operating Pres. MPa (PSI)	24.5 (3550)	24.5 (3550)
Max. Flow L/min(U.S.GPM)	100 (26.4)	250 (66)
Max. Relieving Flow L/min(U.S.GPM)	35 (9.24) ★	15 (3.96) ★
Secondary Pres. Adj. Range MPa (PSI)	Refer to Model Number Designation	
Rated Current	B : 800 mA C : 800 mA H : 950 mA	B : 800 mA C : 800 mA H : 950 mA
Coil Resistance	10 Ω	10 Ω
Hysteresis	3% or less	3% or less
Repeatability	1% or less	1% or less
Approx. Mass kg (lbs.)	12 (26.5)	13.5 (29.8)

★ The values shown are those obtained where the differential pressure between the secondary pressure port and tank port is 13.7 MPa (2000 PSI).

Graphic Symbol

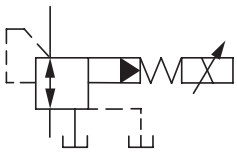

Model Number Designation

F-	ERB	G	-06	-C	-51	*
Special Seals	Series Number	Type of Mounting	Valve Size	Secondary Pres. Adj. Range MPa (PSI)	Design Number	Design Standards
F: Special Seals for Phosphate Ester Type Fluid (Omit if not required)	**ERB**: Proportional Electro-Hydraulic Relieving and Reducing Valve	**G**: Sub-plate Mounting	**06**	**B**: 0.8 - 6.9 (115 - 1000) **C**: 1.2 - 13.7 (175 - 2000) **H**: 1.5 - 20.6 (220 - 3000)	**51**	Refer to ★
			10	**B**: 0.9 - 6.9 (130 - 1000) **C**: 1.2 - 13.7 (175 - 2000) **H**: 1.5 - 20.6 (220 - 3000)		

★ Design Standards: None ..... Japanese Standard "JIS" and European Design Standard
90 ..... N. American Design Standard

Attachment

Mounting Bolts

Valve Model Numbers	Socket Head Cap Screw		
	Japanese Standard "JIS" & European Design Standard	N. American Design Standard	Qty.
ERBG-06	M10 × 70 Lg.	3/8 - 16 UNC × 2-3/4 Lg.	4
ERBG-10	M10 × 70 Lg.	3/8 - 16 UNC × 2-3/4 Lg.	6

Applicable Power Amplifier

For stable performance, it is recommended that Yuken's applicable power ampliffiers be used (for details see page 767, 771, 780).

Model Numbers : AME-D-10-∗-20
AME-D2-1010-11
SK1022-∗-∗-11
SK1015-11 (For DC power supply)
AMN-D-10 (For DC power supply)

Sub-plate

Valve Model Numbers	Japanese Standard "JIS"		European Design Standard		N. American Design Standard		Approx. Mass kg (lbs.)
	Sub-plate Model Numbers	Thread Size	Sub-plate Model Numbers	Thread Size	Sub-plate Model Numbers	Thread Size	
ERBG-06	ERBGM-06-20	Rc 3/4	ERBGM-06-2080	3/4 BSP.F	ERBGM-06-2090	3/4 NPT	3.0 (6.6)
ERBG-10	ERBGM-10-10	Rc 1-1/4	ERBGM-10-1080	1-1/4 BSP.F	ERBGM-10-1090	1-1/4 NPT	6.5 (14.3)

● Sub-plates are available. Specify the sub-plate model number from the table above. When sub-plates are not used, the mounting surface should have a good machined finish.

Instructions

Primary Pressure Required for Preselected Pressure

The primary pressure must be 1 MPa (145 PSI) higher than the preselected pressure.

Drain Back Pressure

Check that the drain back pressure does not exceed 0.2 MPa (29 PSI).

Trapped Oil Volume

The recommended secondary side trapped oil volume is about 20 liters (5.28 U.S.Gallons). Note that the trapped oil volume must not be lower than 1.4 liters (.37 U.S.Gallons).

ERBG-06-∗-51/5190

DIMENSIONS IN MILLIMETRES (INCHES)

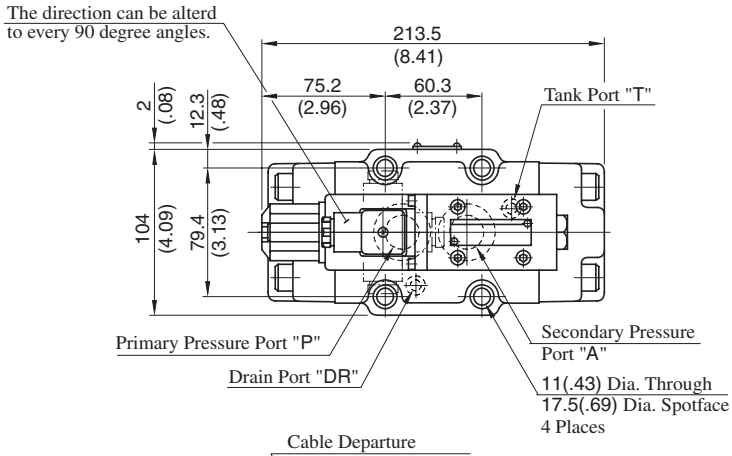

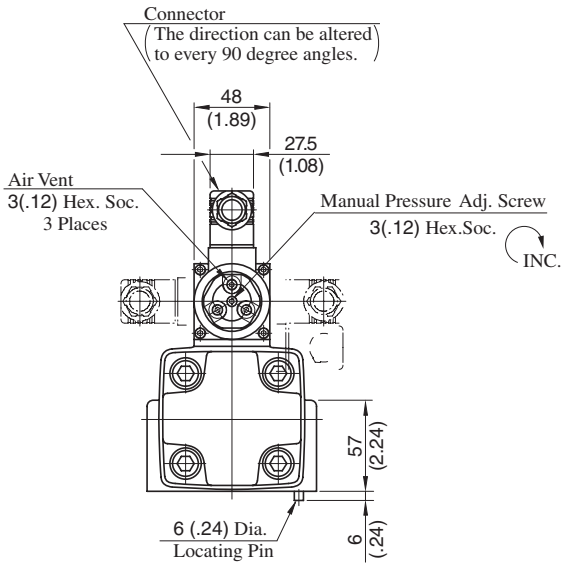

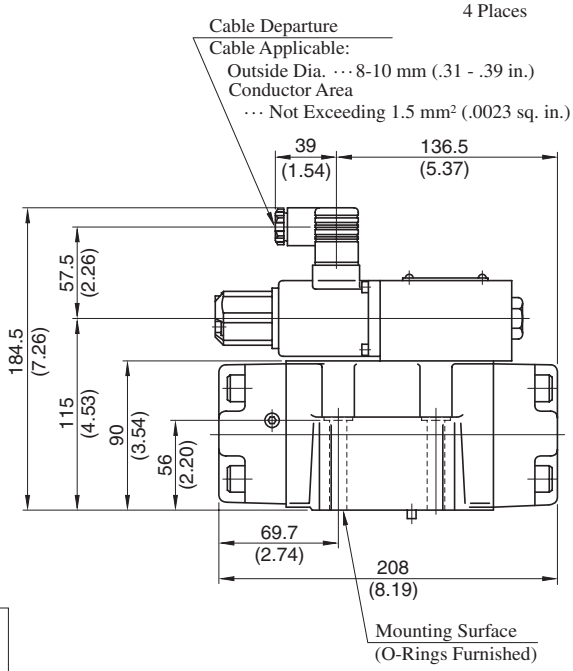

Sub-plate:
ERBGM-06-20/2080/2090

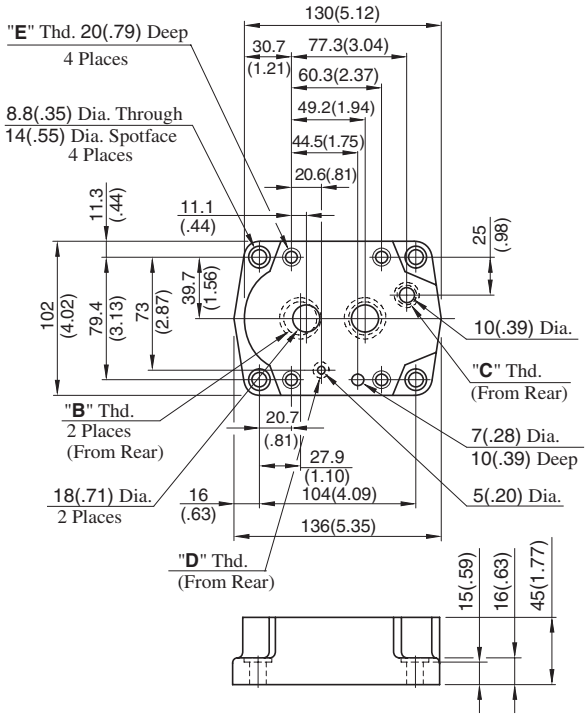

Sub-plate Model Numbers	Thread Size			
	"B" Thd.	"C" Thd.	"D" Thd.	"E" Thd.
ERBGM-06-20	Rc 3/4	Rc 3/8	Rc 1/4	M10
ERBGM-06-2080	3/4 BSP.F	3/8 BSP.F	1/4 BSP.F	
ERBGM-06-2090	3/4 NPT	3/8 NPT	1/4 NPT	3/8-16 UNC

ERBG-10-∗-51/5190

DIMENSIONS IN MILLIMETRES (INCHES)

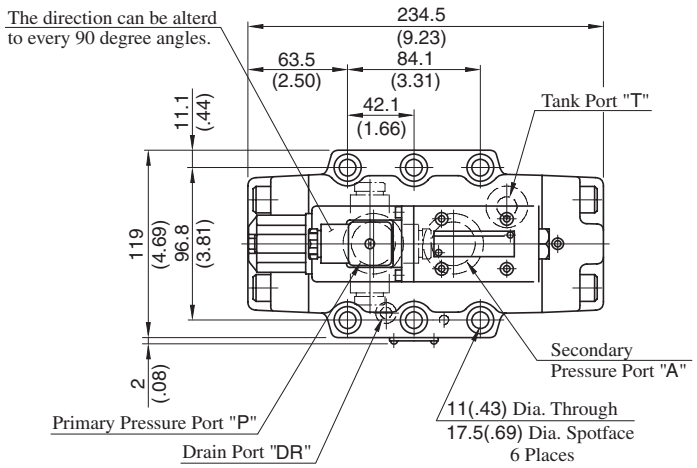

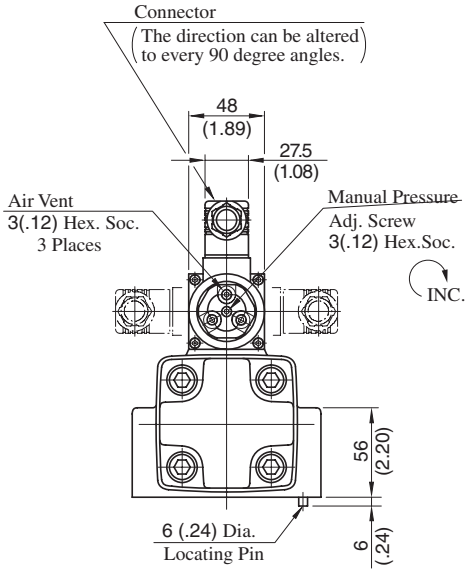

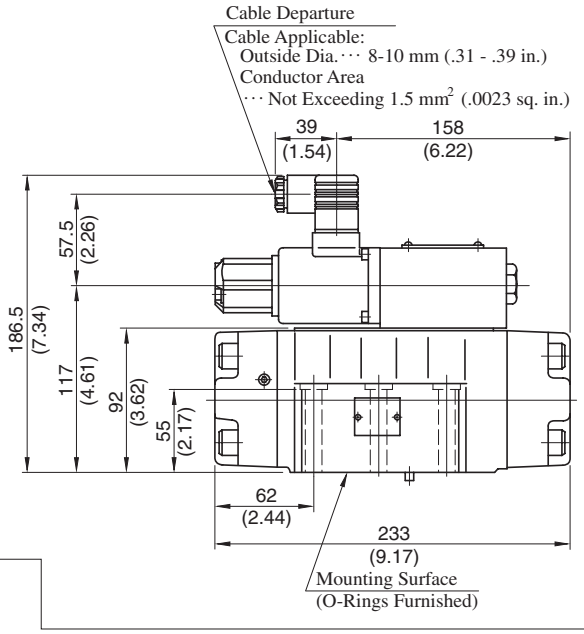

Sub-plate
ERBGM-10-10/1080/1090

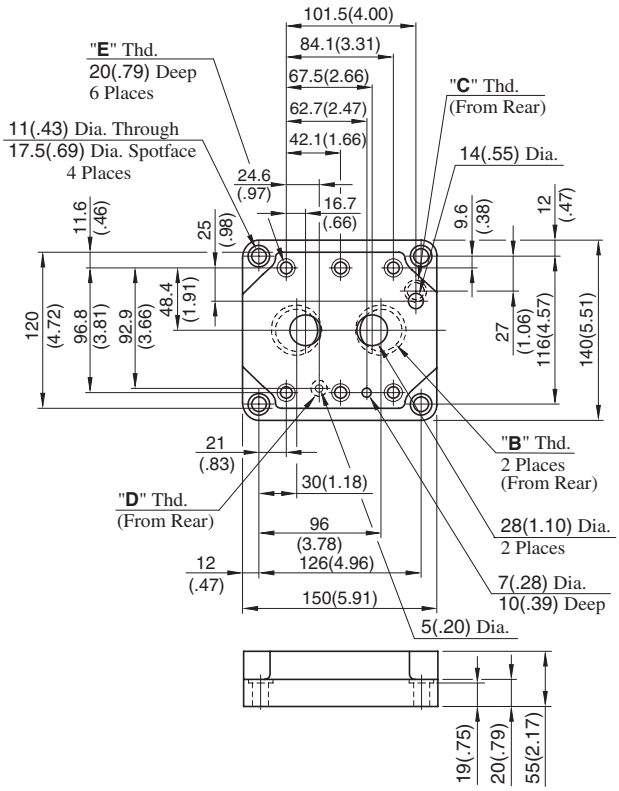

Sub-plate Model Numbers	Thread Size			
	"B" Thd.	"C" Thd.	"D" Thd.	"E" Thd.
ERBGM-10-10	Rc 1-1/4	Rc 3/8	Rc 1/4	M10
ERBGM-10-1080	1-1/4 BSP.F	3/8 BSP.F	1/4 BSP.F	
ERBGM-10-1090	1-1/4 NPT	3/8 NPT	1/4 NPT	3/8-16 UNC

Step Response (Example)

The following step response characteristics are taken when the trapped oil volume is 20 liters (5.28 U.S.Gallons). The step response varies by trapped oil volume.

Primary Pressure : 24.5 MPa (3550 PSI)
Trapped Oil Volume : 20 L (5.28 U.S.Gallons)
Viscocity : 30 mm²/s (141 SSU)

ERBG-06-B

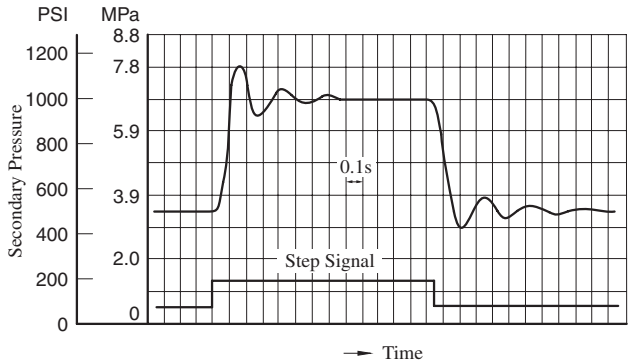

ERBG-10-B

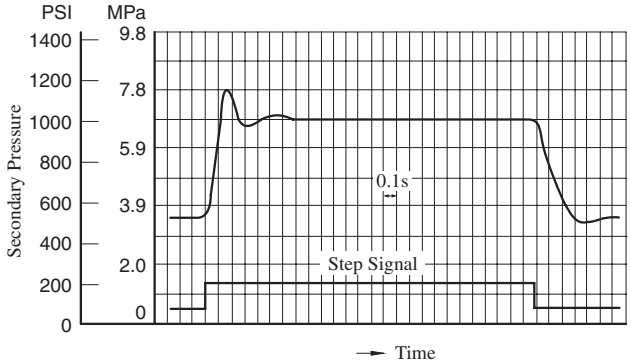

ERBG-06-C

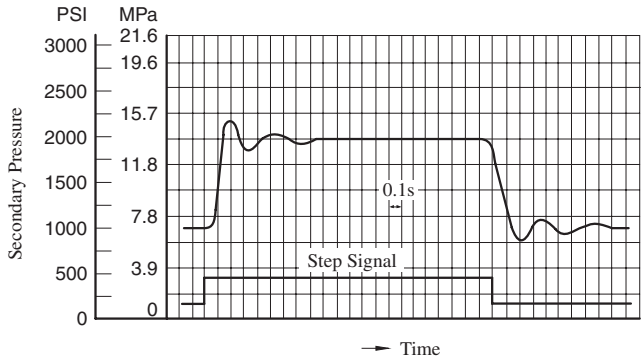

ERBG-10-C

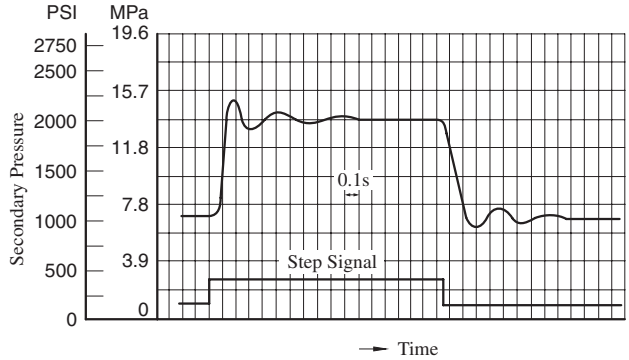

ERBG-06-H

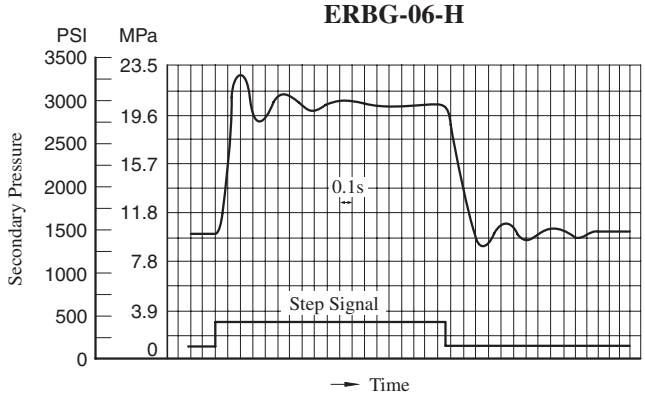

ERBG-10-H

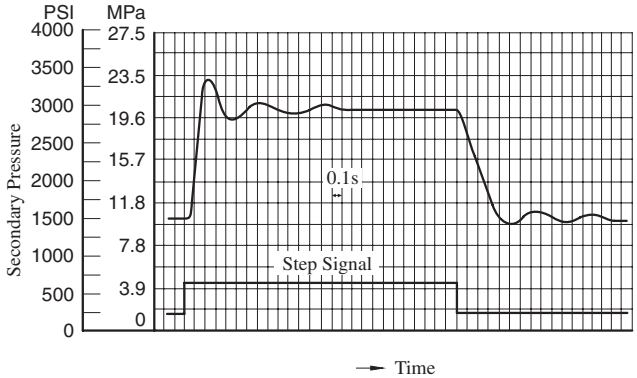

Input Current vs. Secondary Pressure

Primary Pressure : 24.5 MPa (3550 PSI)
Viscocity : 30 mm²/s (141 SSU)

ERBG-06

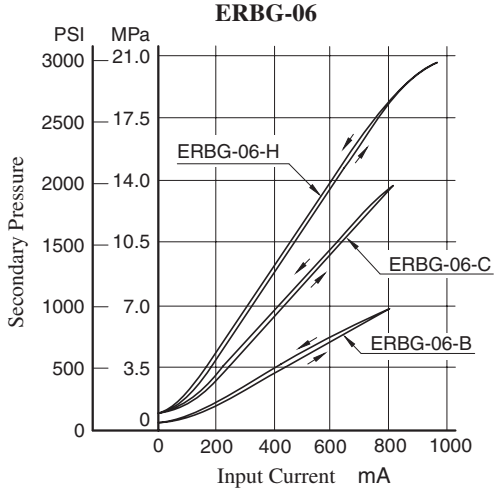

ERBG-10

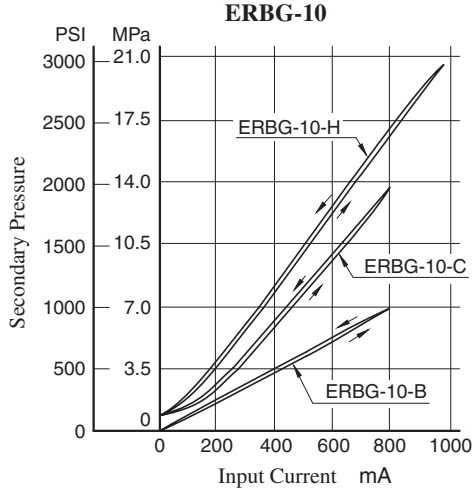

Frequency Response

Primary Pressure : 24.5 MPa (3550 PSI)
Trapped Oil Volume : 20 L (5.28 U.S.Gallons)
Viscocity : 30 mm²/s (141 SSU)

ERBG-06-B

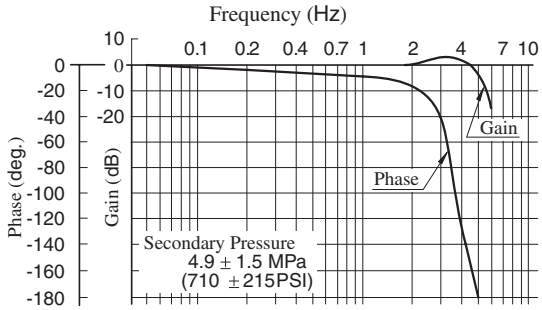

ERBG-10-B

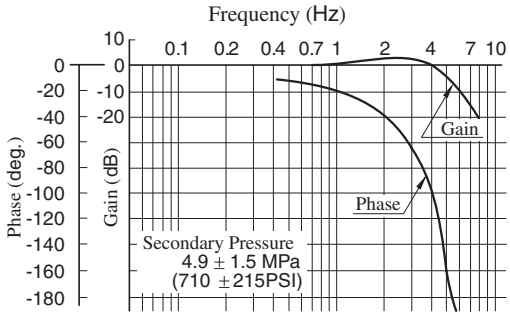

ERBG-06-C

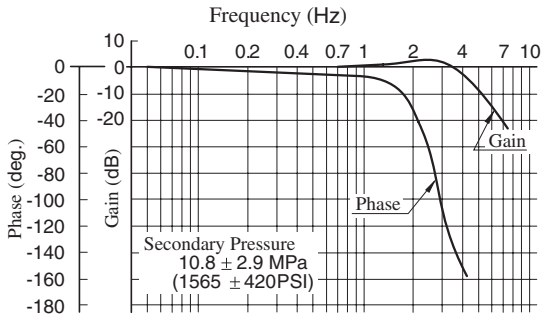

ERBG-10-C

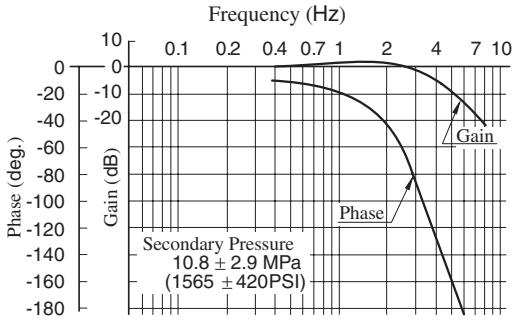

ERBG-06-H

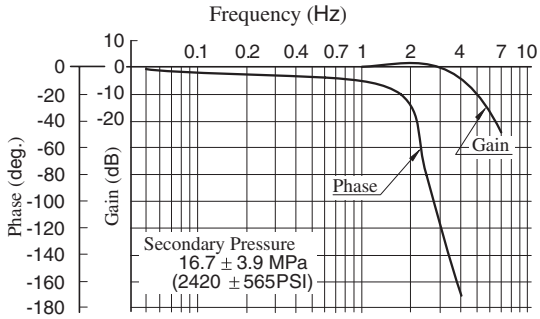

ERBG-10-H

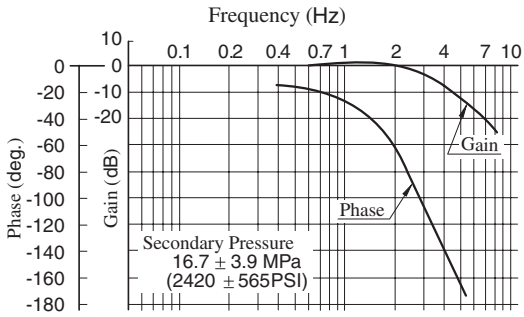

Flow Rate vs. Secondary Pressure

Viscosity : 30 mm²/s (141 SSU)

ERBG-06-B

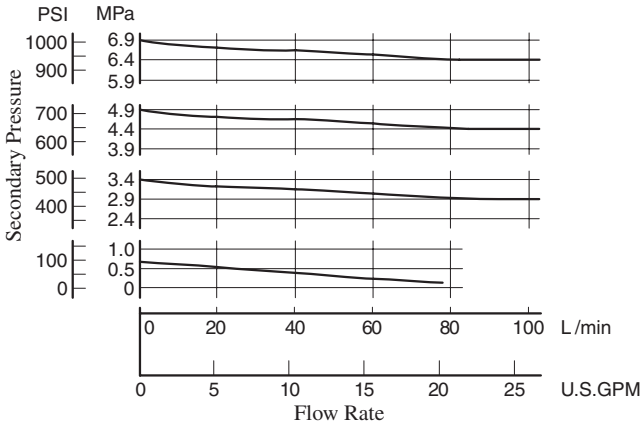

ERBG-10-B

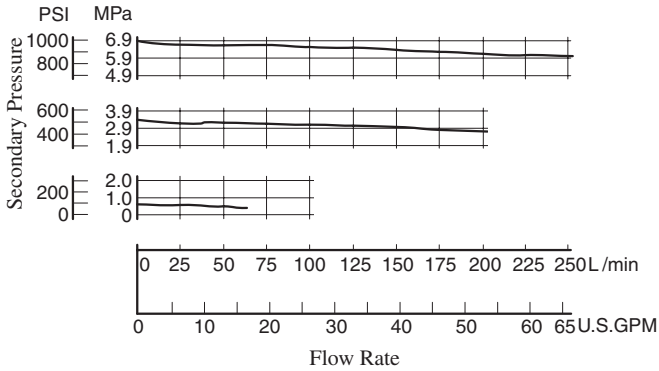

ERBG-06-C

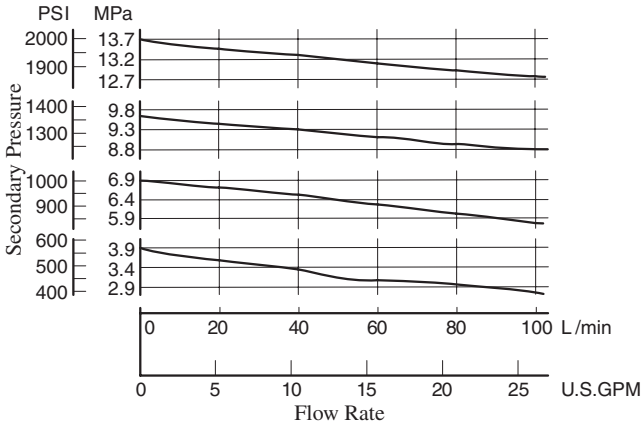

ERBG-10-C

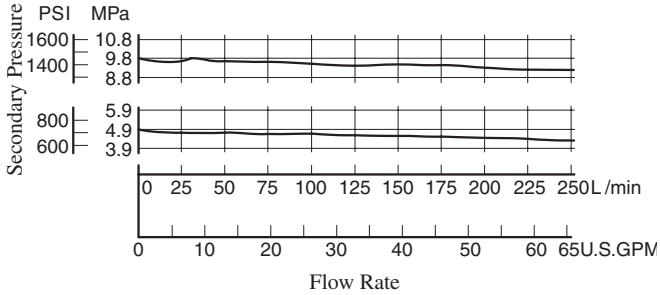

ERBG-06-H

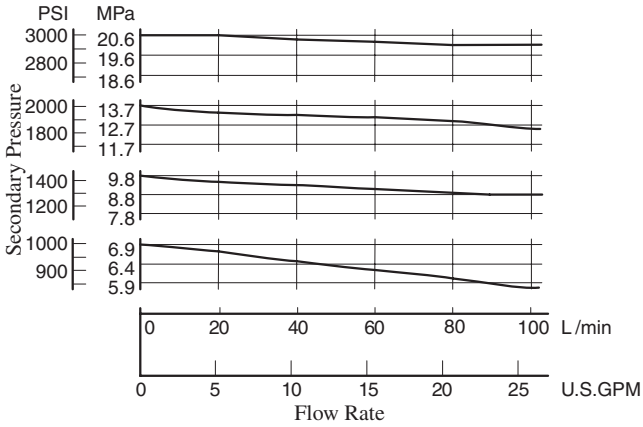

ERBG-10-H

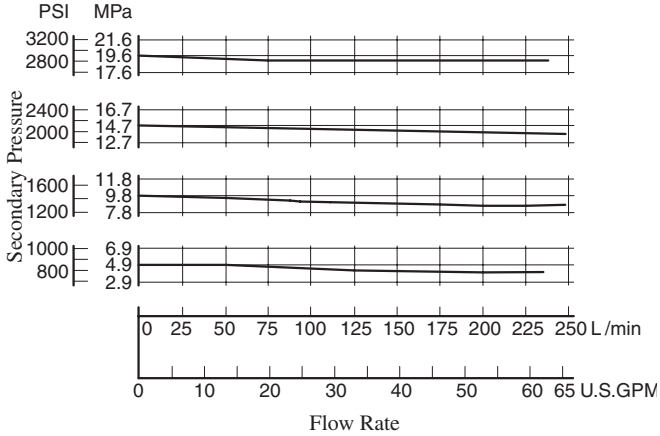

Viscosity vs. Secondary Pressure

Oil: ISO VG32

ERBG-06-B

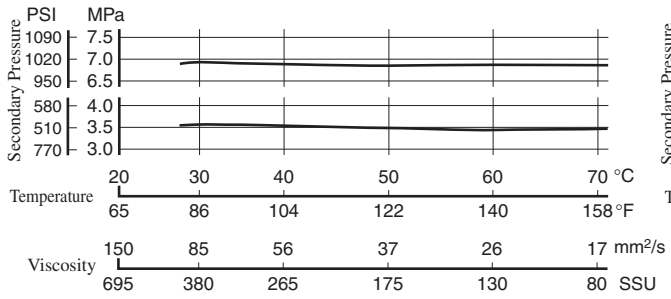

ERBG-10-B

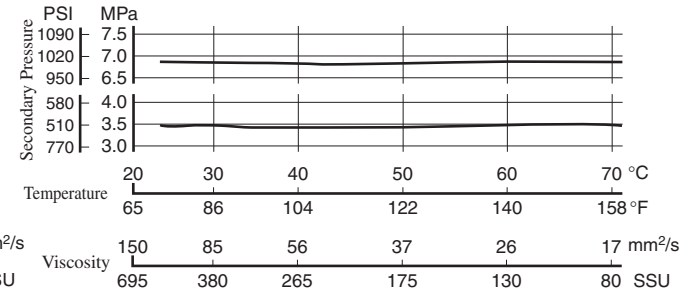

ERBG-06-C

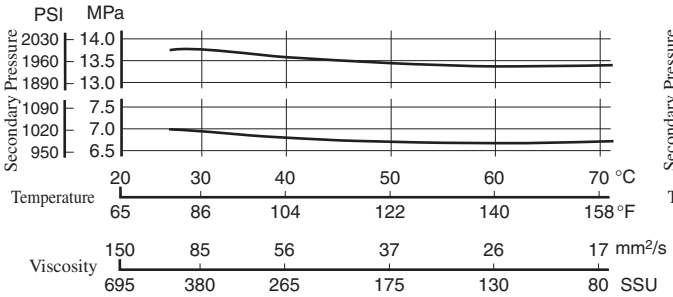

ERBG-10-C

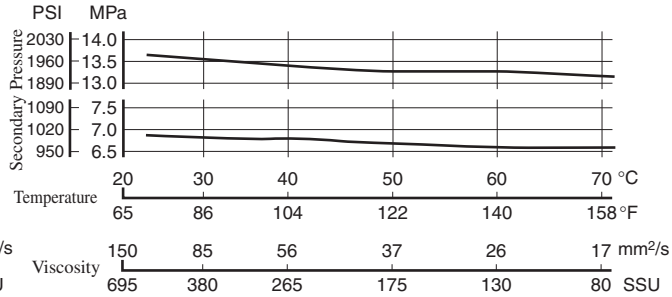

ERBG-06-H

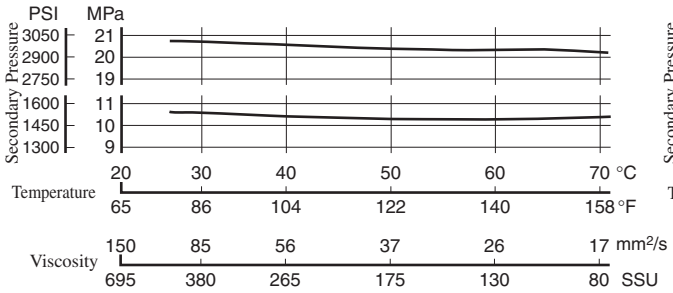

ERBG-10-H

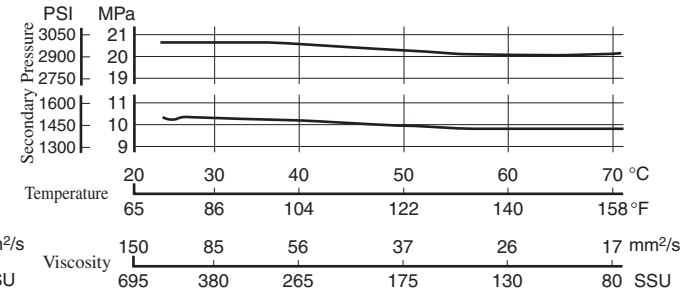

List of Seals and Pilot Valves

ERBG-$\frac{06}{10}$-∗-51/5190

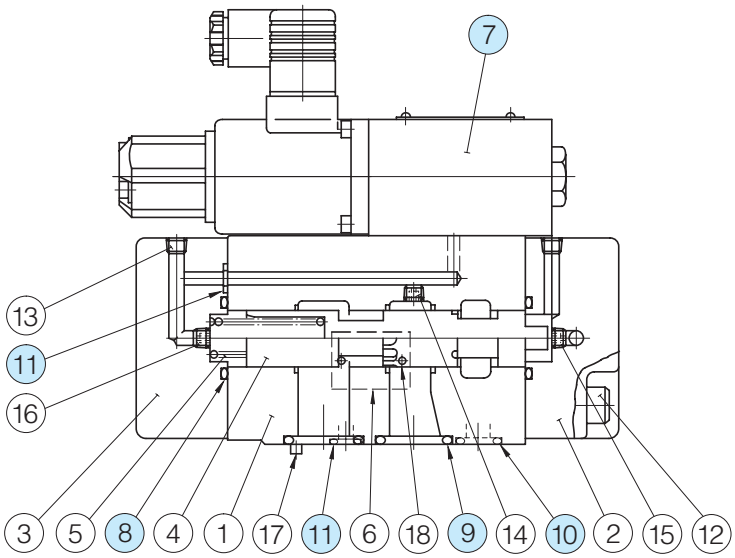

List of Seals

Item	Name of Parts	Part Numbers		Qty.
		ERBG-06	ERBG-10	
8	O-Ring	SO-NB-G30	SO-NB-P36	2
9	O-Ring	SO-NB-P28	SO-NB-P32	2
10	O-Ring	SO-NB-P14	SO-NB-P18	1
11	O-Ring	SO-NB-P9	SO-NB-P9	3

Note) When ordering seals, please specify the seal kit number from the table below. In addition to the above O-rings, seals for pilot valve are included in the seal kit.
For the details of the pilot valve seals, see page 674.

Pilot Valve

Valve Model No.	⑦ Pilot Valve Model Numbers
ERBG-06-B-51/5190	EDG-01-B-PNTN-5101
ERBG-06-C-51/5190	EDG-01-C-PNTN-5101
ERBG-06-H-51/5190	EDG-01-H-PNT15-5101
ERBG-10-B-51/5190	EDG-01-B-PNTN-5101
ERBG-10-C-51/5190	EDG-01-C-PNTN-5101
ERBG-10-H-51/5190	EDG-01-H-PNT15-5101

Note: For the details of pilot valves, refer to "Pilot Relief Valves" on page 674.

List of Seal Kits

Valve Model Numbers	Seal Kit Numbers
ERBG-06	KS-ERBG-06-51
ERBG-10	KS-ERBG-10-51

Interchangeability between Current and New Design

ERBG-06/10 series valves have changed model from 50 to 51 design in line with the model change of pilot valve (EDG-01).

Specifications and Characteristics

No change in specifications and characteristics between current and new design.

Mounting Interchangeability

There is an interchangeability in the mounting dimensions, however, the outside shape and dimensions are changed as shown below due to pilot valve improvement and other modifications.

Current: Design 50

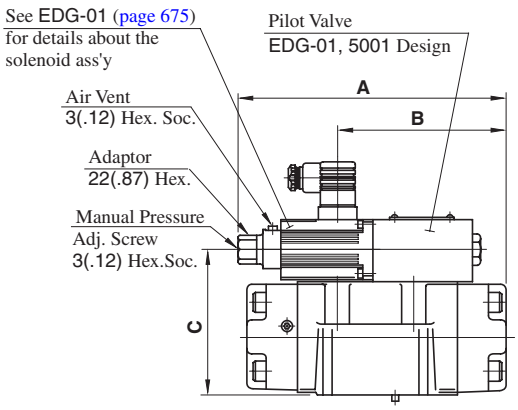

New: Design 51

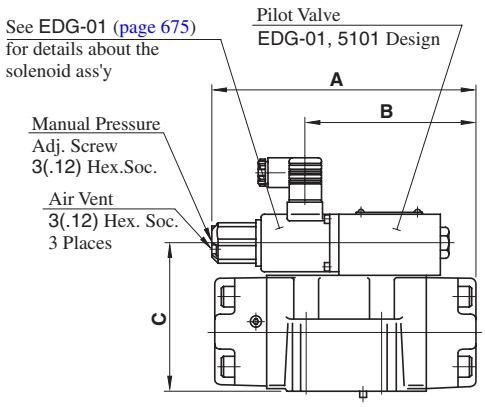

Model Numbers		A	B	C
Current	ERBG-06-∗-50/5090	214.5 (8.44)	136.5 (5.37)	115 (4.53)
New	ERBG-06-∗-51/5190	213.5 (8.41)	136.5 (5.37)	115 (4.53)
Current	ERBG-10-∗-50/5090	235.5 (9.27)	158 (6.22)	117 (4.61)
New	ERBG-10-∗-51/5190	234.5 (9.23)	158 (6.22)	117 (4.61)

DIMENSIONS IN MILLIMETRES (INCHES)

40Ω Series
Proportional Electro-Hydraulic Flow Control (and Check) Valves

Since the preselected flow rate continuously varies in proportion to the current input to the valve, the system flow rate can be remote-controlled as desired by regulating the amplifier current output. Further, since pressure and temperature compensation functions are provided, the preselected flow rate is not affected by pressure (load) or temperature (fluid viscosity).
This valve is ideal for use where actuator startup, stop, and speed changes are to be implemented without producing a shock. Note that this valve is used in conjunction with the applicable power amplifier.

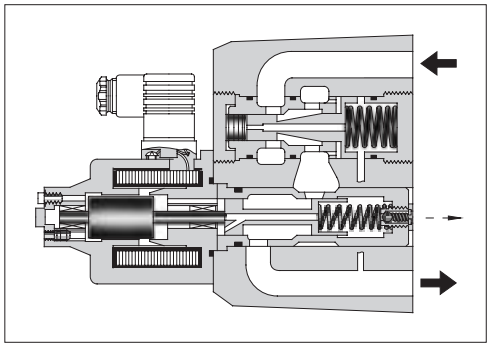

Specifications

Description \ Model No.	EFG EFCG-02-10 30	EFG EFCG-03-60 125	EFG EFCG-06-250	EFG EFCG-10-500
Max. Operating Pres. MPa (PSI)	20.6 (3000)	20.6 (3000)	20.6 (3000)	20.6 (3000)
Metred Flow Adjustment Range L/min (U.S.GPM)	10: 0.3-10 (.08-2.6) 30: 0.3-30 (.08-7.9)	60: 2-60 (.53-15.9) 125: 2-125 (.53-33)	3-250 (.79-66)	5-500 (1.32-132)
Min. Differential Pres.★ MPa (PSI)	0.6 (90)	1.0 (145)	1.3 (190)	2.0 (290)
Free Flow (EFCG Models Only.) L/min (U.S.GPM)	40 (10.6)	130 (34.3)	280 (74.0)	550 (145)
Rated Current	600 mA	600 mA	600 mA	700 mA
Coil Resistance	45 Ω	45 Ω	45 Ω	45 Ω
Hysteresis	5% or less	7% or less	7% or less	7% or less
Repeatability	1% or less	1% or less	1% or less	1% or less
Approx. Mass kg (lbs.)	8.2 (18.1)	12.5 (27.6)	25 (55.1)	51 (113)

★Min. pressure difference required between inlet and outlet ports to maintain function as pressure compensator.

Graphic Symbols

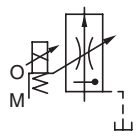

EFG-∗

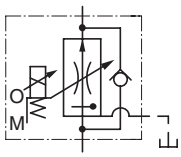

EFCG-∗

Model Number Designation

F-	EFC	G	-02	-10	-31	∗
Special Seals	Series Number	Type of Mounting	Valve Size	Max. Metred Flow L/min (U.S.GPM)	Design Number	Design Standards
F: Special Seals for Phosphate Ester Type Fluid (Omit if not required)	**EF**: Proportional Electro-Hydraulic Flow Control Valve **EFC**: Proportional Electro-Hydraulic Flow Control and Check Valve	**G**: Sub-plate Mounting	**02**	**10**: 10 (2.6) **30**: 30 (7.9)	**31**	Refer to ★
			03	**60**: 60 (15.9) **125**: 125 (33)	**26**	
			06	**250**: 250 (66)	**22**	
			10	**500**: 500 (132)	**11**	

Note: If you are going to use the model with pressure compensator stroke adjustment screw, consult your Yuken representative in advance.
★ Design Standards: None..... Japanese Standard "JIS" and European Design Standard
90 ..... N. American Design Standard

Attachment

Mounting Bolts

Valve Model Numbers	Socket Head Cap Screw		Qty.
	Japanese Std. "JIS" and European Design Std.	N. American Design Std.	
EF∗G-02	M8 × 75 Lg.	5/16-18 UNC × 3 Lg.	4
EF∗G-03	M10 × 100 Lg.	3/8-16 UNC × 4 Lg.	4
EF∗G-06	M16 × 130 Lg.	5/8-11 UNC × 5 Lg.	4
EF∗G-10	M20 × 160 Lg.	3/4-10 UNC × 6-1/2 Lg.	4

Applicable Power Amplifiers

For stable performance, it is recommended that Yuken's applicable power amplifiers be used (for details see page 772).

Model Numbers : AME-D-∗-40
AME-DF-S- ∗-22
AME-T-S- ∗-22

Sub-plate

Valve Model Numbers	Japanese Standard "JIS"		European Design Standard		N. American Design Standard		Approx. Mass kg (lbs.)
	Sub-plate Model Numbers	Thread Size	Sub-plate Model Numbers	Thread Size	Sub-plate Model Numbers	Thread Size	
EFG EFCG-02	EFGM-02X-20	Rc 3/8	EFGM-02X-2080	3/8 BSP.F	EFGM-02X-2090	3/8 NPT	2.3 (5.1)
	EFGM-02Y-20	Rc 1/2	EFGM-02Y-2080	1/2 BSP.F	EFGM-02Y-2090	1/2 NPT	3.1 (6.8)
EFG EFCG-03	EFGM-03Y-20	Rc 3/4	EFGM-03Y-2080	3/4 BSP.F	EFGM-03Y-2090	3/4 NPT	5.7 (12.6)
	EFGM-03Z-20	Rc 1	EFGM-03Z-2080	1 BSP.F	EFGM-03Z-2090	1 NPT	5.6 (12.3)
EFG EFCG-06	EFGM-06X-20	Rc 1	EFGM-06X-2080	1 BSP.F	EFGM-06X-2090	1 NPT	12.5 (27.6)
	EFGM-06Y-20	Rc 1-1/4	EFGM-06Y-2080	1-1/4 BSP.F	EFGM-06Y-2090	1-1/4 NPT	16 (35.3)
EFG EFCG-10	EFGM-10Y-10★	1-1/2, 2 Flange Mounting	EFGM-10Y-1080★	1-1/2, 2 Flange Mounting	EFGM-10Y-1090★	1-1/2, 2 Flange Mounting	37 (81.6)

● Sub-plates are available. Specify the sub-plate model number from the table above. When sub-plates are not used, the mountingsurface should have a good machined finish.

★ When ordering the EFGM-10Y, see Type F3 Pipe Flange Kits on page 821 and order an appropriate pipe flange kit also.

Models with Pressure Compensator Stroke Adjustment Screw

A models with pressure compensator stroke adjustment screw is optionally available to minimize the actuator protrusion (jumping) at startup. For the details, please consult us or your Yuken distributors.

Instructions

Drain Back Pressure

Check that the drain back pressure does not exceed 0.2 MPa (29 PSI).

Models with Check Valve

A models with check valve makes it possible to obtain a free flow in the direction opposite that of the controlled flow without respect to the input current.

EFG/EFCG-02-∗-31/3190
EFG/EFCG-03-∗-26/2690

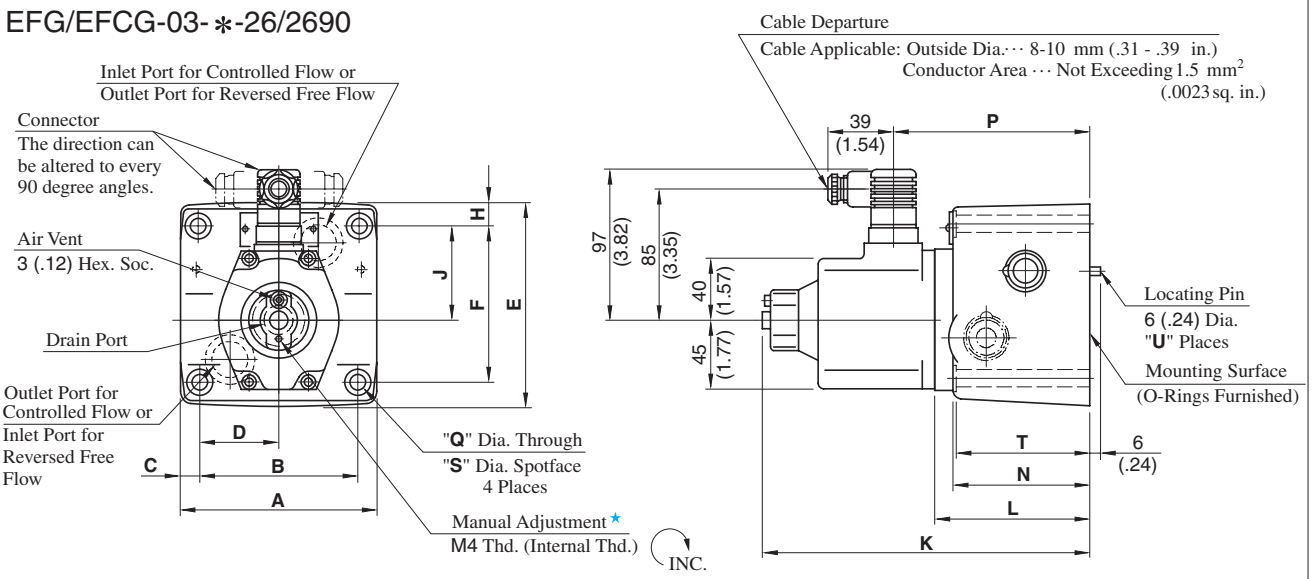

★ Manual adjustment can be done by screwing for example an M4×20 L screw in the M4 thread or pushing in a rod etc. there.

Model Numbers	Dimensions mm (Inches)															U
	A	B	C	D	E	F	H	J	K	L	N	P	Q	S	T	
EF∗G-02	96 (3.78)	76.2 (3.00)	9.9 (.39)	38.1 (1.50)	106 (4.17)	82.6 (3.25)	11.7 (.46)	46.3 (1.82)	195 (7.68)	81 (3.19)	66 (2.60)	108 (4.25)	8.8 (.35)	14 (.55)	65 (2.56)	1
EF∗G-03	125 (4.92)	101.6 (4.00)	11.7 (.46)	50.8 (2.00)	130 (5.12)	101.6 (4.00)	14.2 (.56)	61.8 (2.43)	212 (8.35)	98 (3.86)	85 (3.35)	125 (4.92)	11 (.43)	17.5 (.69)	84 (3.31)	2

EFG/EFCG-06-250-22/2290
EFG/EFCG-10-500-11/1190

DIMENSIONS IN MILLIMETRES (INCHES)

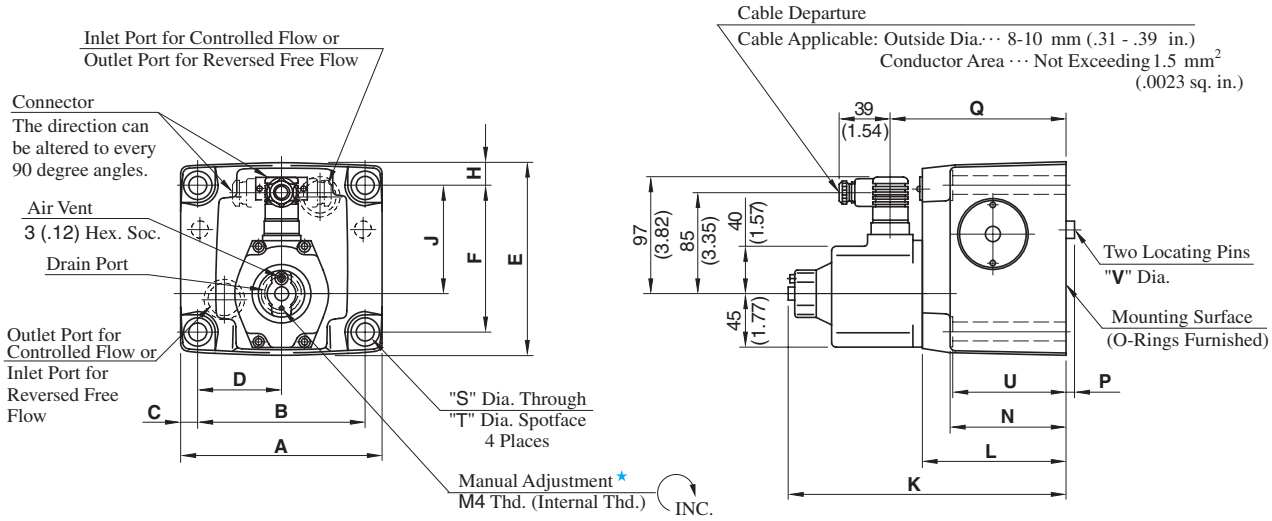

★ Manual adjustment can be done by screwing for example an M4×20 L screw in the M4 thread or pushing in a rod etc. there.

Model Numbers	Dimensions mm (Inches)																
	A	B	C	D	E	F	H	J	K	L	N	P	Q	S	T	U	V
EF∗G-06	180 (7.09)	146.1 (5.75)	17 (.67)	73.1 (2.88)	174 (6.85)	133.4 (5.25)	20.3 (.80)	99 (3.90)	244 (9.61)	130 (5.12)	105 (4.13)	7 (.28)	157 (6.18)	17.5 (.69)	26 (1.02)	103.5 (4.07)	16 (.63)
EF∗G-10	244 (9.61)	196.9 (7.75)	23.5 (.93)	98.5 (3.88)	228 (8.98)	177.8 (7.00)	25 (.98)	144.5 (5.69)	274 (10.79)	160 (6.30)	137 (5.93)	10 (.39)	187 (7.36)	21.5 (.85)	32 (1.26)	135 (5.31)	18 (.71)

Sub-plate

EFGM-02X/02Y-20/2080/2090

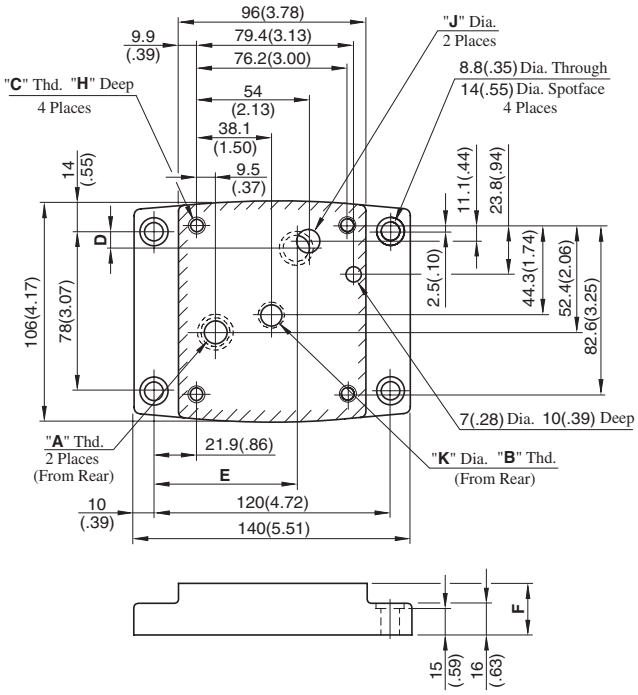

Sub-plate Model Numbers	Thread Size		
	"A" Thd.	"B" Thd.	"C" Thd.
EFGM-02X-20	Rc 3/8	Rc 1/4	M8
EFGM-02Y-20	Rc 1/2		
EFGM-02X-2080	3/8 BSP.F	1/4 BSP.F	
EFGM-02Y-2080	1/2 BSP.F		
EFGM-02X-2090	3/8 NPT	1/4 NPT	5/16-18 UNC
EFGM-02Y-2090	1/2 NPT		

Sub-plate Model Numbers	Dimensions mm (Inches)					
	D	E	F	H	J	K
EFGM-02X-20	8.6 (.34)	75.9 (2.99)	25 (.98)	14 (.55)	14 (.55)	11 (.43)
EFGM-02Y-20	11.5 (.45)	72.9 (2.87)	35 (1.38)			
EFGM-02X-2080	8.6 (.34)	75.9 (2.99)	25 (.98)		15.2 (.60)	11.7 (.46)
EFGM-02Y-2080	11.5 (.45)	72.9 (2.87)	35 (1.38)		15 (.59)	
EFGM-02X-2090	8.6 (.34)	75.9 (2.99)	25 (.98)	18 (.17)	14 (.55)	11 (.43)
EFGM-02Y-2090	11.5 (.45)	72.9 (2.87)	35 (1.38)			

DIMENSIONS IN MILLIMETRES (INCHES)

EFGM-03Y/03Z-20/2080/2090

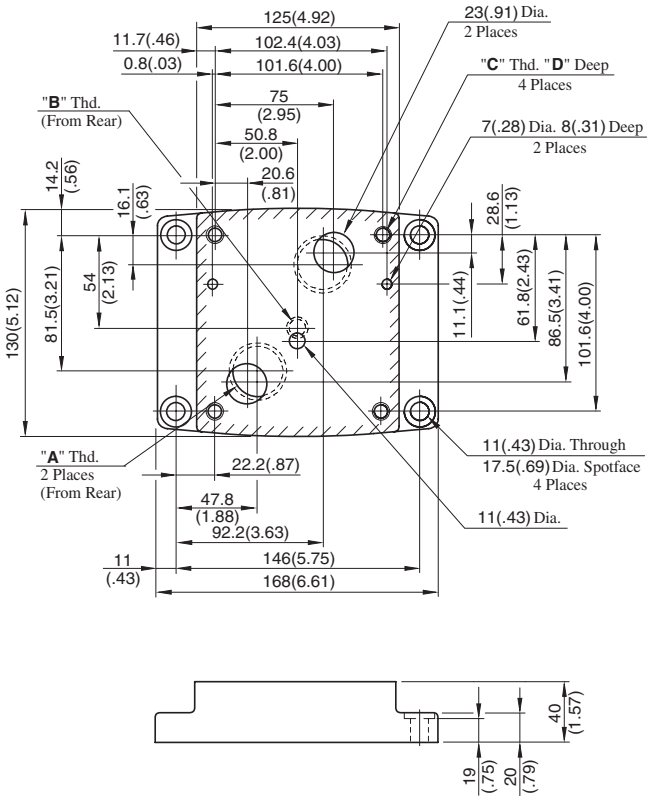

Sub-plate Model Numbers	Thread Size			D mm(in.)
	"A" Thd.	"B" Thd.	"C" Thd.	
EFGM-03Y-20	Rc 3/4	Rc 1/4	M10	18 (.71)
EFGM-03Z-20	Rc 1			
EFGM-03Y-2080	3/4 BSP.F	1/4 BSP.F		
EFGM-03Z-2080	1 BSP.F			
EFGM-03Y-2090	3/4 NPT	1/4 NPT	3/8-16 UNC	21 (.83)
EFGM-03Z-2090	1 NPT			

Sub-plate
EFGM-06X/06Y-20/2080/2090

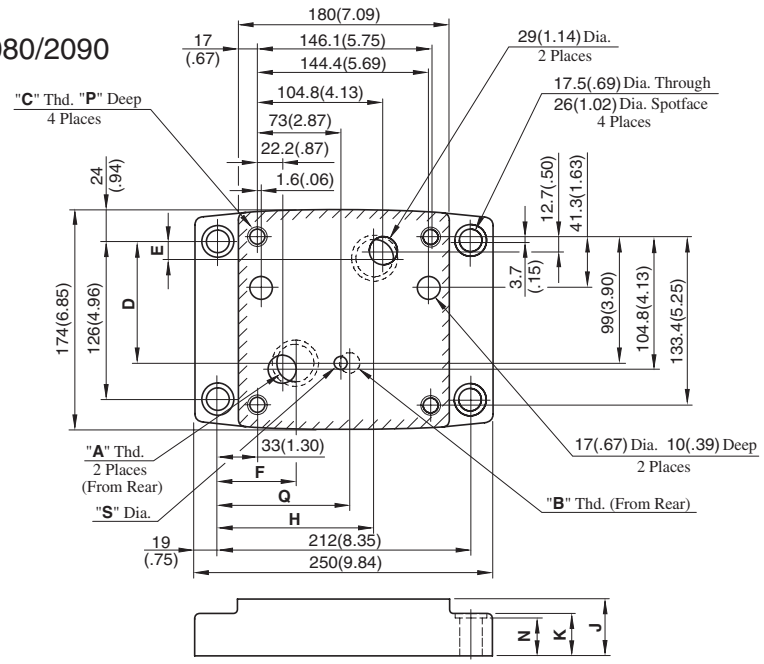

Sub-plate Model Numbers	Thread Size			Dimensions mm (Inches)									
	"A" Thd.	"B" Thd.	"C" Thd.	D	E	F	H	J	K	N	P	Q	S
EFGM-06X-20	Rc 1	Rc 3/8	M16	101.1 (3.98)	14.3 (.56)	55.2 (2.17)	137.8 (5.43)	45 (1.77)	35 (1.38)	34 (1.34)	30 (1.18)	106 (4.17)	14 (.55)
EFGM-06Y-20	Rc 1-1/4			95.3 (3.75)	19.3 (.76)	67 (2.64)	132 (5.20)	60 (2.36)	40 (1.57)	39 (1.54)			
EFGM-06X-2080	1 BSP.F	3/8 BSP.F		101.1 (3.98)	14.3 (.56)	55.2 (2.17)	137.8 (5.43)	45 (1.77)	35 (1.38)	34 (1.34)		116 (4.57)	15.2 (.60)
EFGM-06Y-2080	1-1/4 BSP.F			95.3 (3.75)	19.3 (.76)	67 (2.64)	132 (5.20)	60 (2.36)	40 (1.57)	39 (1.54)			15 (.59)
EFGM-06X-2090	1 NPT	3/8 NPT	5/8-11 UNC	101.1 (3.98)	14.3 (.56)	55.2 (2.17)	137.8 (5.43)	45 (1.77)	35 (1.38)	34 (1.34)	35 (1.38)	106 (4.17)	14 (.55)
EFGM-06Y-2090	1-1/4 NPT			95.3 (3.75)	19.3 (.76)	67 (2.64)	132 (5.20)	60 (2.36)	40 (1.57)	39 (1.54)			

DIMENSIONS IN MILLIMETRES (INCHES)

EFGM-10Y-10/1080/1090

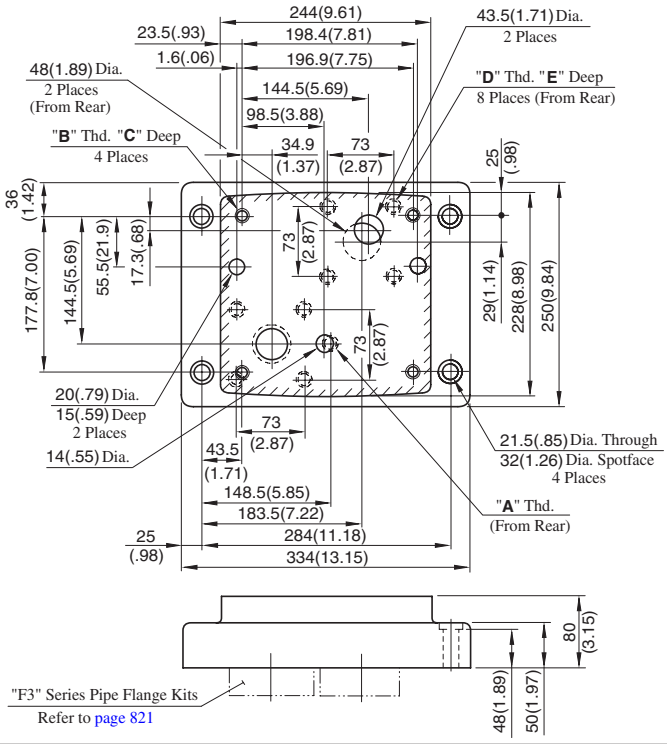

Sub-plate Model Numbers	Thread Size		
	"A" Thd.	"B" Thd.	"D" Thd.
EFGM-10Y-10	Rc 3/8	M20	M16
EFGM-10Y-1080	3/8 BSP.F		
EFGM-10Y-1090	3/8 NPT	3/4-10 UNC	5/8-11 UNC

Sub-plate Model Numbers	mm (Inches)	
	C	E
EFGM-10Y-10	30 (1.18)	30 (1.18)
EFGM-10Y-1080		
EFGM-10Y-1090	34 (1.34)	35 (1.38)

Input Current vs. Flow

Viscosity: 30 mm²/s
(141 SSU)

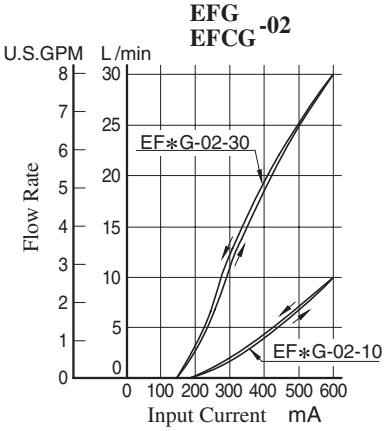

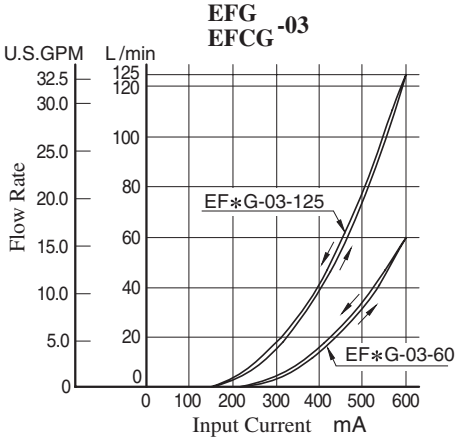

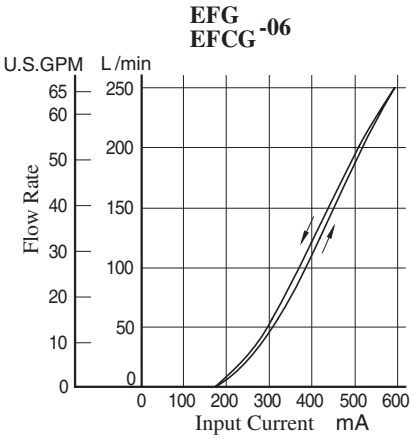

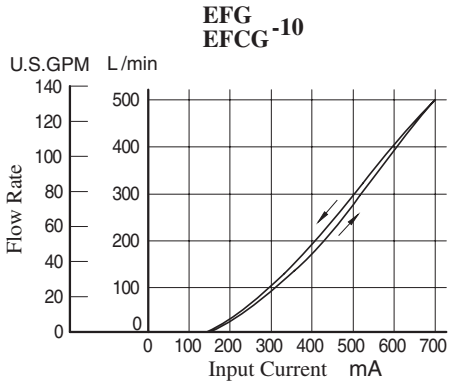

Differential Pressure vs. Metred Flow

Viscosity: 30 mm²/s
(141 SSU)

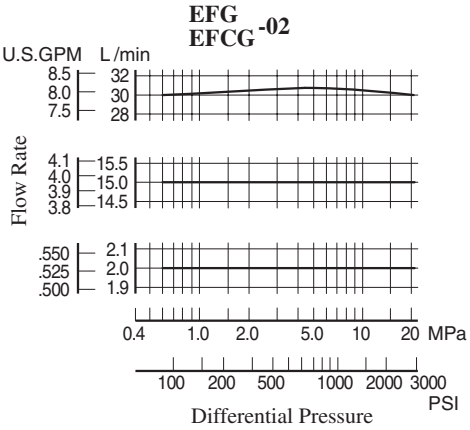

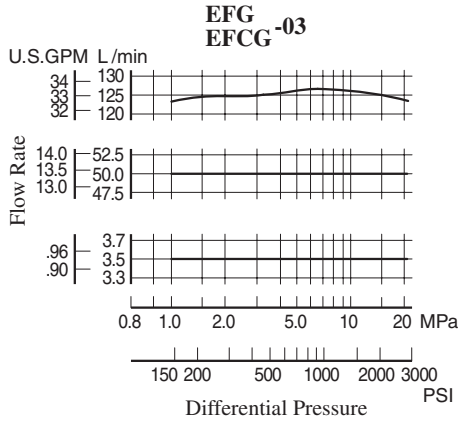

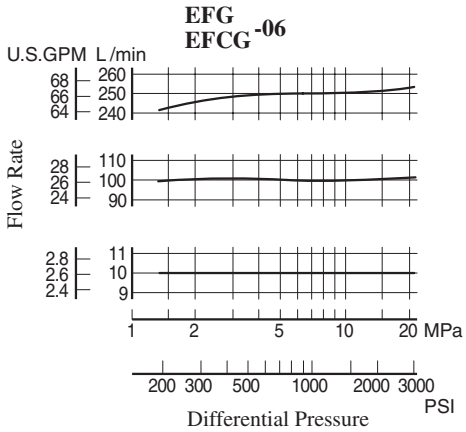

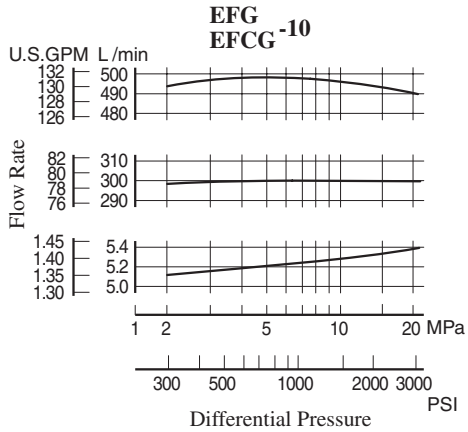

Step Response

Viscosity: 30 mm²/s (141 SSU)

These characteristics have been obtained by measuring on each valve. Therefore, they may vary according to a hydraulic circuit to be used.

EFG EFCG -02

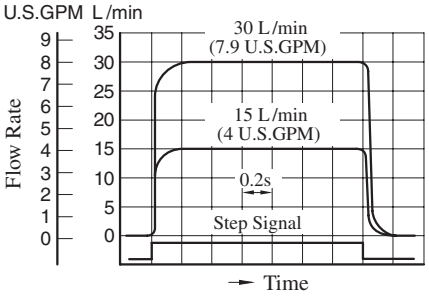

EFG EFCG -03

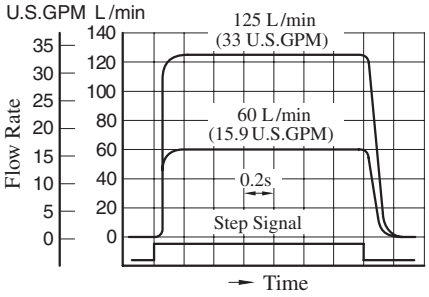

EFG EFCG -06

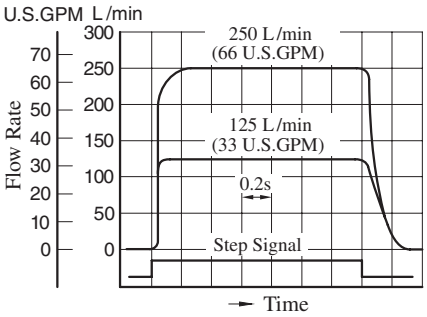

EFG EFCG -10

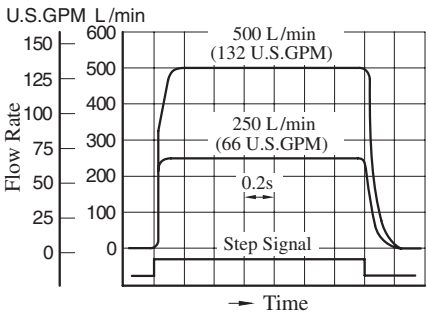

Frequency Response

Viscosity: 30 mm²/s (141 SSU)

EFG EFCG -02

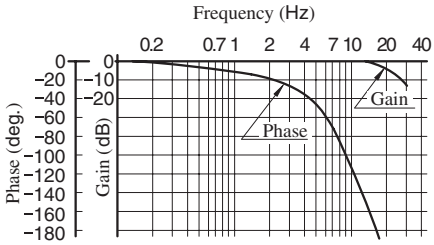

Input Current : 440 ± 100 mA
Pressure : 6.9 MPa (1000 PSI)

EFG EFCG -03

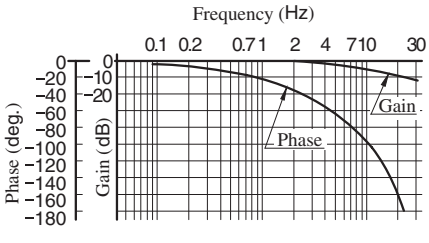

Input Current : 460 ± 70 mA
Pressure : 6.9 MPa (1000 PSI)

EFG EFCG -06

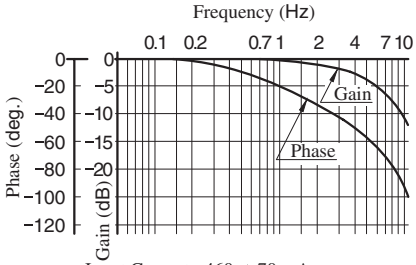

Input Current : 460 ± 70 mA
Pressure : 6.9 MPa (1000 PSI)

EFG EFCG -10

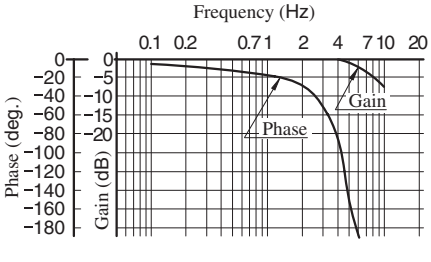

Input Current : 475 ± 125 mA
Pressure : 6.9 MPa (1000 PSI)

Viscosity vs. Flow

EFG EFCG -02

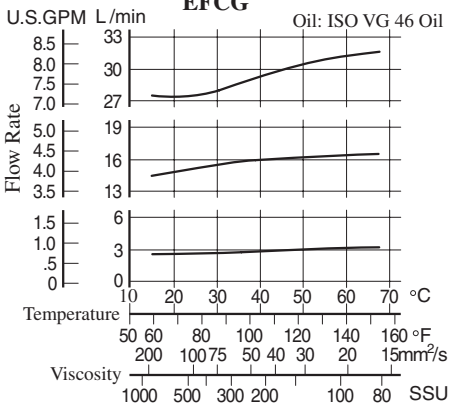

EFG EFCG -03

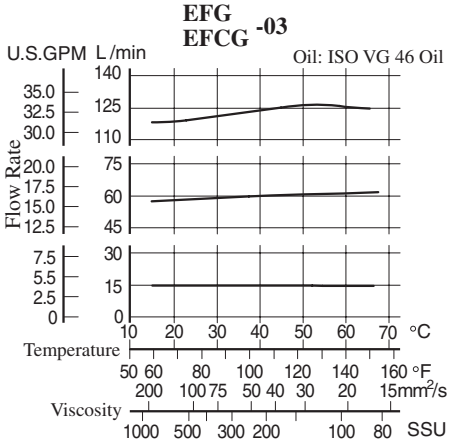

EFG EFCG -06

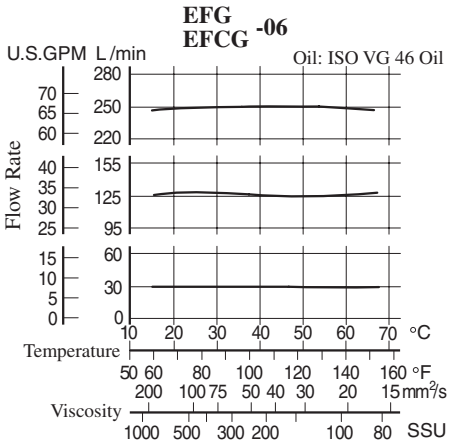

EFG EFCG -10

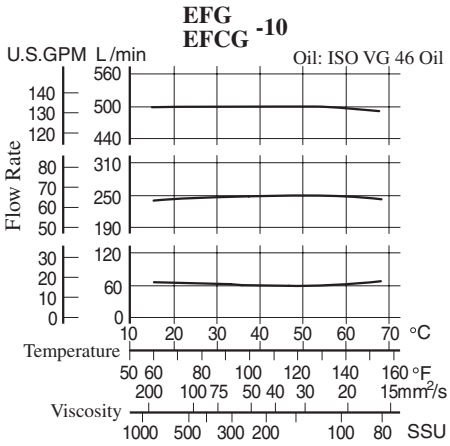

Pressure Drop for Reversed Free Flow (Only for "EFCG" Models)

Oil Viscosity: 35 mm²/s (164 SSU)
Specific Gravity: 0.850

EFCG-02

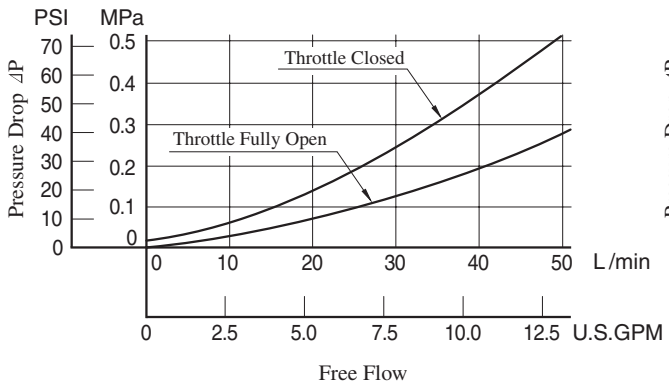

EFCG-03

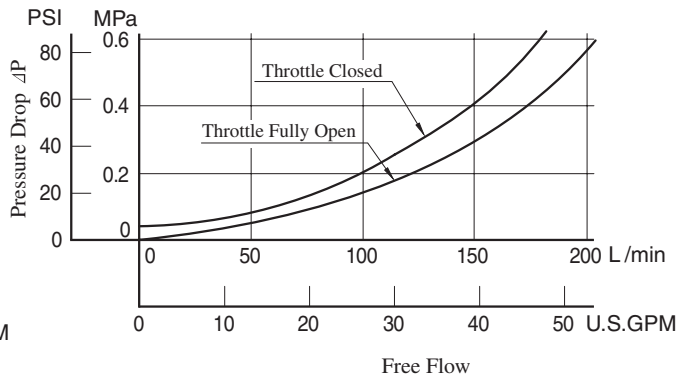

EFCG-06

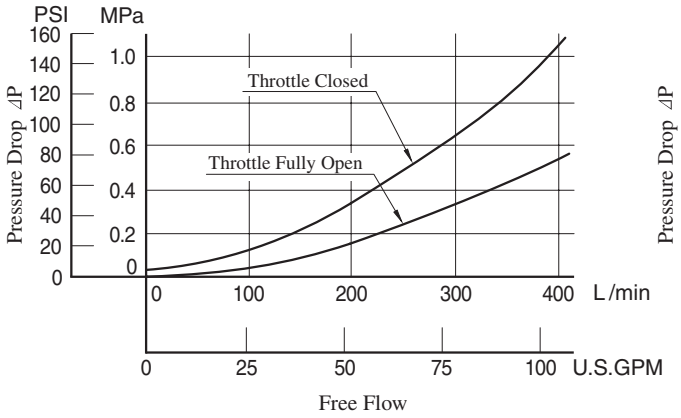

EFCG-10

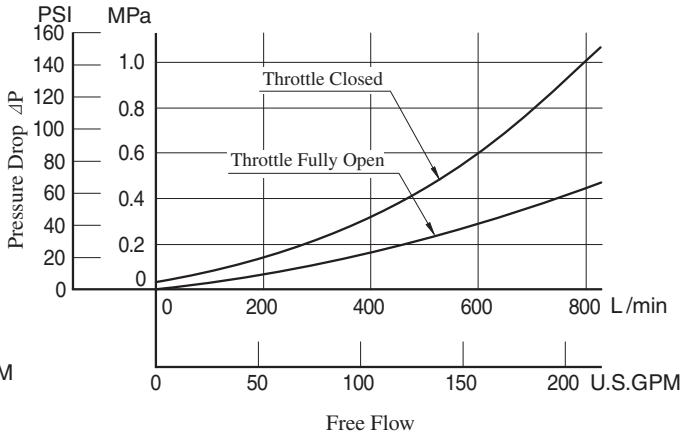

- For any other viscosity, multiply the factors in the table below.

Viscosity	mm²/s	20	40	60	80	100
	SSU	98	186	278	371	464
Factor		0.87	1.03	1.14	1.23	1.30

- For any other specific gravity (G'), the pressure drop (⊿P') may be obtained from the formula below.
  ⊿P'=⊿P (G'/0.850)

List of Seals and Solenoid Ass'y

EFG/EFCG-02- ∗-31/3190
EFG/EFCG-03- ∗-26/2690

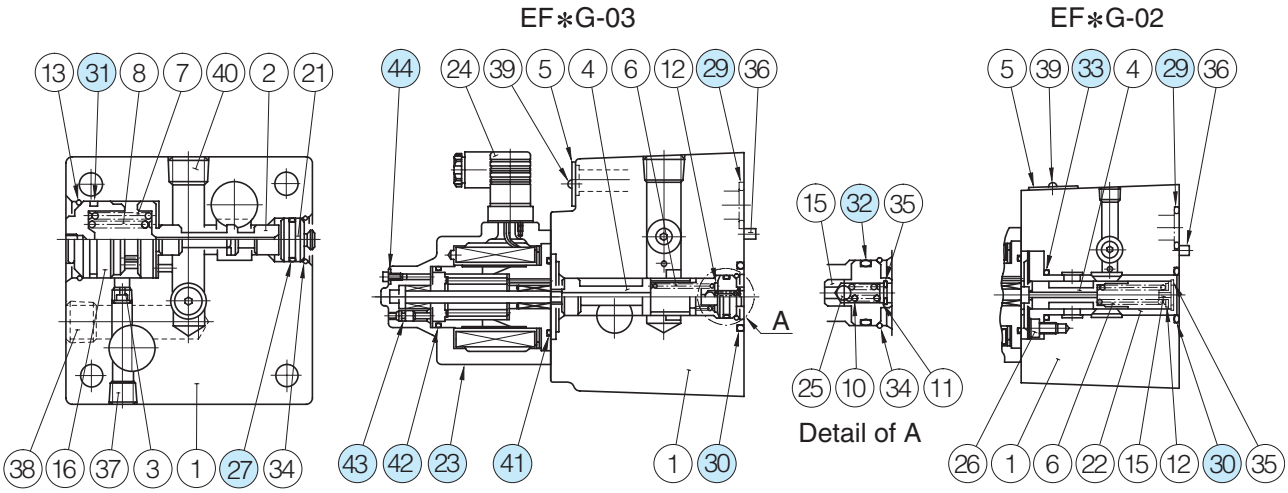

With Check Valve (EFCG-02, 03)

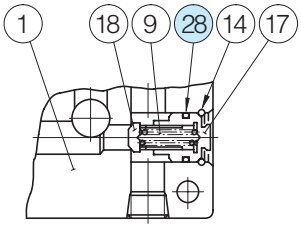

List of Seals and Solenoid Ass'y

Item	Name of Parts	Part Numbers		Qty.
		EF∗G-02	EF∗G-03	
23	Solenoid Ass'y	E321-45-20	E321-45-20	1
27	O-Ring	SO-NB-P18	SO-NB-P18	1
28	O-Ring	SO-NB-P10A	SO-NB-P21	1
29	O-Ring	SO-NB-P18	SO-NB-P28	2
30	O-Ring	SO-NB-P22	SO-NB-P31	1
31	O-Ring	SO-NB-G25	SO-NB-G35	1
32	O-Ring	—	SO-NB-P18	1
33	O-Ring	SO-NB-P22	—	1
41	O-Ring	SO-NB-G45	SO-NB-G45	1
42	O-Ring	SO-NB-G35	SO-NB-G35	1
43	O-Ring	SO-NA-P4	SO-NA-P4	1
44	Fastener Seal	SG-FCF-4	SG-FCF-4	1

Note 1: O-rings (Item 41, 42, 43) and the fastener seal (Item 44) are included in the solenoid assembly.
2: The connector assembly GDM-211-B-11 (Item 24) is not included in the solenoid assembly.
3: When ordering seals, please specify the seal kit number from the table right.

List of Seal Kits

Valve Model Numbers	Seal Kit Numbers
EFG-02-∗-31∗	KS-EFG-02-31
EFCG-02-∗-31∗	KS-EFCG-02-31
EFG-03-∗-26∗	KS-EFG-03-26
EFCG-03-∗-26∗	KS-EFCG-03-26

List of Seals and Solenoid Ass'y

EFG/EFCG-06-250-22/2290
EFG/EFCG-10-500-11/1190

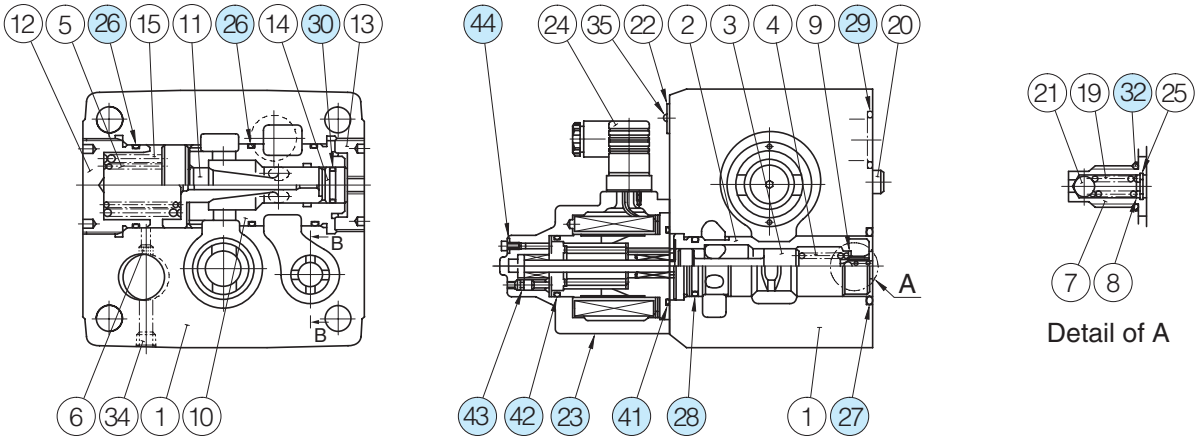

With Check Valve (EFCG-06, 10)

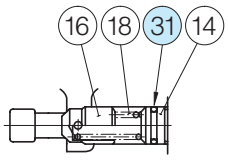

Section B-B

List of Seals and Solenoid Ass'y

Item	Name of Parts	Part Numbers		Qty.
		EF∗G-06	EF∗G-10	
23	Solenoid Ass'y	E321-45-20	E321-45-20	1
26	O-Ring	SO-NB-P50	SO-NB-G75	3
27	O-Ring	SO-NB-P44	SO-NB-G60	1
28	O-Ring	SO-NB-P34	SO-NB-P50	1
29	O-Ring	SO-NB-P32	SO-NB-P48	2
30	O-Ring	SO-NB-P21	SO-NB-P34	1
31	O-Ring	SO-NB-P21	SO-NB-P26	1
32	O-Ring	SO-NA-P10	SO-NA-P10	1
41	O-Ring	SO-NB-G45	SO-NB-G45	1
42	O-Ring	SO-NB-G35	SO-NB-G35	1
43	O-Ring	SO-NA-P4	SO-NA-P4	1
44	Fastener Seal	SG-FCF-4	SG-FCF-4	1

Note1: O-rings (Item 41, 42, 43) and the fastener seal (Item 44) are included in the solenoid assembly.
2: The connector assembly GDM-211-B-11 (Item 24) is not included in the solenoid assembly.
3: When ordering seals, please specify the seal kit number from the table right.

List of Seal Kits

Valve Model Numbers	Seal Kit Numbers
EFG-06-250-22∗	KS-EFG-06-22
EFCG-06-250-22∗	KS-EFCG-06-22
EFG-10-500-11∗	KS-EFG-10-11
EFCG-10-500-11∗	KS-EFCG-10-11

10Ω Series
Proportional Electro-Hydraulic Flow Control (and Check) Valves

Since the preselected flow rate continuously varies in proportion to the current input to the valve, the system flow rate can be remote-controlled as desired by regulating the current output from the amplifier. Further, since the pressure and temperature compensation functions are provided, the preselected flow rate is not be affected by pressure (load) or temperature (fluid viscosity). This valve is ideal for use where actuator startup, stop, and speed changes are to be implemented without producing a shock. Note that this valve is used in conjunction with the applicable power amplifier.

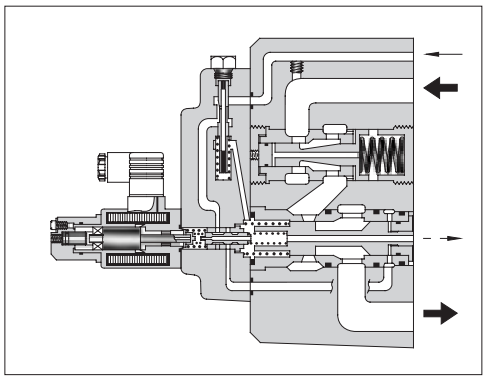

Specifications

Description \ Model No.		EFG EFCG -03- 60 125	EFG EFCG -06-250
Max. Operating Pressure MPa (PSI)		20.6 (3000)	24.5 (3550)
Metred Flow Adj. Range L/min (U.S.GPM)		60: 1-60 (.26-15.9) 125: 1-125 (.26-33)	2.5-250 (.66-66)
Min. Differential Pressure ★1 MPa (PSI)		1.0 (145)	1.0 (145)
Free Flow (EFCG Models Only) L/min (U.S.GPM)		130 (34.3)	280 (74.0)
Min. Pilot Pressure ★2 MPa (PSI)		1.0 (145)	1.5 (220)
Pilot Flow L/min (U.S.GPM)	at Normal	0.5 (.13)	1 (.26)
	at Transition	2.6 (.69)	4 (1.06)
Rated Current		780 mA	820 mA
Coil Resistance		10 Ω	10 Ω
Hysteresis		3% or less	3% or less
Repeatability		1% or less	1% or less
Approx. Mass kg (lbs.)		10 (22.1)	25 (55.1)

★1. Min pressure difference required between inlet and outlet ports to maintain function as pressure compensator.
★2. The minimum required value for the external pilot type.

Graphic Symbols

Internal Pilot | External Pilot

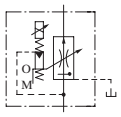

EFG- ∗

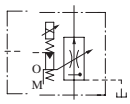

EFG- ∗

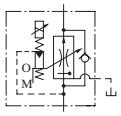

EFCG- ∗

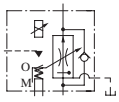

EFCG- ∗

Model Number Designation

F-	EFC	G	-03	-125	-E	-51	∗
Special Seals	Series Number	Type of Mounting	Valve Size	Max. Metred Flow L/min (U.S.GPM)	Pilot Connection	Design Number	Design Standards
F: Special Seals for Phosphate Ester Type Fluid (Omit if not required)	**EF**: Proportional Electro-Hydraulic Flow Control Valve **EFC**: Proportional Electro-Hydraulic Flow Control and Check Valve	**G**: Sub-plate Mounting	**03**	**60**: 60 (15.9) **125**: 125 (33)	**None**: Internal Pilot **E**: External Pilot	**51**	Refer to ★
			06	**250**: 250 (66)		**51**	

★ Design Standards: None..... Japanese Standard "JIS" and European Design Standard
90 ..... N. American Design Standard

Attachment

Mounting bolts

Valve Model Numbers	Socket Head Cap Screw		Qty.
	Japanese Std. "JIS" and European Design Std.	N. American Design Std.	
EF∗G-03	M10 × 80 Lg.	3/8-16 UNC × 3-1/4 Lg.	4
EF∗G-06	M16 × 130 Lg.	5/8-11 UNC × 5 Lg.	4

Applicable Power Amplifiers

For stable performance, it is recommended that Yuken's applicable power amplifiers be used (for details see page 767, 771, 780).

Model Numbers: AME-D-10-∗-20
AME-D2-1010-11
SK1022-∗-∗-11
SK1015-11 (For DC power supply)
AMN-D-10 (For DC power supply)

Sub-plate

Valve Model Numbers	Japanese Standard "JIS"		European Design Standard		N. American Design Standard		Approx. Mass kg (lbs.)
	Sub-plate Model Numbers	Thread Size	Sub-plate Model Numbers	Thread Size	Sub-plate Model Numbers	Thread Size	
EFG EFCG-03	EFGM-03Y-30	Rc 3/4	EFGM-03Y-3080	3/4 BSP.F	EFGM-03Y-3090	3/4 NPT	5.7 (12.6)
	EFGM-03Z-30	Rc 1	EFGM-03Z-3080	1 BSP.F	EFGM-03Z-3090	1 NPT	5.6 (12.3)
EFG EFCG-06	EFGM-06X-30	Rc 1	EFGM-06X-3080	1 BSP.F	EFGM-06X-3090	1 NPT	12.5 (27.6)
	EFGM-06Y-30	Rc 1-1/4	EFGM-06Y-3080	1-1/4 BSP.F	EFGM-06Y-3090	1-1/4 NPT	16 (35.3)

● Sub-plates are available. Specify the sub-plate model number from the tabel above. When sub-ptates are not used, the mounting surface should have a good machined finish.

Instructions

Drain Back Pressure

Check that the drain back pressure dose not exceed 0.2 MPa (29 PSI).

Pilot Type Selection

This valve is constructed so as to operate at a pre-determined pilot pressure. For the 03, a pilot pressure of 1 MPa (145 PSI) or higher is required. For the 06, the requied pilot pressure is 1.5 MPa (220 PSI) or higher.
To obtain such a required pilot pressure, select the pilot type according to the circuit examples on the right.

①/②
Use the external pilot type (pilot connection code: E) whether a metre-in or metre-out circuit is employed.
③
Use the internal pilot type (pilot connection code: None)
④
Use the external pilot type (pilot connection code: E)

[Example of Circuit]

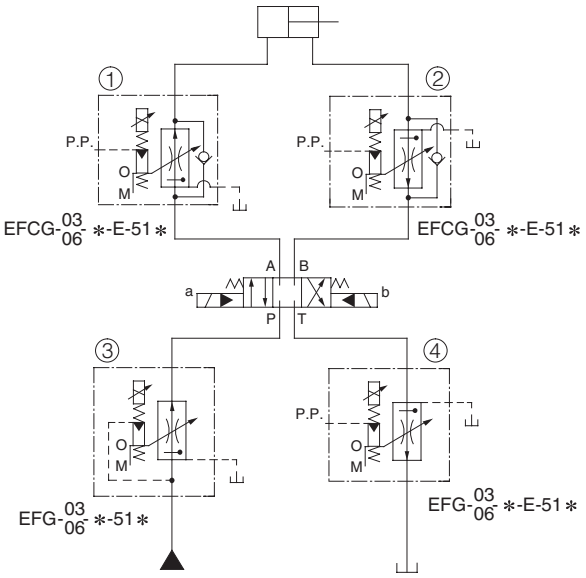

EFG / EFCG -03- 60 / 125 - ∗-51/5190

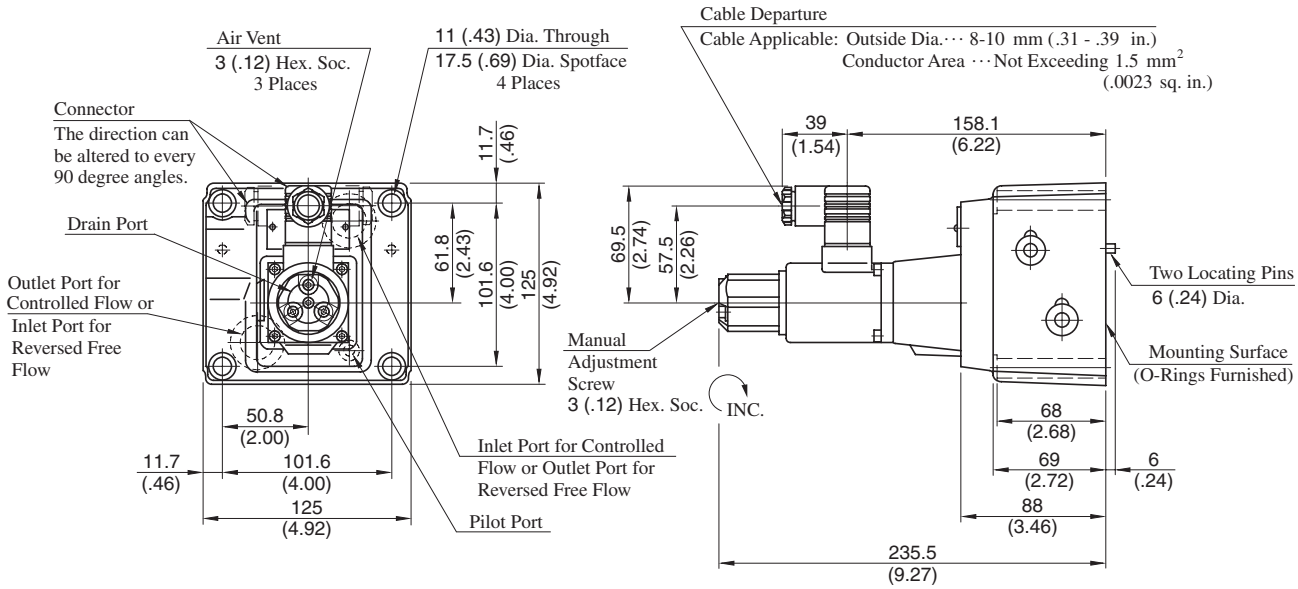

DIMENSIONS IN MILLIMETRES (INCHES)

EFG / EFCG -06-250- ∗-51/5190

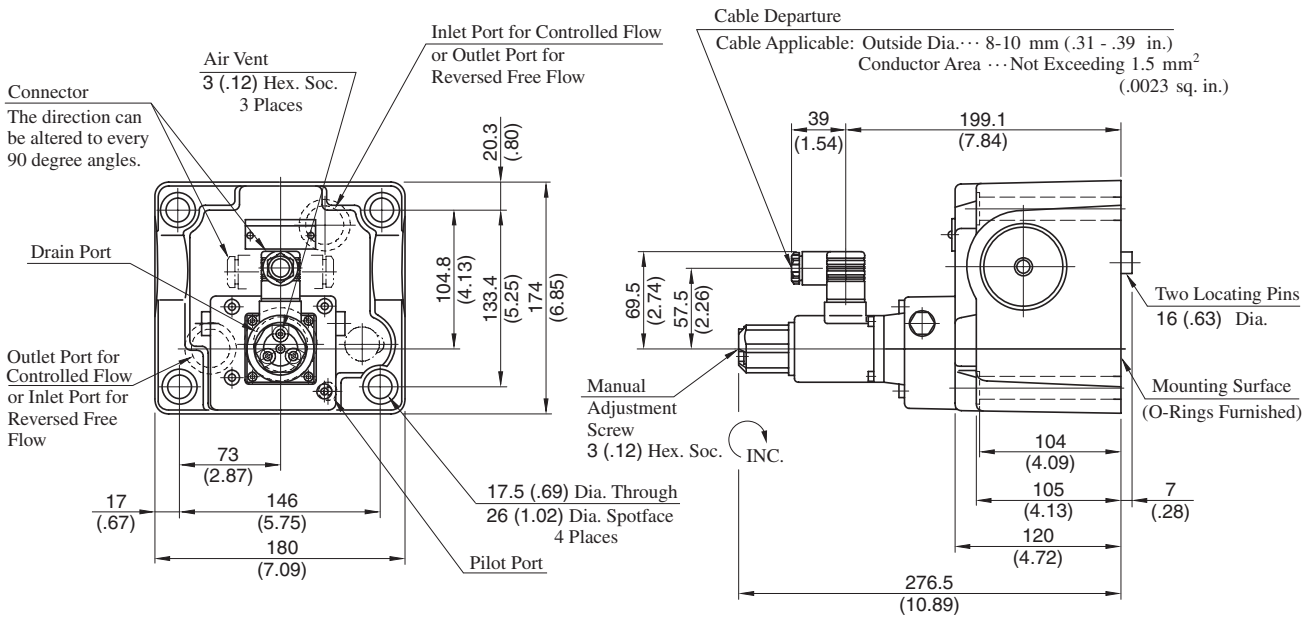

Sub-plate

EFGM-03Y, 03Z-30/3080/3090

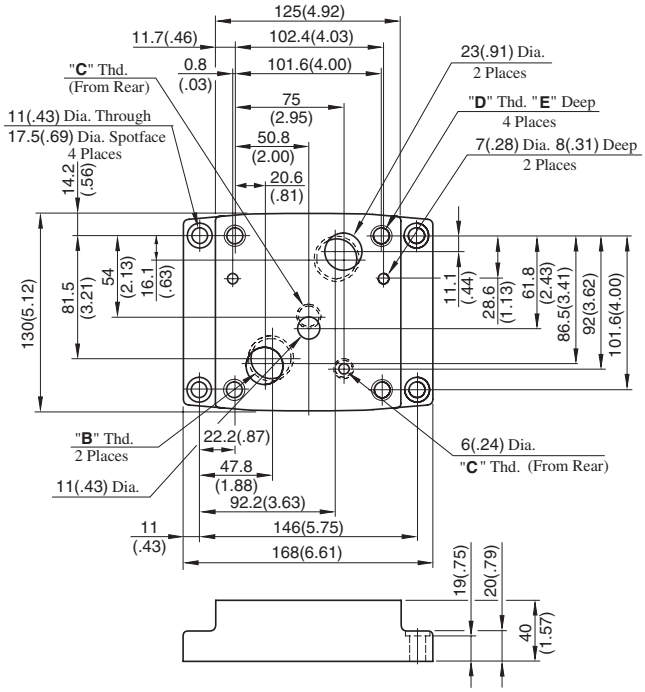

Sub-plate Model Numbers	Thread Size "B" Thd.	"C" Thd.	"D" Thd.	E mm(in.)
EFGM-03Y-30	Rc 3/4	Rc 1/4	M10	18 (.71)
EFGM-03Z-30	Rc 1			
EFGM-03Y-3080	3/4 BSP.F	1/4 BSP.F		
EFGM-03Z-3080	1 BSP.F			
EFGM-03Y-3090	3/4 NPT	1/4 NPT	3/8-16 UNC	21 (.83)
EFGM-03Z-3090	1 NPT			

DIMENSIONS IN MILLIMETRES (INCHES)

EFGM-06X, 06Y-30/3080/3090

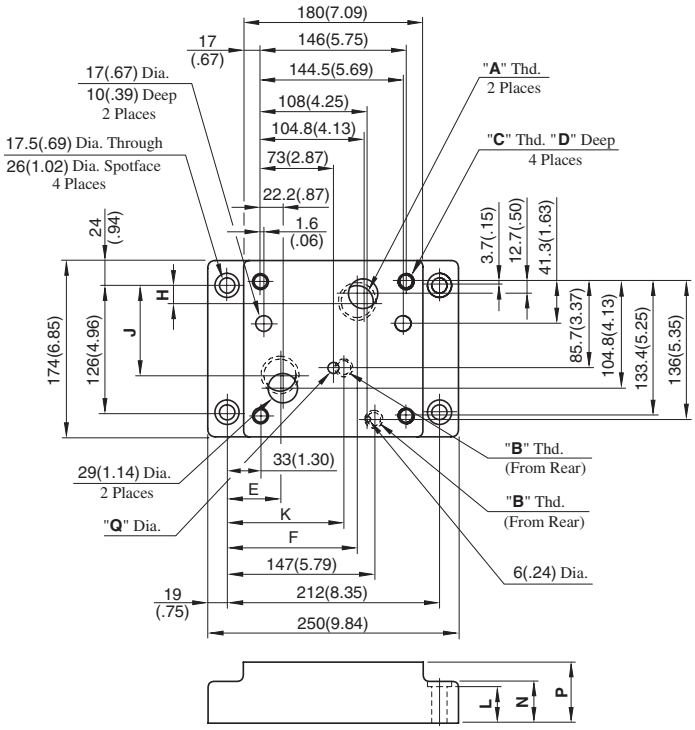

Sub-plate Model Numbers	Thread Size "A" Thd.	"B" Thd.	"C" Thd.
EFGM-06X-30	Rc 1	Rc 3/8	M16
EFGM-06Y-30	Rc 1-1/4		
EFGM-06X-3080	1 BSP.F	3/8 BSP.F	
EFGM-06Y-3080	1-1/4 BSP.F		
EFGM-06X-3090	1 NPT	3/8 NPT	5/8-11 UNC
EFGM-06Y-3090	1-1/4 NPT		

Sub-plate Model Numbers	Dimensions mm (Inches) D	E	F	H	J	K	L	N	P	Q
EFGM-06X-30	30 (1.18)	55.2 (2.17)	137.8 (5.43)	14.3 (.56)	101.1 (3.98)	106 (4.17)	34 (1.34)	35 (1.38)	45 (1.77)	11 (.43)
EFGM-06Y-30		52 (2.05)	132 (5.20)	19.3 (.76)	91.3 (3.59)		39 (1.54)	40 (1.57)	60 (2.36)	
EFGM-06X-3080		55.2 (2.17)	137.8 (5.43)	14.3 (.56)	101.1 (3.98)	116 (4.57)	34 (1.34)	35 (1.38)	45 (1.77)	15.2 (.60)
EFGM-06Y-3080		52 (2.05)	132 (5.20)	19.3 (.76)	91.3 (3.59)		39 (1.54)	40 (1.57)	60 (2.36)	15 (.59)
EFGM-06X-3090	35 (1.38)	55.2 (2.17)	137.8 (5.43)	14.3 (.56)	101.1 (3.98)	106 (4.17)	34 (1.34)	35 (1.38)	45 (1.77)	11 (.43)
EFGM-06Y-3090		52 (2.05)	132 (5.20)	19.3 (.76)	91.3 (3.59)		39 (1.54)	40 (1.57)	60 (2.36)	

Input Current vs. Flow

Viscosity: 30 mm²/s
(141 SSU)

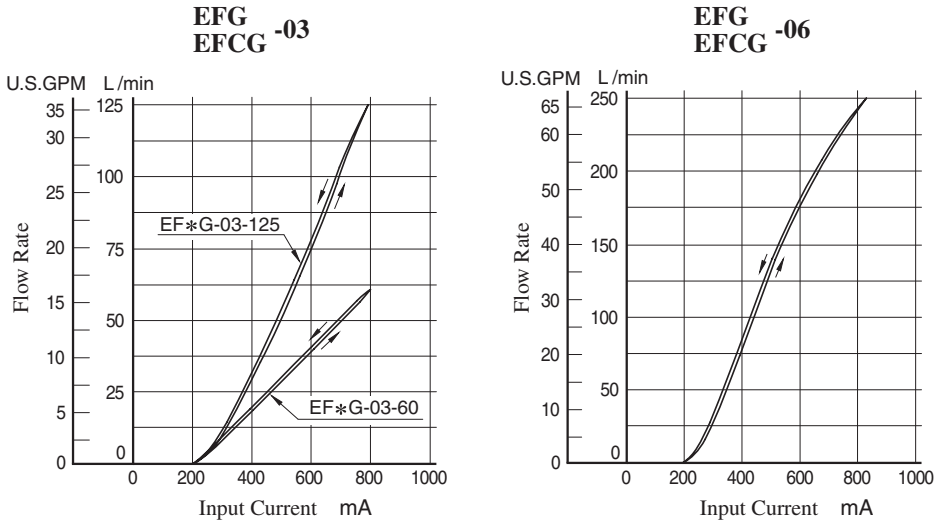

Step Response

These characteristics have been obtained by measuring on each valve. Therefore , they may vary according to a hydraulic circuit to be used.

Viscosity: 30 mm²/s
(141 SSU)

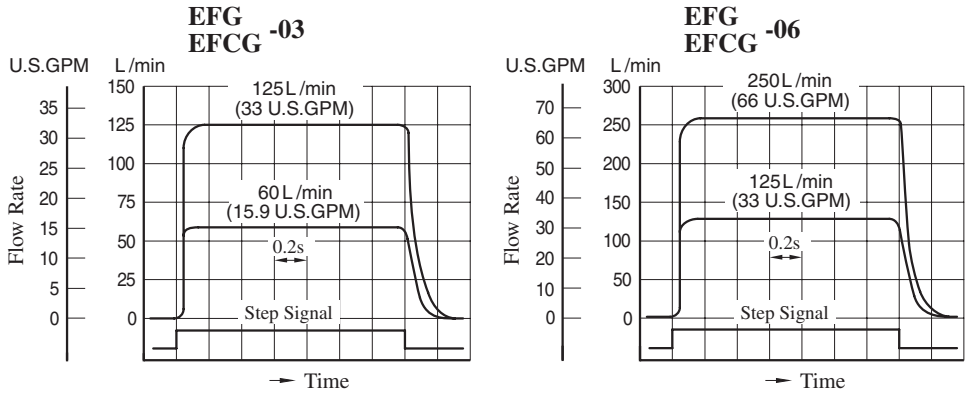

Frequency Response

Viscosity: 30 mm²/s
(141 SSU)

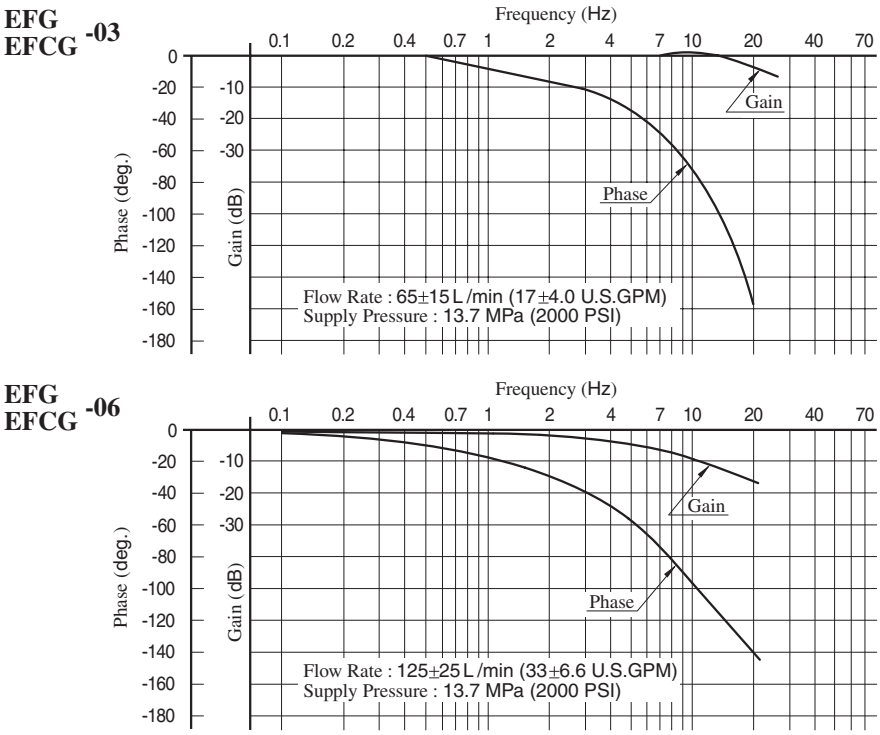

Viscosity vs. Flow

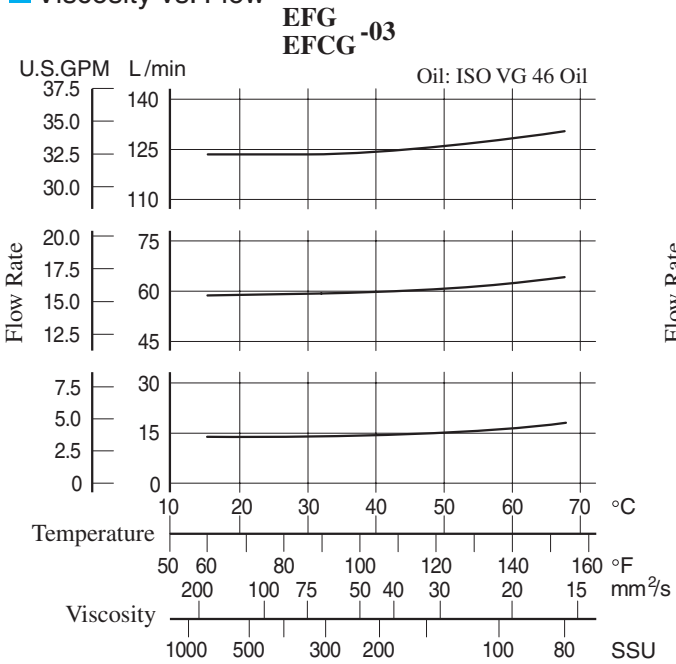

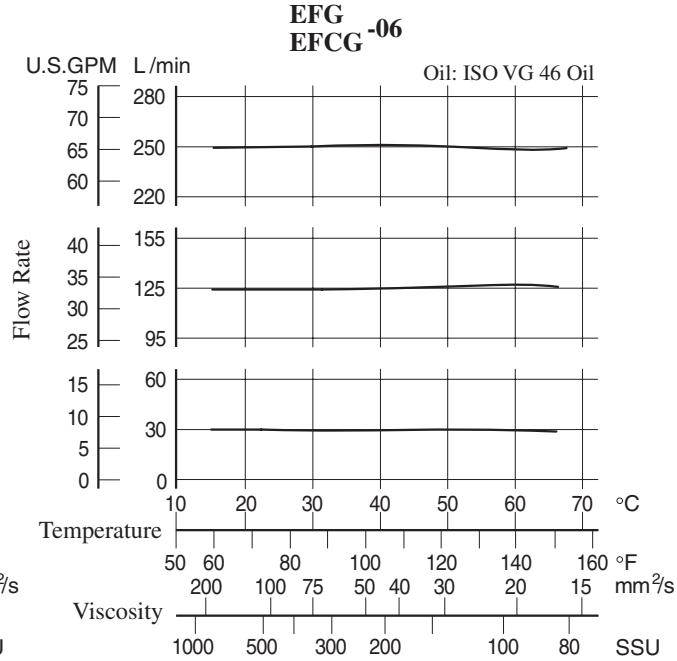

Differential Pressure vs. Metred Flow

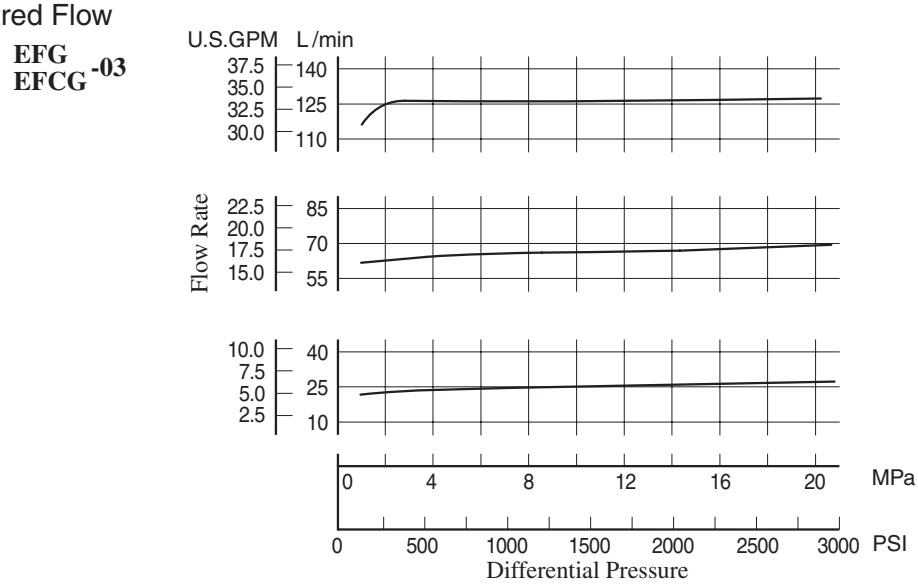

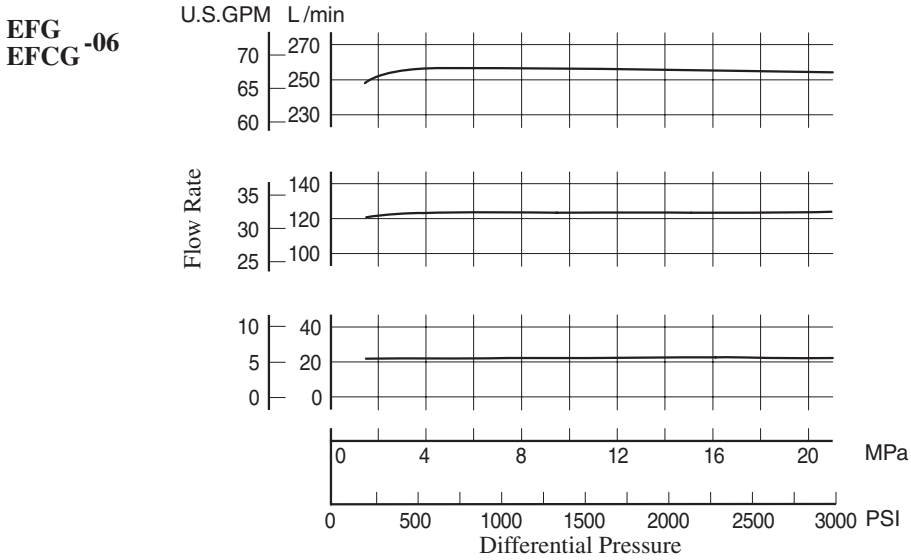

List of Seals and Solenoid Ass'y

EFG / EFCG -03-∗-∗-51/5190

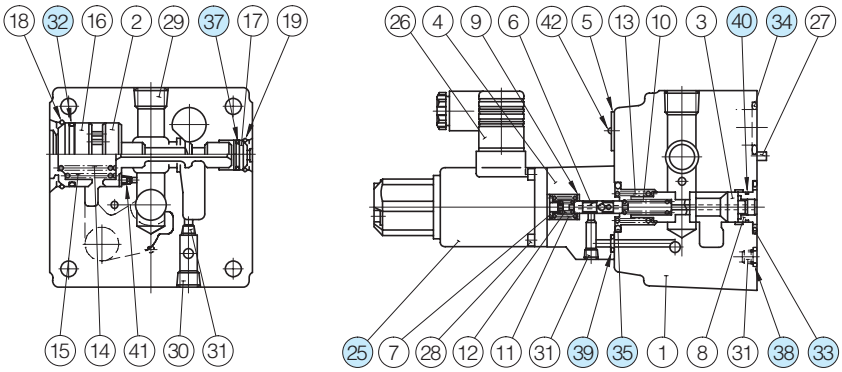

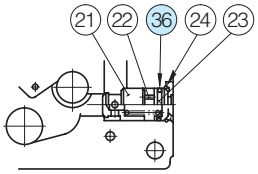

With Check Valve (EFCG-03)

Note: The connector assembly GDM-211-B-11 (Item 26) is not included in the solenoid assembly.
Note: When ordering seals, please specify the seal kit number from the table right.
In addition to the right o-rings, seals for solenoid ass'y is included in the seal kit.
For the detail of the solenoid ass'y seals, see page 674.

List of Seal Kits

Valve Model Numbers	Seal Kit Numbers
EFG-03-∗-∗-51∗	KS-EFG-03-51
EFCG-03-∗-∗-51∗	KS-EFCG-03-51

List of Seals and Solenoid Ass'y

Item	Name of Parts	Part Numbers	Qty.
25	Solenoid Ass'y	E318-Y06M1-28-61	1
32	O-Ring	SO-NB-G35	1
33	O-Ring	SO-NB-P28	1
34	O-Ring	SO-NB-P28	2
35	O-Ring	SO-NB-P26	1
36	O-Ring	SO-NB-P16	1
37	O-Ring	SO-NB-P14	1
38	O-Ring	SO-NB-P9	1
39	O-Ring	SO-NB-P6	2
40	O-Ring	SO-NA-A016	1

EFG / EFCG -06-250-∗-51/5190

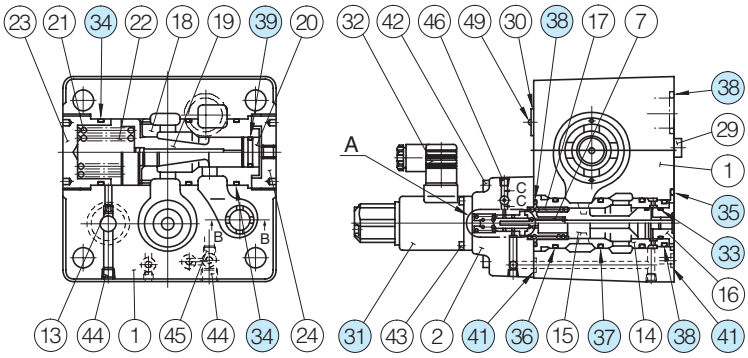

With Check Valve (EFCG-06)

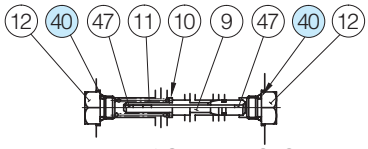

Detail of Section C-C

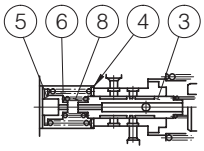

Detail of "A"

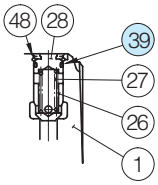

Section B-B

Note: The connector assembly GDM-211-B-11 (Item 32) is not included in the solenoid assembly.
Note: When ordering seals, please specify the seal kit number from the table right.
In addition to the right o-rings, seals for solenoid ass'y is included in the seal kit.
For the detail of the solenoid ass'y seals, see page 674.

List of Seal Kits

Valve Model Numbers	Seal Kit Numbers
EFG-06-250-∗-51∗	KS-EFG-06-51
EFCG-06-250-∗-51∗	KS-EFCG-06-51

List of Seals and Solenoid Ass'y

Item	Name of Parts	Part Numbers	Qty.
31	Solenoid Ass'y	E318-Y06M1-28-61	1
33	O-Ring	SO-NA-P21	1
34	O-Ring	SO-NB-P50	3
35	O-Ring	SO-NB-P46	1
36	O-Ring	SO-NB-P36	1
37	O-Ring	SO-NB-P34	2
38	O-Ring	SO-NB-P32	4
39	O-Ring	SO-NA-P21	1★
40	O-Ring	SO-NB-P10	2
41	O-Ring	SO-NB-P9	3

★ Two O-rings are required for the EFCG.

40Ω–10Ω Series
Proportional Electro-Hydraulic Flow Control and Relief Valves

This flow control and relief valve is an energy-saving valve that supplies the minimum pressure and flow necessary for actuator drive.
Since this valve controls the pump pressure by following the load pressure while keeping the differential pressure minimized, it serves as a low power-consumption energy - saving, metre-in, controlled flow control valve.
Further, since a temperature compensation function is incorporated, this valve provides consistent flow control without respect to the fluid temperature.

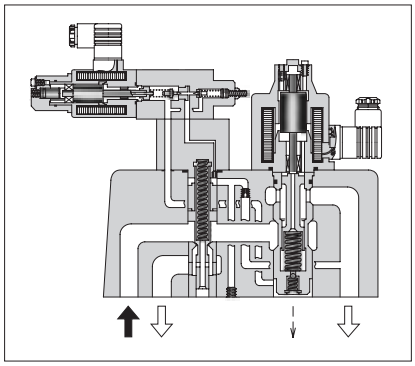

Graphic Symbols

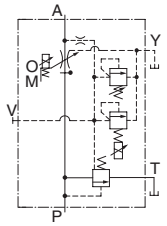

With Proportional Pilot Relief Valve

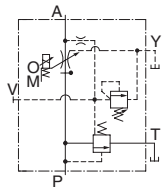

Without Proportional Pilot Relief Valve

Specifications

Description		Model No. EFBG-03 -125-∗-17∗	EFBG-06 -250-∗-17∗	EFBG-10 -500-∗-17∗
Max. Operating Pressure MPa (PSI)		24.5 (3550)	24.5 (3550)	24.5 (3550)
Max. Flow L/min (U.S.GPM)		125 (33)	250 (66)	500 (132)
Metred Flow Adjustment Range L/min (U.S.GPM)		1-125 (.26-33)	2.5-250 (.66-66)	5-500 (1.32-132)
Flow Controls	Rated Current	600 mA	580 mA	700 mA
	Coil Resistance	45 Ω	45 Ω	45 Ω
	Differential Pressure MPa (PSI)	0.6 (85)	0.7 (100)	0.9 (130)
	Hysteresis	7% or less	7% or less	7% or less
	Repeatability	1% or less	1% or less	1% or less
Pressure Controls ★1	Pres. Adj. Range MPa (PSI) ★2	C: 1.4-13.7 (205-2000) H: 1.4-20.6 (205-3000)	C: 1.5-13.7 (220-2000) H: 1.5-20.6 (220-3000)	C: 1.6-13.7 (230-2000) H: 1.6-20.6 (230-3000)
	Rated Current	C: 750 mA H: 750 mA	C: 690 mA H: 730 mA	C: 690 mA H: 690 mA
	Coil Resistance	10 Ω	10 Ω	10 Ω
	Hysteresis	3% or less	3% or less	3% or less
	Repeatability	1% or less	1% or less	1% or less
Approx. Mass kg (lbs.)		Refer to page 714 to 716		

★1. The specifications for pressure controls are applied to models with proportional pilot relief valve. (Ex. EFBG-03-125-C-17)
★2. The maximum pressure adjustment range of the models without proportional pilot relief valves is 24.5 MPa (3550 PSI).

Model Number Designation

F-	EFB	G	-03	-125	-C	-17	∗
Special Seals	Series Number	Type of Mounting	Valve Size	Max. Metred Flow L/min (U.S.GPM)	Proportional Pilot Relief Valve Pressure Adjustment Range	Design Number	Design Standards
F: Special Seals for Phosphate Ester Type Fluid (Omit if not required)	**EFB**: Proportional Electro-Hydraulic Flow Control and Relief Valve	**G**: Sub-plate Mounting	**03**	**125**: 125 (33)	**C, H**: See Specifications **None**: Without Proportional Pilot Relief Valve	**17**	Refer to ★
			06	**250**: 250 (66)		**17**	
			10	**500**: 500 (132)		**17**	

★ Design Standards: None ..... Japanese Standard "JIS" and European Design Standard
90 ..... N. American Design Standard

Attachment

Mounting Bolts

Valve Model Numbers	Socket Head Cap Screw		Qty.
	Japanese Std. "JIS" and European Design Std.	N. American Design Std.	
EFBG-03	M10 × 100 Lg.	3/8-16 UNC × 4 Lg.	4
EFBG-06	M16 × 130 Lg.	5/8-11 UNC × 5 Lg.	4
EFBG-10	M20 × 130 Lg.	3/4-10 UNC × 5 Lg.	4

Applicable Power Amplifiers

For stable performance, it is recommended that Yuken's applicable power amplifiers be used (for details see page 772, 778).

Valve Model Numbers	Power Amplifier Model Numbers	
	For Flow Control	For Pres. Control
EFBG-03-125-17/1790 EFBG-06-250-17/1790 EFBG-10-500-17/1790	AME-D-S-∗-40 AME-DF-S-∗-22 AME-T-S-∗-22	—
03 EFBG-06-∗-C/H-17/1790 10	AME-D2-H1-∗-12	

Sub-plate

Valve Model Numbers	Japanese Standard "JIS"		European Design Standard		N. American Design Standard		Approx. Mass kg (lbs.)
	Sub-plate Model Numbers	Thread Size	Sub-plate Model Numbers	Thread Size	Sub-plate Model Numbers	Thread Size	
EFBG-03	EFBGM-03Y-10	Rc 3/4	EFBGM-03Y-1080	3/4 BSP.F	EFBGM-03Y-1090	3/4 NPT	6 (13.2)
	EFBGM-03Z-10	Rc 1	EFBGM-03Z-1080	1 BSP.F	EFBGM-03Z-1090	1 NPT	
EFBG-06	EFBGM-06X-10	Rc 1	EFBGM-06X-1080	1 BSP.F	EFBGM-06X-1090	1 NPT	12.5 (27.6)
	EFBGM-06Y-10	Rc 1-1/4	EFBGM-06Y-1080	1-1/4 BSP.F	EFBGM-06Y-1090	1-1/4 NPT	16 (35.3)
EFBG-10	EFBGM-10Y-10★	1-1/2, 2 Flange Mounting	EFBGM-10Y-1080★	1-1/2, 2 Flange Mounting	EFBGM-10Y-1090★	1-1/2, 2 Flange Mounting	37 (81.6)

- Sub-plates are available. Specify the sub-plate model number from the table above. When sub-plates are not used, the mounting surface should have a good machined finish.

★When ordering the EFBGM-10Y, see Type F3 Pipe Flange Kits on page 821 and order an appropriate pipe flange kit also.

Instructions

Drain Back Pressure

Check that the drain back pressure dose not exceed 0.2 MPa (29 PSI).

When Relief Valve Passing Flow Rate is Low in Pressure Control State

To avoid preselected pressure instability, use a passing flow rate of 10 L/min (2.6 U.S.GPM) or higher for nominal sizes 03 and 06 or 15 L/min (4.0 U.S.GPM) or higher for nominal size 10.
Further, check that the tank-line back pressure does not exceed 0.5 MPa (70 PSI).

Safety Valve Pressure Setting

The pressure of the safety valve is preset at the value equal to the upper limit of the pressure adjustment range plus 2 MPa (290 PSI). Please adjust the pressure of the valve so preset to meet the pressure to be used actually.
To lower the pressure setting, turn the safety valve pressure adjustment screw anti-clockwise. After adjustment, be sure to tighten the lock nut.

Models with Proportional Pilot Relief Valve

EFBG-03-125-$^{C}_{H}$-17/1790

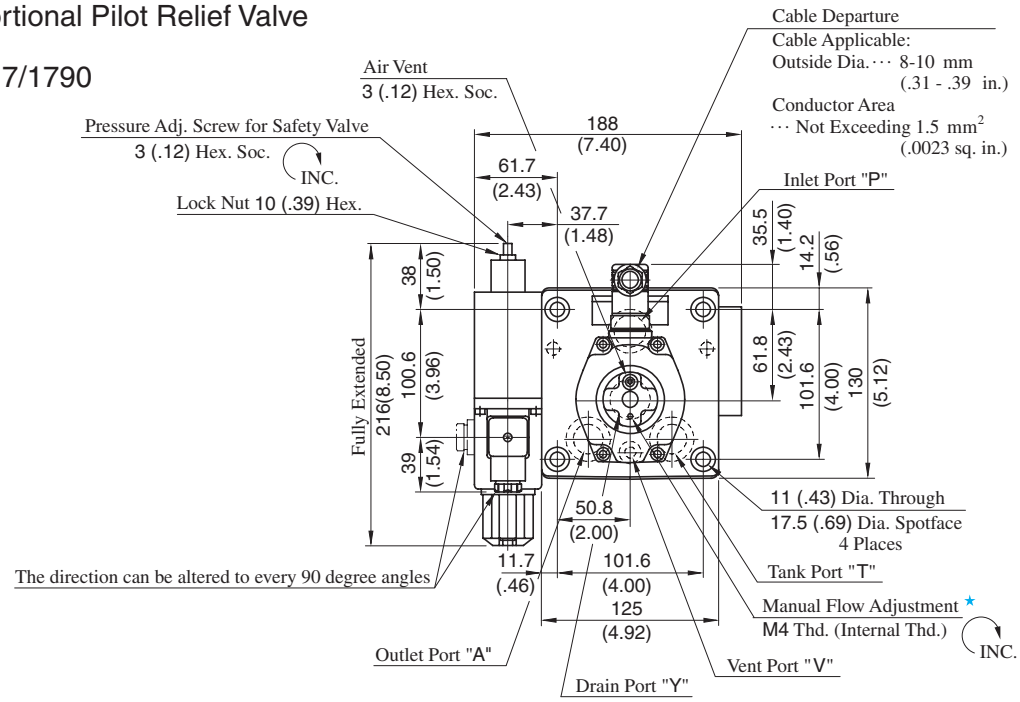

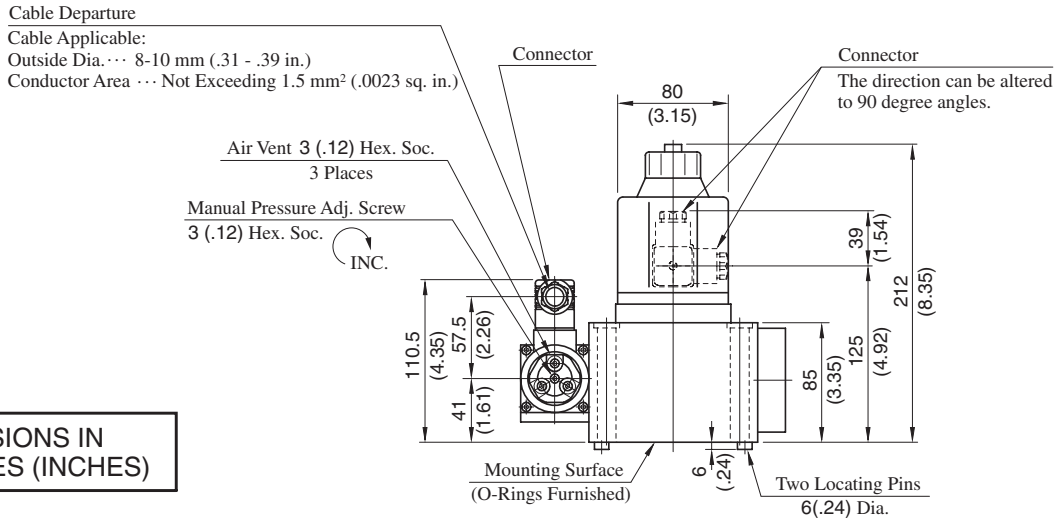

DIMENSIONS IN MILLIMETRES (INCHES)

★ Manual flow adjustment can be done by screwing for example an M4×20L screw in the M4 thread or pushing in a rod etc. there.

Approx. Mass ..... 16 kg (35.3 lbs.)

Models without Proportional Pilot Relief Valve

EFBG-03-125-17/1790

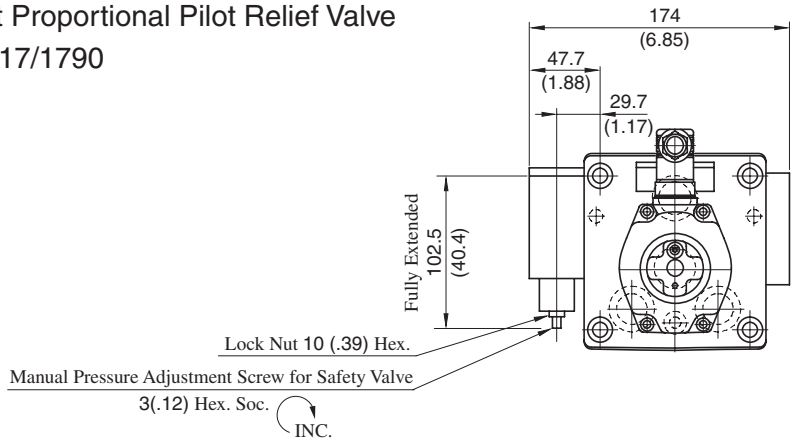

Approx. Mass ..... 14 kg (30.9 lbs.)

● For other dimensions, please refer to the models with proportional pilot relief valve.

Models with Proportional Pilot Relief Valve

EFBG-06-250-$\frac{C}{H}$-17/1790

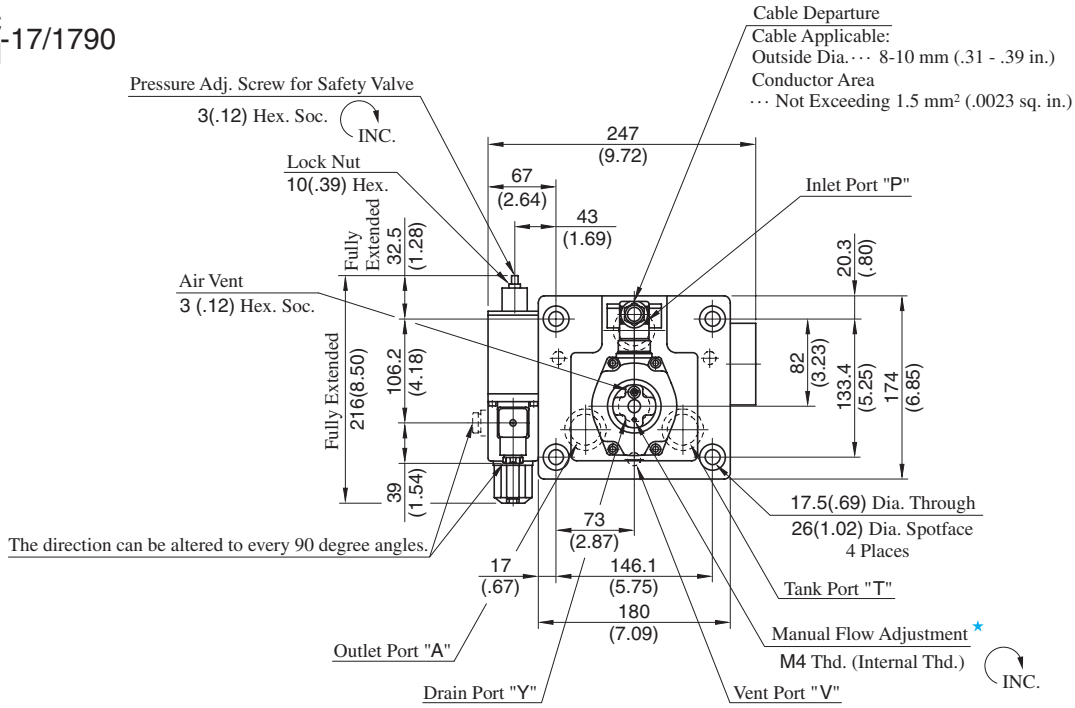

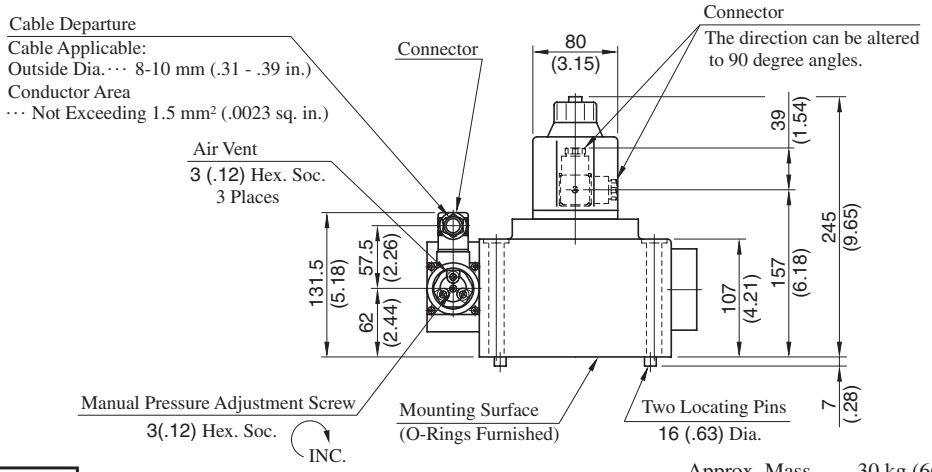

Approx. Mass ..... 30 kg (66.2 lbs.)

DIMENSIONS IN MILLIMETRES (INCHES)

★Manual flow adjustment can be done by screwing for example an M4×20L screw in the M4 thread or pushing in a rod etc. there.

Models without Proportional Pilot Relief Valve

EFBG-06-250-17/1790

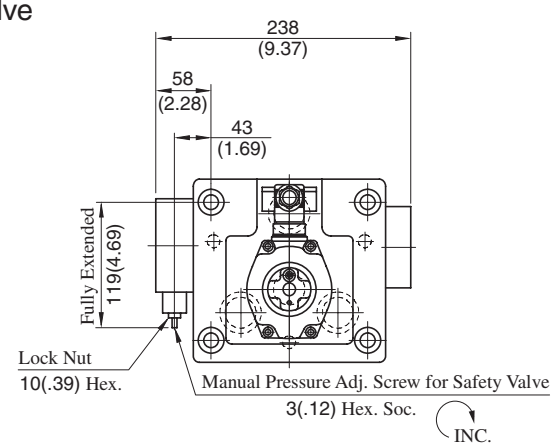

Approx. Mass ..... 28 kg (61.7 lbs.)

● For other dimensions, please refer to the models with Proportional Pilot Relief Valve.

Models with Proportional Pilot Relief Valve

EFBG-10-500-$^{C}_{H}$-17/1790

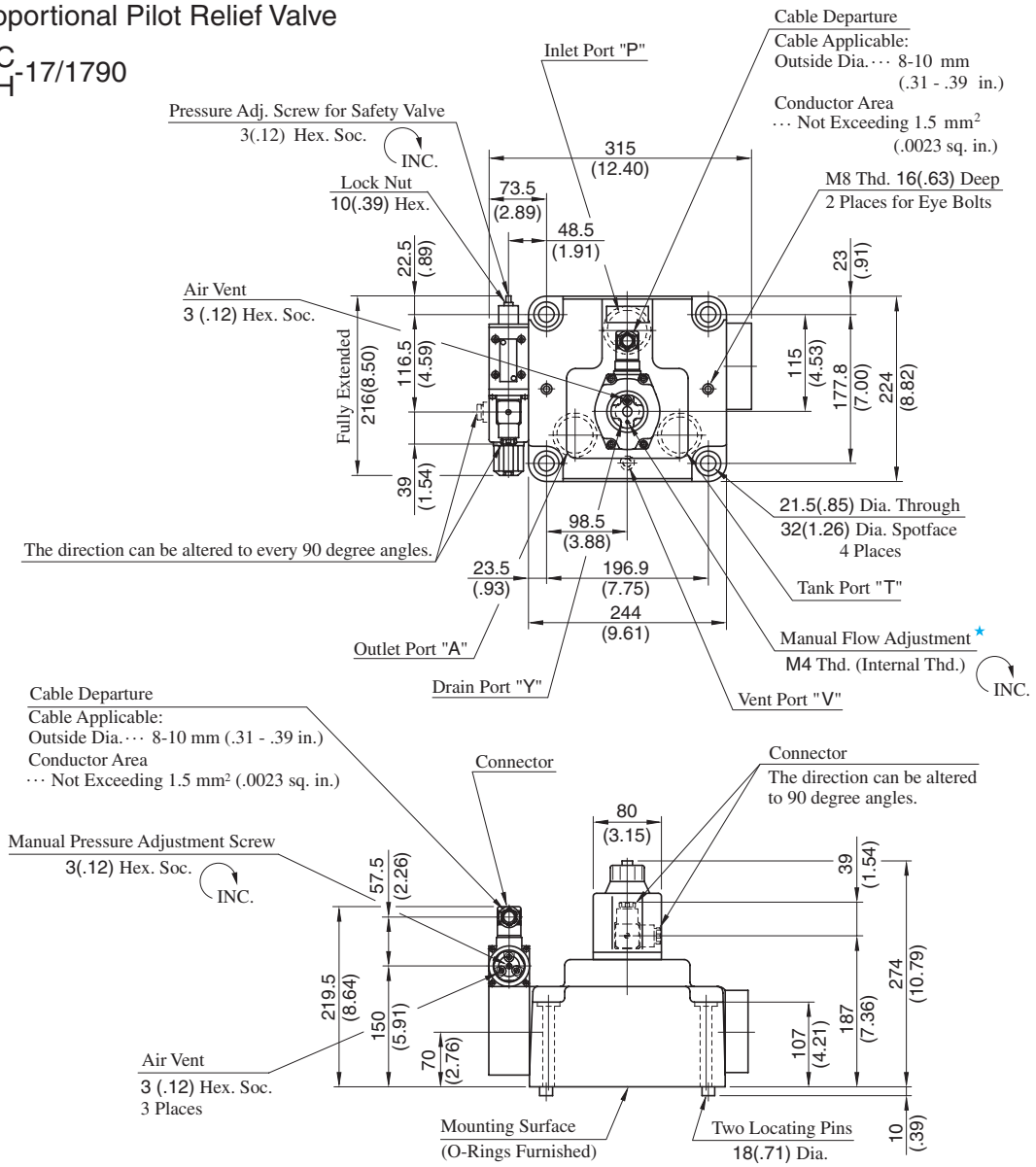

Approx. Mass ..... 60 kg (132 lbs.)

DIMENSIONS IN MILLIMETRES (INCHES)

★ Manual adjustment can be done by screwing for example an M4× 20 L screw in the M4 thread or pushing in a rod etc. there.

Models without Proportional Pilot Relief Valve

EFBG-10-500-17/1790

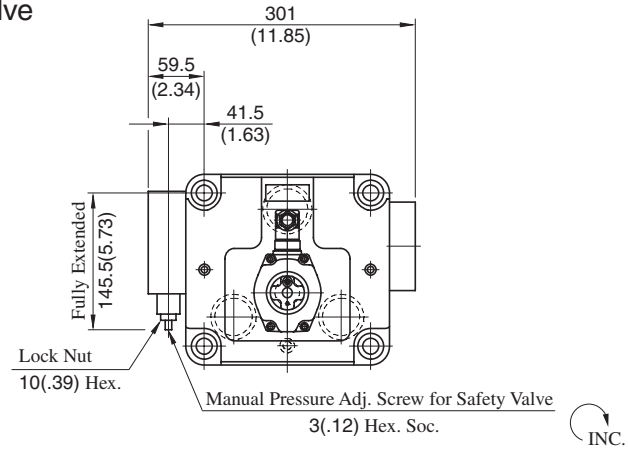

Approx. Mass ..... 58 kg (128 lbs.)

● For other dimensions, please refer to the models with Proportional Pilot Relief Valve.

Sub-plate

EFBGM-03Y/03Z-10/1080/1090

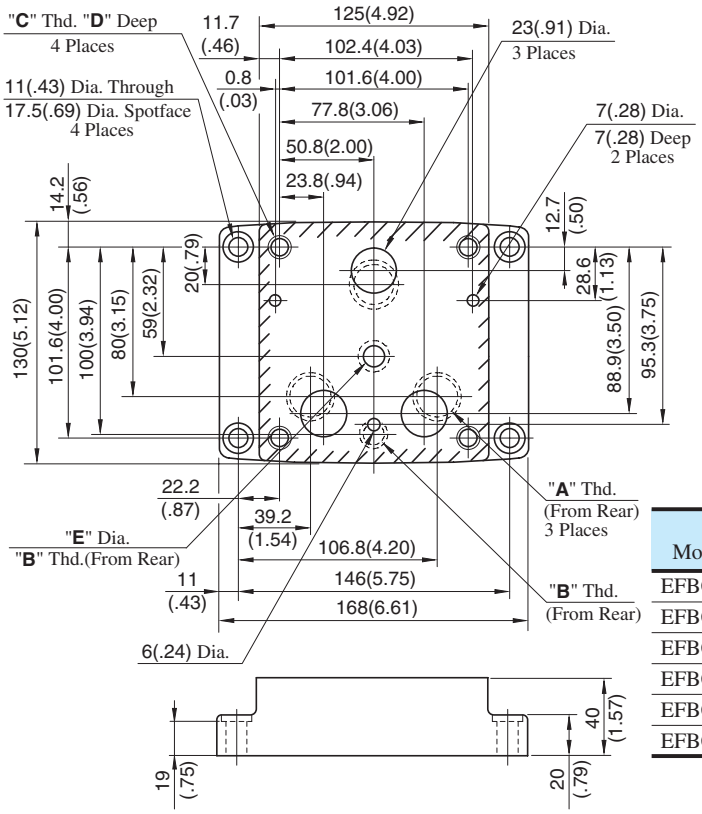

Sub-plate Model Numbers	Thread Size			mm (in.)	
	"A" Thd.	"B" Thd.	"C" Thd.	D	E
EFBGM-03Y-10	Rc 3/4	Rc 1/4	M10	18 (.71)	11 (.43)
EFBGM-03Z-10	Rc 1				
EFBGM-03Y-1080	3/4 BSP.F	1/4 BSP.F			11.7 (.46)
EFBGM-03Z-1080	1 BSP.F				
EFBGM-03Y-1090	3/4 NPT	1/4 NPT	3/8-16 UNC	21 (.83)	11 (.43)
EFBGM-03Z-1090	1 NPT				

DIMENSIONS IN MILLIMETRES (INCHES)

EFBGM-06X/06Y-10/1080/1090

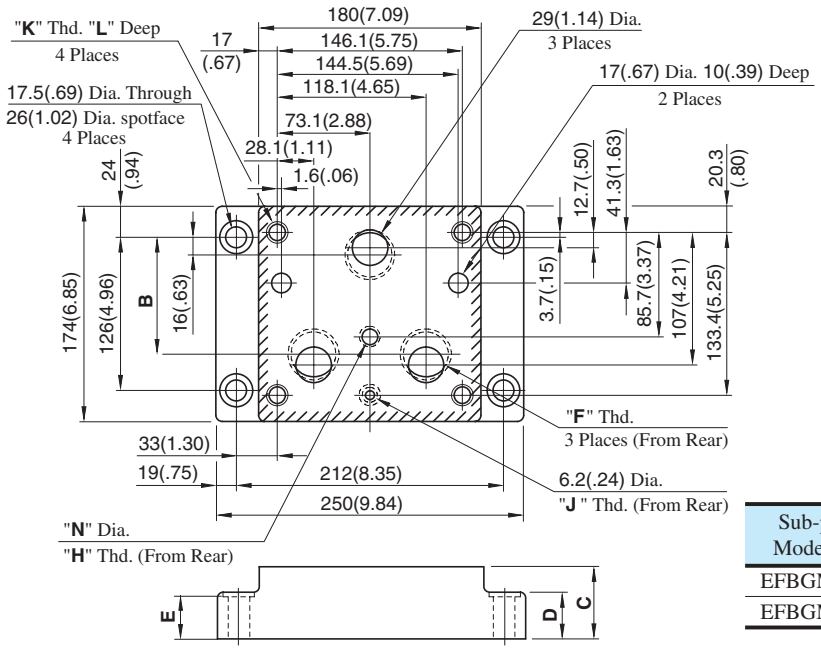

Sub-plate Model No.	Dimensions mm (in.)			
	B	C	D	E
EFBGM-06X	103.3 (4.07)	45 (1.77)	35 (1.38)	34 (1.34)
EFBGM-06Y	95 (3.74)	60 (2.36)	40 (1.54)	39 (1.54)

Sub-plate Model No.	Thread Size				mm (in.)	
	"F" Thd.	"H" Thd.	"J" Thd.	"K" Thd.	L	N
EFBGM-06X-10	Rc 1	Rc 3/8	Rc 1/4	M 16	30 (1.18)	14 (.55)
EFBGM-06Y-10	Rc 1-1/4					
EFBGM-06X-1080	1 BSP.F	3/8 BSP.F	1/4 BSP.F	M 16	30 (1.18)	15.2 (.60)
EFBGM-06Y-1080	1-1/4 BSP.F					
EFBGM-06X-1090	1 NPT	3/8 NPT	1/4 NPT	5/8-11 UNC	35 (1.38)	14 (.55)
EFBGM-06Y-1090	1-1/4 NPT					

Sub-plate

EFBGM-10Y-10/1080/1090

DIMENSIONS IN MILLIMETRES (INCHES)

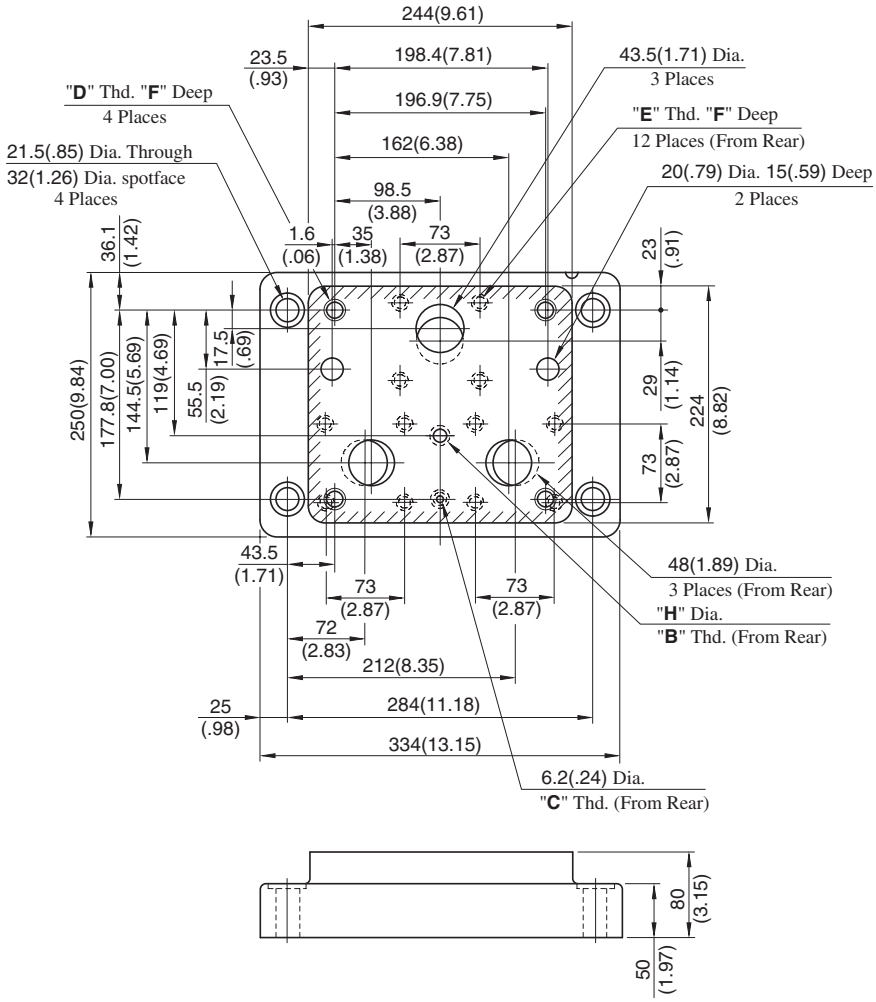

Sub-plate Model Numbers	Thread Size				mm (in.)	
	"B" Thd.	"C" Thd.	"D" Thd.	"E" Thd.	F	H
EFBGM-10Y-10	Rc 3/8	Rc 1/4	M20	M16	32 (1.26)	14 (.55)
EFBGM-10Y-1080	3/8 BSP.F	1/4 BSP.F				15.2 (.60)
EFBGM-10Y-1090	3/8 NPT	1/4 NPT	3/4-10 UNC	5/8-11 UNC	34 (1.34)	14 (.55)

Step Response

These characteristics have been obtained by measuring on each valve.
Therefore, they may vary according to a hydraulic circuit to be used.

Viscosity: 30 mm²/s (141 SSU)

Flow Controls

EFBG-03

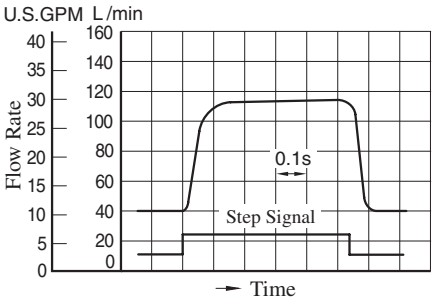

EFBG-06

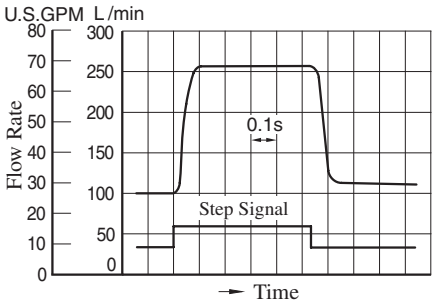

EFBG-10

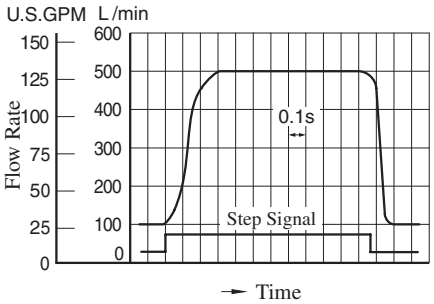

Pressure Controls

Viscosity: 30 mm²/s (141 SSU)

EFBG-03

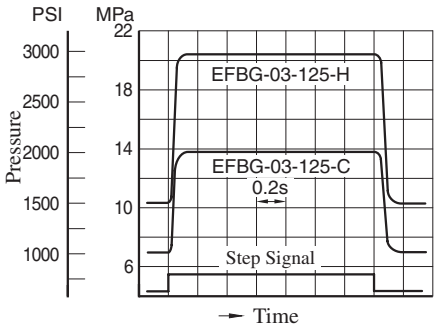

EFBG-06

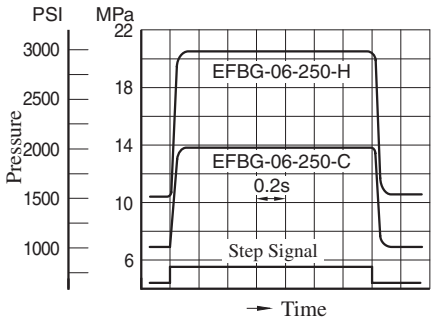

EFBG-10

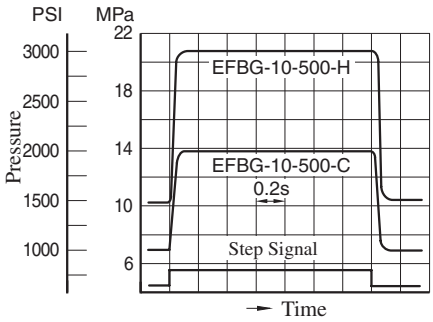

Input Current vs. Flow

Viscosity: 30 mm²/s (141 SSU)

EFBG-03

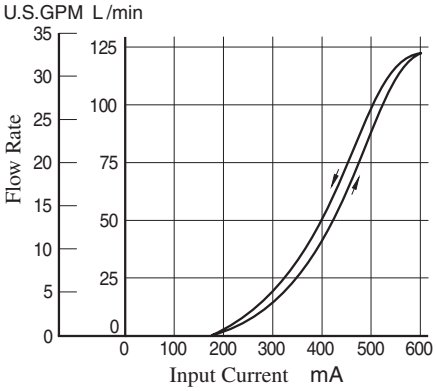

EFBG-06

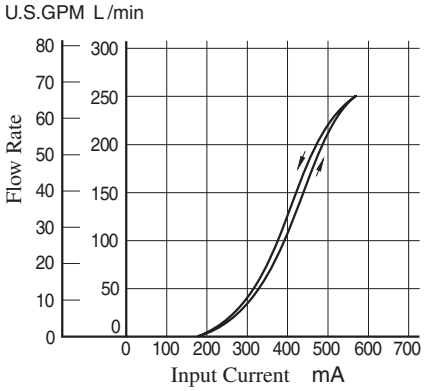

EFBG-10

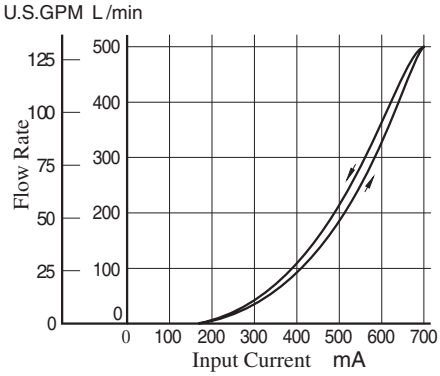

Input Current vs. Pressure

Viscosity: 30 mm²/s (141 SSU)

EFBG-03

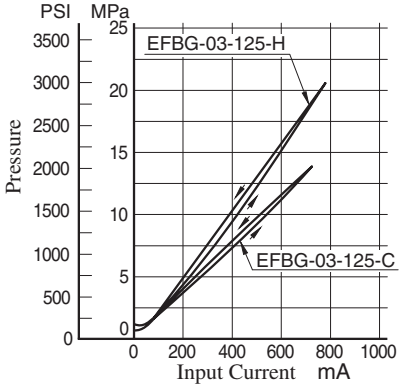

EFBG-06

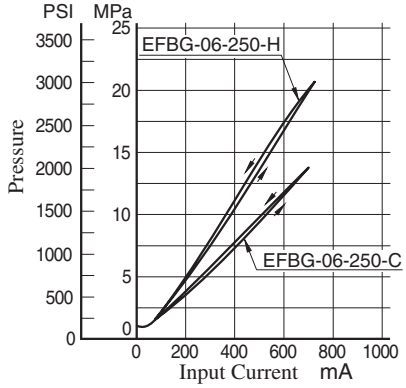

EFBG-10

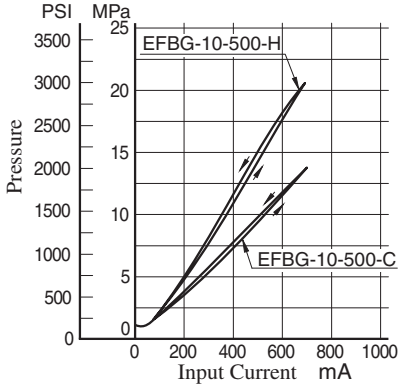

List of Seals, Solenoid Ass'y and Safety Valve

EFBG-03-125-∗-17/1790
EFBG-06-250-∗-17/1790

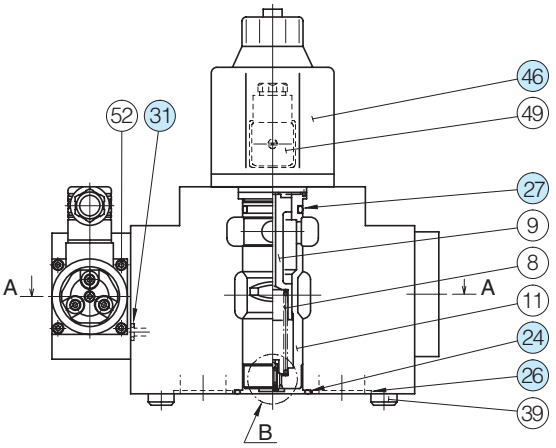

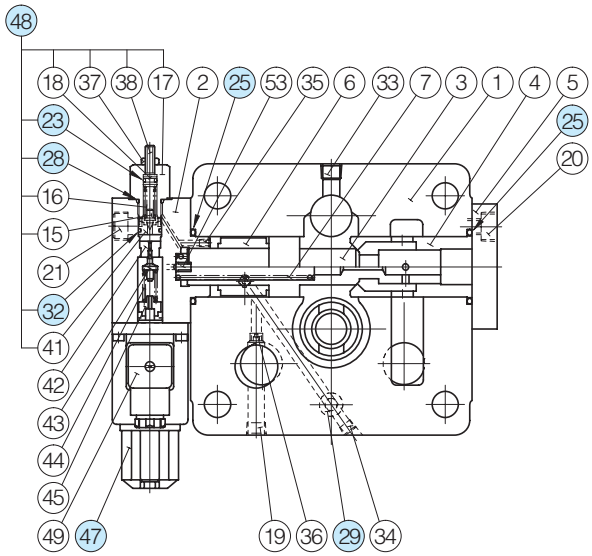

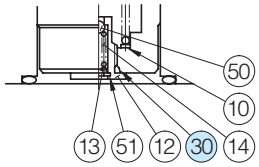

Detail of "B"

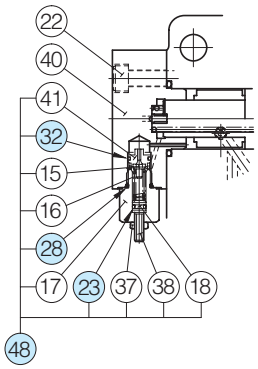

Without Proportional
Pilot Relief Valve

Section A-A

List of Seals

Item	Name of Parts	Part Numbers		Qty.
		EFBG-03	EFBG-06	
23	O-Ring	SO-NA-P6	SO-NA-P6	1
24	O-Ring	SO-NB-G30	SO-NB-P44	1
25	O-Ring	SO-NB-P32	SO-NB-P42	2
26	O-Ring	SO-NB-P28	SO-NB-P32	3
27	O-Ring	—	SO-NB-P34	1
28	O-Ring	SO-NB-P14	SO-NB-P14	1
29	O-Ring	SO-NB-P11	SO-NB-P11	1
30	O-Ring	—	SO-NA-P10	1
31	O-Ring	SO-NB-P9	SO-NB-P9	1
32	O-Ring	SO-NB-A013	SO-NB-A013	1

List of Seal Kits

Valve Model Numbers	Seal Kit Numbers
EFBG-03-125-17∗	KS-EFBG-03-17
EFBG-03-125-C/H-17∗	KS-EFBG-03-C-17
EFBG-06-250-17∗	KS-EFBG-06-17
EFBG-06-250-C/H-17∗	KS-EFBG-06-C-17

Solenoid Ass'y and Safety valve

Valve Model Number s	㊼ Solenoid Ass'y Model No.	㊻ Solenoid Ass'y Model No.	㊽ Safety Valve Model No.
EFBG-03-125-C/H-17/1790	E318-Y06M2-05-61	E321-45-20	SB1094-2002
EFBG-06-250-C/H-17/1790			
EFBG-03-125-17/1790 EFBG-06-250-17/1790	—		

Note: The connector assembly GDM-211-B-11 (Item 49) is not included in the solenoid assembly.
When ordering seals, please specify the seal kit number from the table above.
In addition to the above o-rings, seeals for solenoid ass'y ㊻ and ㊼ are included in the seal kit.
For the details of seals for solenoid ass'y ㊻, see page 704 and for solenoid ass'y ㊼ see page 674.

List of Seals, Solenoid Ass'y, Pilot Relief Valves and Safety Valve

EFBG-10-500-∗-17/1790

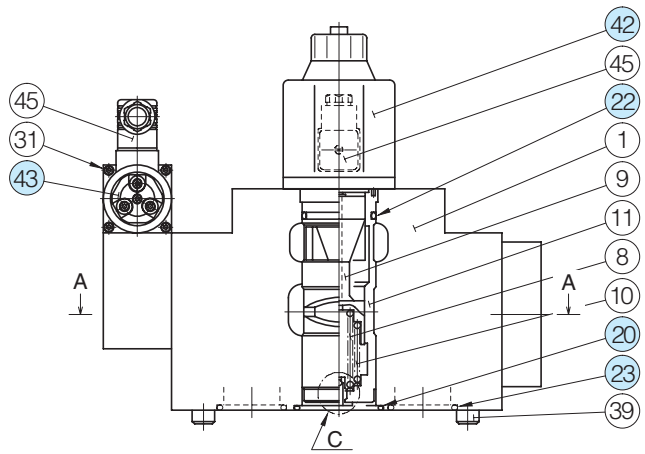

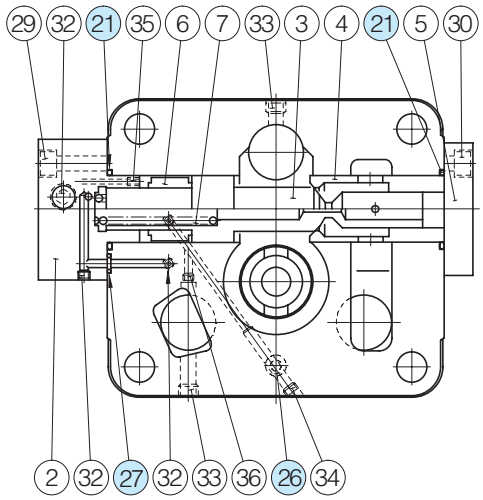

Section A-A

● Detail of Safety Valve (Item 44)

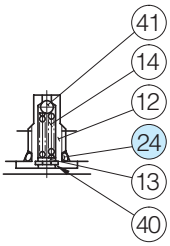

Detail of "C"

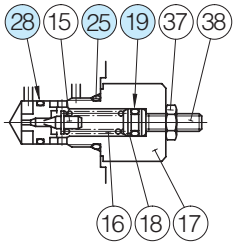

Section B-B

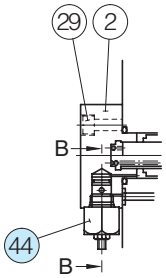

Without Proportional Pilot Relief Valve

● List of Seals and Solenoid Ass'y

Item	Name of Parts	Part Numbers	Qty.
19	O-Ring	SO-NA-P6	1
20	O-Ring	SO-NB-G60	1
21	O-Ring	SO-NB-G55	2
22	O-Ring	SO-NB-P50	1
23	O-Ring	SO-NB-P48	3
24	O-Ring	SO-NA-P10	1
25	O-Ring	SO-NB-P14	1
26	O-Ring	SO-NB-P11	1
27	O-Ring	PO-NB-P11	1
28	O-Ring	SO-NB-A013	1
42	Solenoid Ass'y	E321-45-20	1

● List of Seal Kits

Valve Model Numbers	Seal Kit Numbers
EFBG-10-500-17∗	KS-EFBG-10-17
EFBG-10-500-C/H-17∗	KS-EFBG-10-C-17

Note: The connector assembly GDM-211-B-11 (Item 45) is not included in the solenoid assembly.
When ordering seals, please specify the seal kit number from the table right.
In addition to the above o-rings, seals for Pilot Valve and solenoid ass'y are included in the seal kit.

● Pilot Valves and Safety Valve

Valve Model Numbers	(43) Proportional Pilot Relief Valve Model Numbers	(44) Safety Valve Model Numbers
EFBG-10-500-17/1790	——	SB1094-2002
EFBG-10-500-C-17/1790	EDG-01V-C-1-P18T17-5103	——
EFBG-10-500-H-17/1790	EDG-01V-H-1-PNT13-5103	——

Note: For the details of seals for solenoid ass'y (42), see page 704 and for pilot relief valve (43) see page 674.

10Ω–10Ω Series
Proportional Electro-Hydraulic Flow Control and Relief Valves

This flow control and relief valve is an energy-saving valve that supplies the minimum pressure and flow necessary for actuator drive.
Since this valve controls the pump pressure by following the load pressure while keeping the differential pressure minimized, it serves as a low power-consumption energy-saving, metre-in, controlled flow control valve.
Further, since a temperature compensation function is incorporated, this valve provides consistent flow control without respect to the fluid temperature.

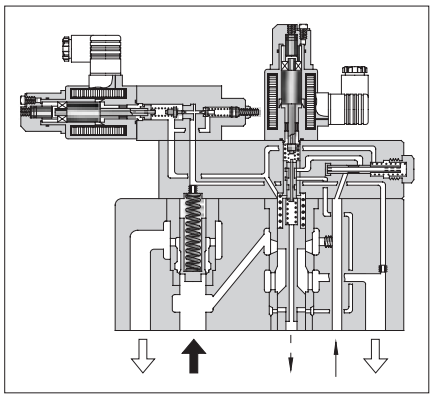

Specifications

Description \ Model Numbers		EFBG-03 -125-∗-∗-61∗	EFBG-06 -250-∗-∗-61∗	EFBG-10 -500-∗-∗-51∗
Max. Operating Pressure MPa (PSI)		24.5 (3550)	24.5 (3550)	24.5 (3550)
Max. Flow L/min (U.S.GPM)		125 (33)	250 (66)	500 (132)
Metred Flow Adjustment Range L/min (U.S.GPM)		1-125 (.26-33)	2.5-250 (.66-66)	5-500 (1.32-132)
Min. Pilot Pressure MPa (PSI)		1.5 (220)	1.5 (220)	1.5 (220)
Pilot Flow L/min (U.S.GPM)	at Normal	1 (.26)	1 (.26)	1 (.26)
	at Transition	3 (.79)	4 (1.06)	6 (1.59)
Flow Controls	Rated Current	800 mA	750 mA	900 mA
	Coil Resistance	10 Ω	10 Ω	10 Ω
	Differential Pressure MPa (PSI)	0.7 (100)	0.7 (100)	0.9 (130)
	Hysteresis	3% or less	3% or less	3% or less
	Repeatability	1% or less	1% or less	1% or less
Pressure Controls ★1	Pres. Adj. Range MPa (PSI) ★2	C: 1.4-15.7 (200-2275) H: 1.4-24.5 (200-3550)	C: 1.4-15.7 (200-2275) H: 1.4-24.5 (200-3550)	C: 1.5-15.7 (220-2275) H: 1.5-24.5 (220-3550)
	Rated Current	C: 890 mA H: 930 mA	C: 820 mA H: 880 mA	C: 800 mA H: 900 mA
	Coil Resistance	10 Ω	10 Ω	10 Ω
	Hysteresis	3% or less	3% or less	3% or less
	Repeatability	1% or less	1% or less	1% or less
Approx. Mass kg (lbs.)		Refer to page 724 to 726		

★1. The specifications for pressure controls are applied to models with proportional pilot relief valve. (Ex. EFBG-03-125-C-∗-61)
★2. The maximum pressure adjustment range of the models without proportional pilot relief valves is 24.5 MPa (3550 PSI).

Graphic Symbols

With Proportional Pilot Relief Valve

External Pilot Internal Pilot

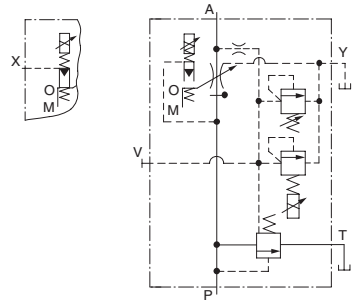

Without Proportional Pilot Relief Valve

External Pilot Internal Pilot

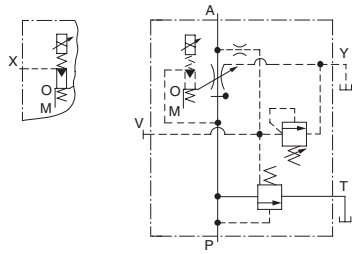

Model Number Designation

F-	EFB	G	-03	-125	-C	-E	-61	*
Special Seals	Series Number	Type of Mounting	Valve Size	Max. Metred Flow L/min (U.S.GPM)	Proportional Pilot Relief Valve Pressure Adj. Range	Pilot Connection	Design Number	Design Standards
F: Special Seals for Phosphate Ester Type Fluid (Omit if not required)	**EFB**: Proportional Electro-Hydraulic Flow Control and Relief Valve	**G**: Sub-plate Mounting	**03**	**125**: 125 (33)	**C, H**: See Specifications **None**: Without Proportional Pilot Relief Valve	**None**: Internal Pilot **E**: External Pilot	**61**	Refer to★
			06	**250**: 250 (66)			**61**	
			10	**500**: 500 (132)			**51**	

★ Design Standards: None ..... Japanese Standard "JIS" and European Design Standard
90 ..... N. American Design Standard

Attachment

Mounting Bolts

Valve Model Numbers	Socket Head Cap Screw		Qty.
	Japanese Std. "JIS" and European Design Std.	N. American Design Std.	
EFBG-03	M10 × 65 Lg.	3/8-16 UNC × 2-1/2 Lg.	4
EFBG-06	M16 × 100 Lg.	5/8-11 UNC × 4 Lg.	4
EFBG-10	M20 × 130 Lg.	3/4-10 UNC × 5 Lg.	4

Applicable Power Amplifiers

For stable performance, it is recommended that Yuken's applicable power amplifiers be used (for details see page 767, 780).

Valve Model Numbers	Power Amplifier Model Numbers	
	For Flow Control	For Pres. Control
EFBG-03-125(-E)-61/6190 EFBG-06-250(-E)-61/6190 EFBG-10-500(-E)-51/5190	AME-D-10-*-20 AMN-D-10 (For DC Power Supply)	—
EFBG-03-125-C/H(-E)-61/6190 EFBG-06-250-C/H(-E)-61/6190 EFBG-10-500-C/H(-E)-51/5190	AME-D2-1010-11	

Sub-plate

Valve Model Numbers	Japanese Standard "JIS"		European Design Standard		N. American Design Standard		Approx. Mass kg (lbs.)
	Sub-plate Model Numbers	Thread Size	Sub-plate Model Numbers	Thread Size	Sub-plate Model Numbers	Thread Size	
EFBG-03	EFBGM-03Y-20	Rc 3/4	EFBGM-03Y-2080	3/4 BSP.F	EFBGM-03Y-2090	3/4 NPT	6 (13.2)
	EFBGM-03Z-20	Rc 1	EFBGM-03Z-2080	1 BSP.F	EFBGM-03Z-2090	1 NPT	
EFBG-06	EFBGM-06X-20	Rc 1	EFBGM-06X-2080	1 BSP.F	EFBGM-06X-2090	1 NPT	12.5 (27.6)
	EFBGM-06Y-20	Rc 1-1/4	EFBGM-06Y-2080	1-1/4 BSP.F	EFBGM-06Y-2090	1-1/4 NPT	16 (35.3)
EFBG-10	EFBGM-10Y-20★	1-1/2, 2 Flange Mounting	EFBGM-10Y-2080★	1-1/2, 2 Flange Mounting	EFBGM-10Y-2090★	1-1/2, 2 Flange Mounting	37 (81.6)

● Sub-plates are available. Specify the sub-plate model number from the table above. When sub-plates are not used, the mounting surface should have a good machined finish.

★ When ordering the EFBGM-10Y, see Type F3 Pipe Flange Kits on page 821 and order an appropriate pipe flange kit also.

Instructions

Drain Back Pressure

Check that the drain back pressure dose not exceed 0.2 MPa (29 PSI).

When Relief Valve Passing Flow Rate is Low in Pressure Control State

To avoid preselected pressure instability, use a passing flow rate of 15 L/min (4.0 U.S.GPM) or higher.
Further, check that the tank-line back pressure dose not exceed 0.5 MPa (70 PSI).

Safety Valve Pressure Setting

The pressure of the saffety valve is preset at the value equal to the upper limit of the pressure adjustment renge plus 2 MPa (290 PSI). Please adjust the pressure of the valve so preset to meet the pressure to be used actually.
To lower the pressure setting, turn the safety valve pressure adjustment screw anti-clockwise. After adjustment, be sure to tighten the lock nut.

Models with Proportional Pilot Relief Valve

EFBG-03-125-$^{C}_{H}$(-E)-61/6190

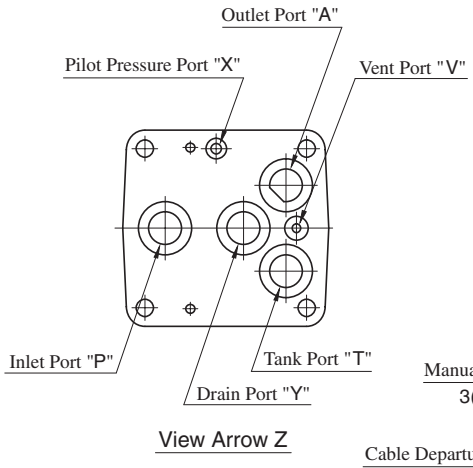

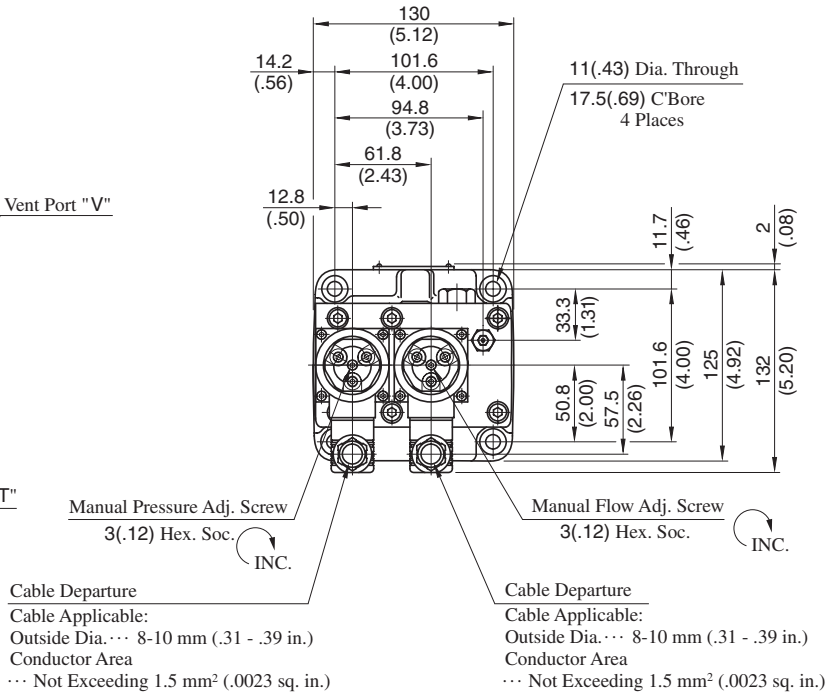

Models without Proportional Pilot Relief Valve

EFBG-03-125(-E)-61/6190

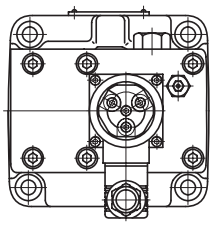

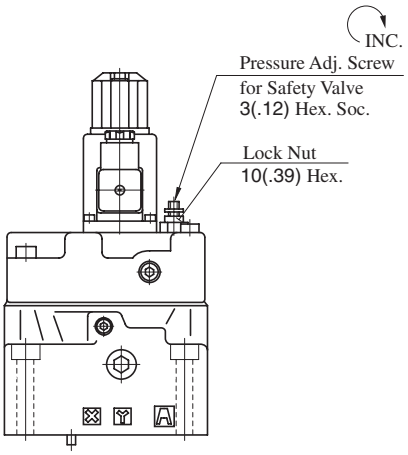

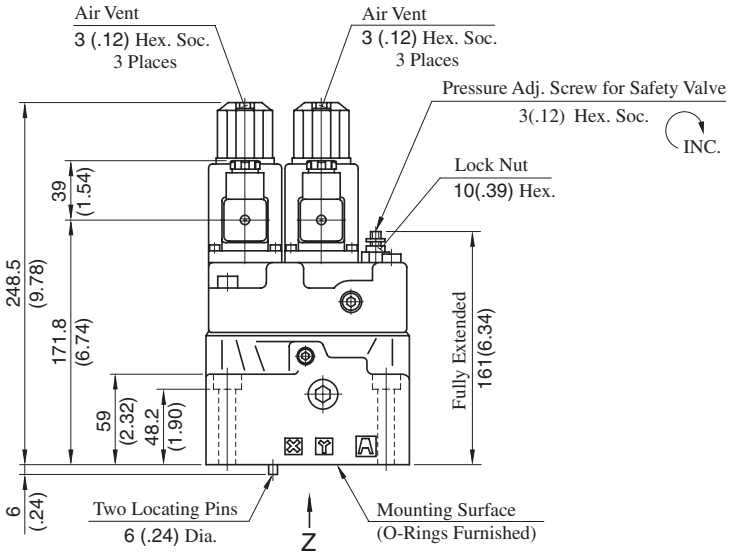

- For other dimensions, please refer to the models with Proportional Pilot Relief Valve.

Approx. Mass ..... 13.3 kg (29.3 lbs.)

Approx. Mass ..... 14 kg (30.9 lbs.)

DIMENSIONS IN MILLIMETRES (INCHES)

Models with Proportional Pilot Relief Valve

EFBG-06-250-$^{C}_{H}$(-E)-61/6190

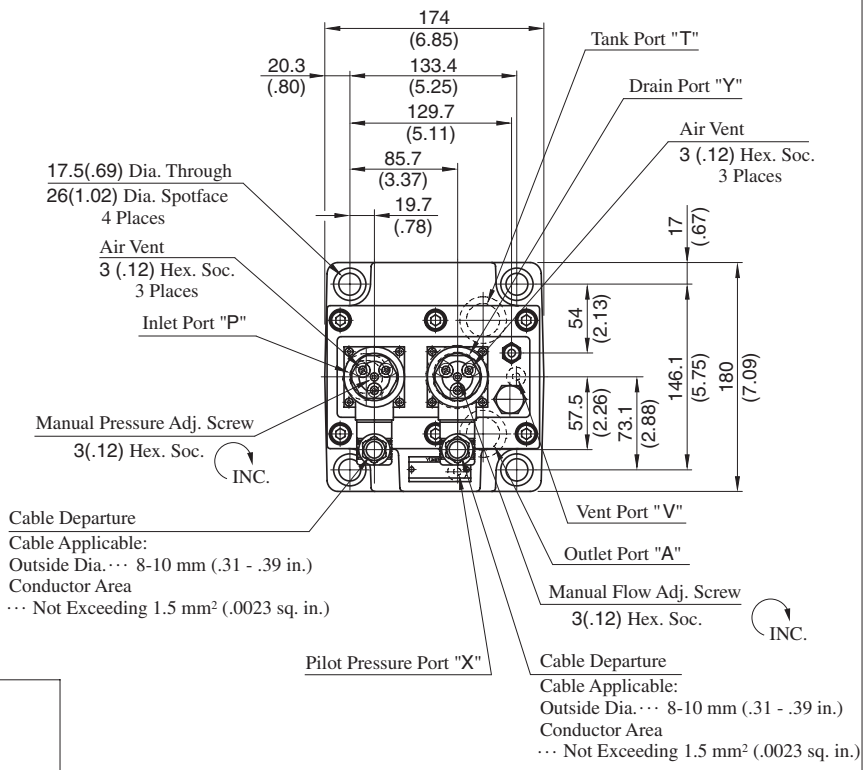

Models without Proportional Pilot Relief Valve

EFBG-06-250(-E)-61/6190

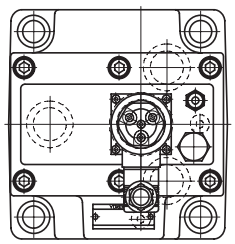

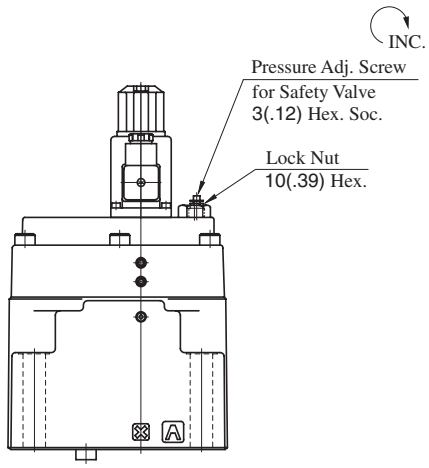

- For other dimensions, please refer to the models with Proportional Pilot Relief Valve.

Approx. Mass ..... 21.3 kg (47.0 lbs.)

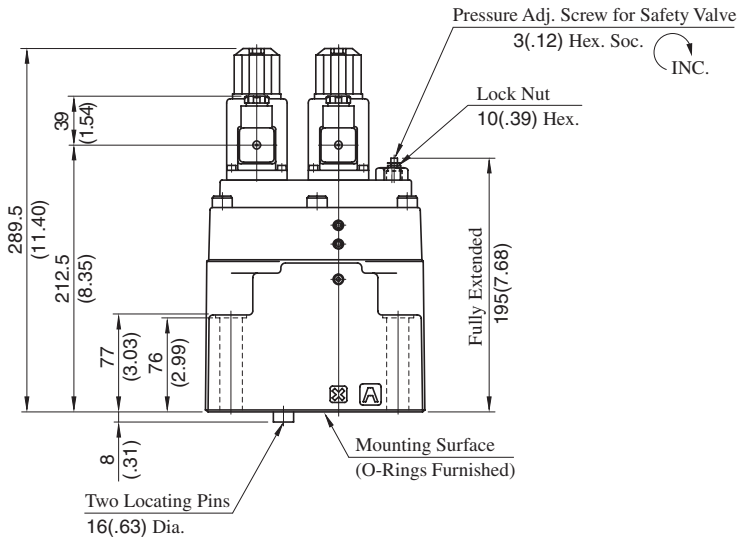

Approx. Mass ..... 22 kg (48.5 lbs.)

DIMENSIONS IN MILLIMETRES (INCHES)

Models with Proportional Pilot Relief Valve

EFBG-10-500-$^{C}_{H}$(-E)-51/5190

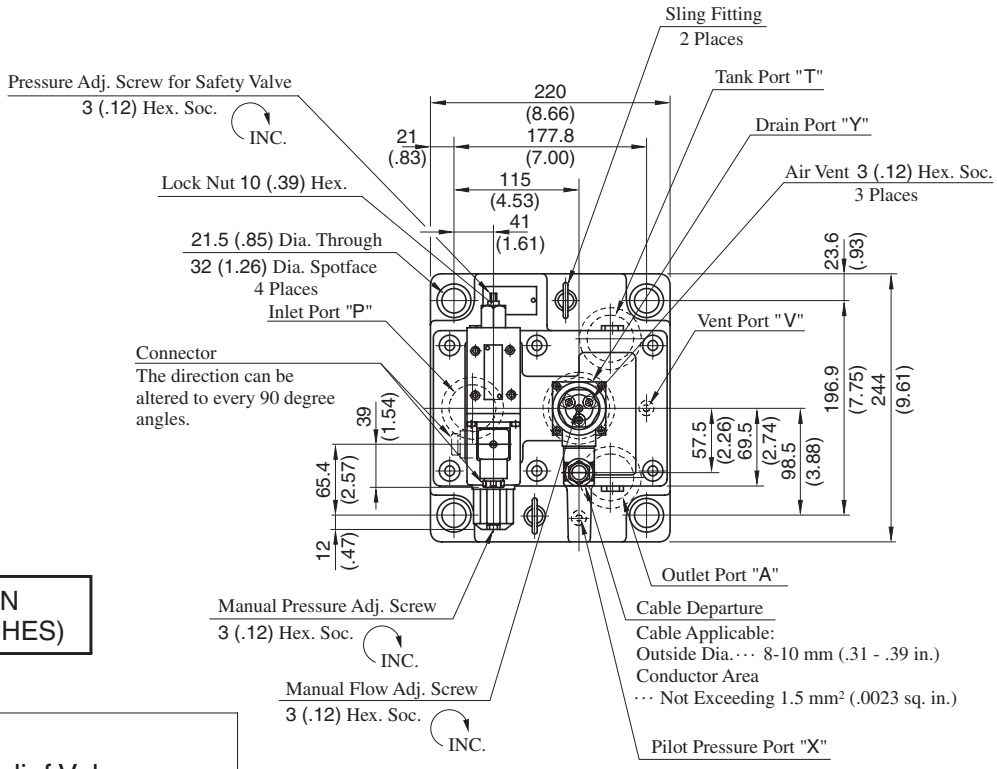

DIMENSIONS IN MILLIMETRES (INCHES)

Models without Proportional Pilot Relief Valve

EFBG-10-500(-E)-51/5190

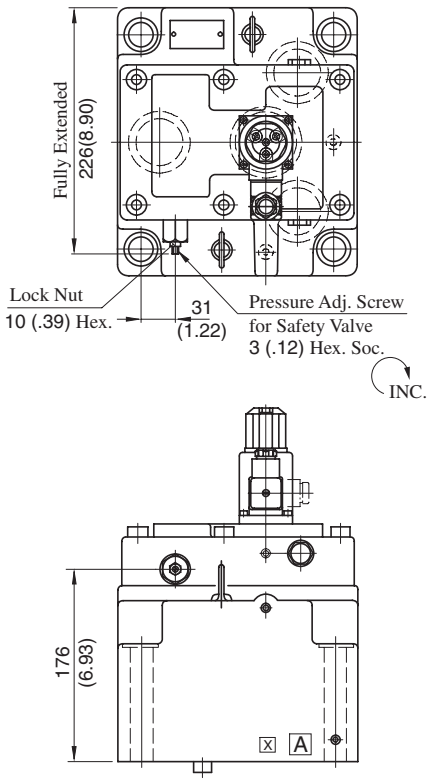

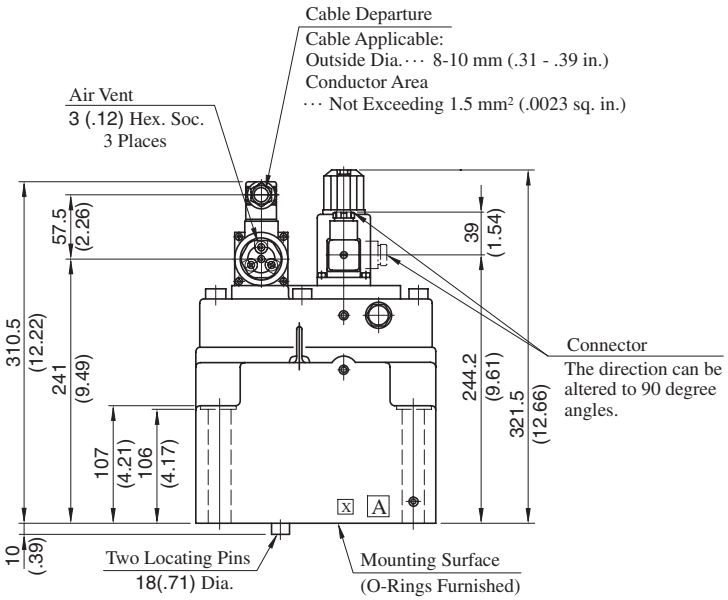

- For other dimensions, please refer to the models with Proportional Pilot Relief Valve.

Approx. Mass ..... 62 kg (137 lbs.)

Approx. Mass ..... 64 kg (141 lbs.)

Sub-plate

EFBGM-03Y/03Z-20/2080/2090

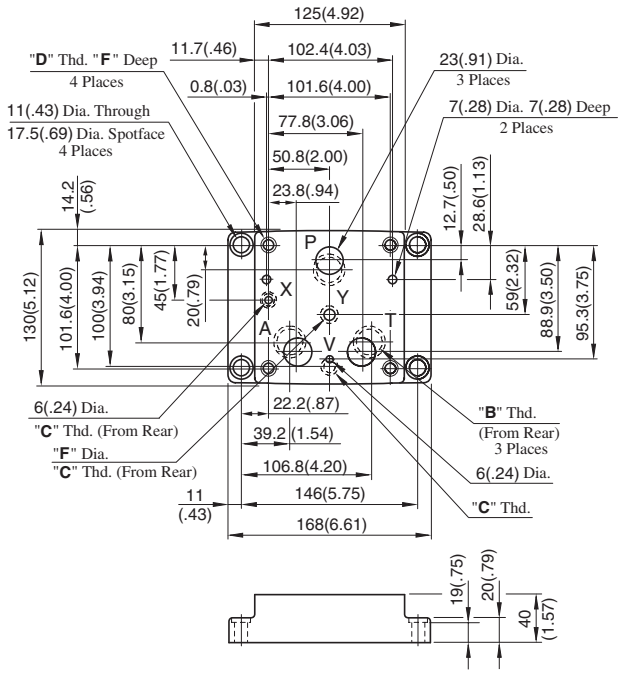

Sub-plate Model Numbers	Thread Size			mm (in.)	
	"B" Thd.	"C" Thd.	"D" Thd.	E	F
EFBGM-03Y-20	Rc 3/4	Rc 1/4	M10	18 (.71)	11 (.43)
EFBGM-03Z-20	Rc 1				
EFBGM-03Y-2080	3/4 BSP.F	1/4 BSP.F			11.7 (.46)
EFBGM-03Z-2080	1 BSP.F				
EFBGM-03Y-2090	3/4 NPT	1/4 NPT	3/8-16 UNC	21 (.83)	11 (.43)
EFBGM-03Z-2090	1 NPT				

DIMENSIONS IN MILLIMETRES (INCHES)

EFBGM-06X/06Y-20/2080/2090

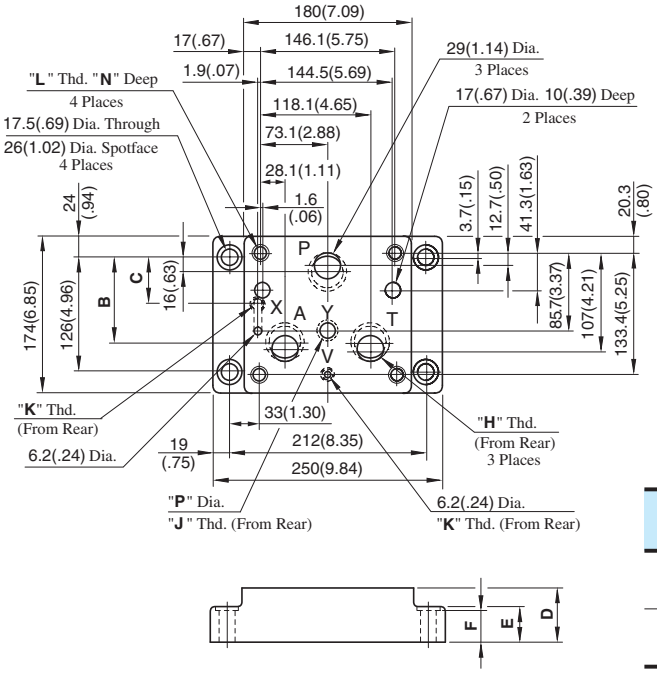

Sub-plate Model Numbers	Dimensions mm (in.)				
	B	C	D	E	F
EFBGM-06X	103.3 (4.07)	63.3 (2.49)	45 (1.77)	35 (1.38)	34 (1.34)
EFBGM-06Y	95 (3.74)	53.3 (2.10)	60 (2.36)	40 (1.57)	39 (1.54)

Sub-plate Model Numbers	Thread Size				mm (in.)	
	"H" Thd.	"J" Thd.	"K" Thd.	"L" Thd.	N	P
EFBGM-06X-20	Rc 1	Rc 3/8	Rc 1/4	M16	30 (1.18)	14 (.55)
EFBGM-06Y-20	Rc 1-1/4					
EFBGM-06X-2080	1 BSP.F	3/8 BSP.F	1/4 BSP.F	M16	30 (1.18)	15.2 (.60)
EFBGM-06Y-2080	1-1/4 BSP.F					
EFBGM-06X-2090	1 NPT	3/8 NPT	1/4 NPT	5/8-11 UNC	35 (1.38)	14 (.55)
EFBGM-06Y-2090	1-1/4 NPT					

EFBGM-10Y-20/2080/2090

DIMENSIONS IN MILLIMETRES (INCHES)

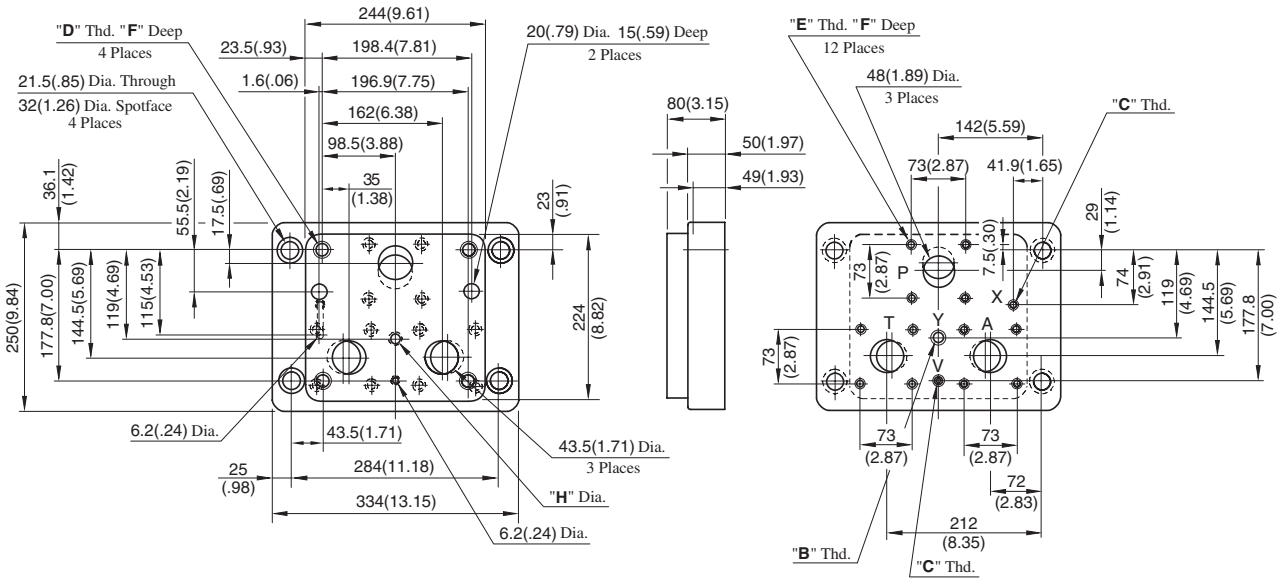

Sub-plate Model Numbers	Thread Size				mm (in.)	
	"B" Thd.	"C" Thd.	"D" Thd.	"E" Thd.	F	H
EFBGM-10Y-20	Rc 3/8	Rc 1/4	M20	M16	32(1.26)	14(.55)
EFBGM-10Y-2080	3/8 BSP.F	1/4 BSP.F				15.2(.60)
EFBGM-10Y-2090	3/8 NPT	1/4 NPT	3/4-10 UNC	5/8-11 UNC	34(1.34)	14(.55)

Step Response

These characteristics have been obtained by measuring on each valve. Therefore, they may vary according to a hydraulic circuit to be used.

Viscosity: 30 mm²/s (141 SSU)

Flow Controls

EFBG-03

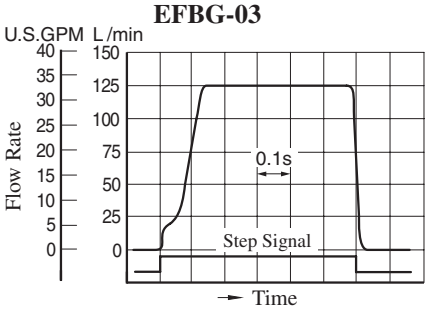

EFBG-06

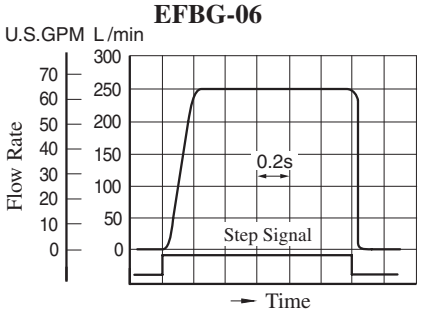

EFBG-10

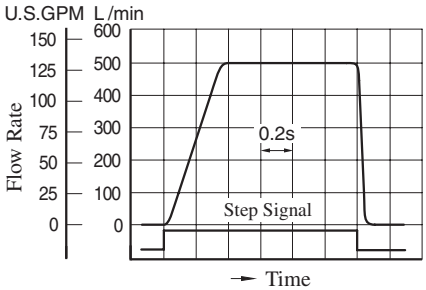

Pressure Controls

EFBG-03

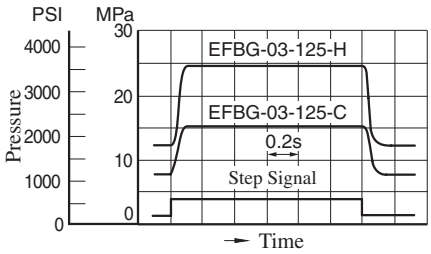

Flow Rate : 125 L/min (33 U.S.GPM)
Trapped Oil Volume : < 1 L (.264 U.S.Gallons)

EFBG-06

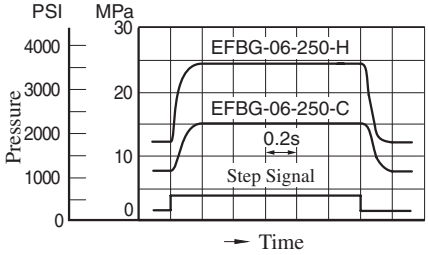

Flow Rate : 250 L/min (66 U.S.GPM)
Trapped Oil Volume : < 1 L (.264 U.S.Gallons)

EFBG-10

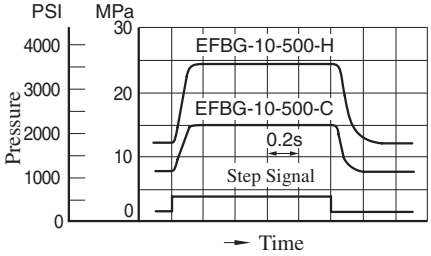

Flow Rate : 500 L/min (132 U.S.GPM)
Trapped Oil Volume : < 1 L (.264 U.S.Gallons)

Input Current vs. Flow

Viscosity: 30 mm²/s (141 SSU)

EFBG-03

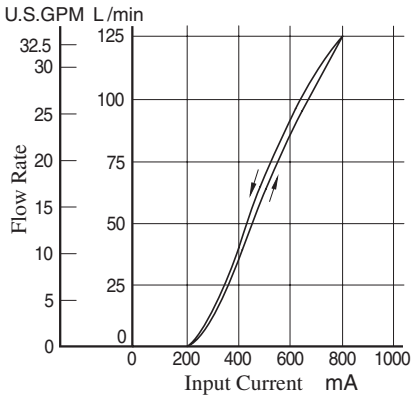

EFBG-06

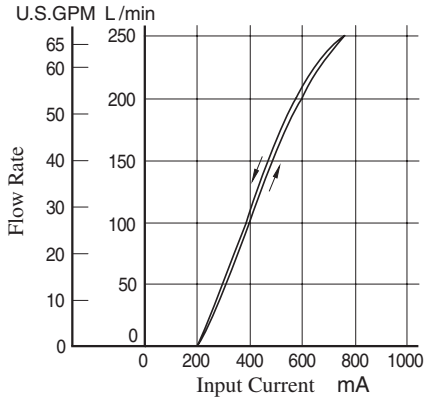

EFBG-10

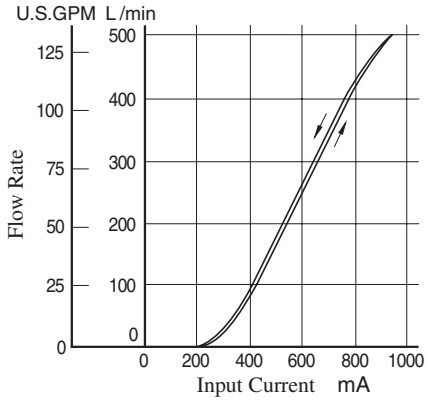

Input Current vs. Pressure

Viscosity: 30 mm²/s (141 SSU)

EFBG-03

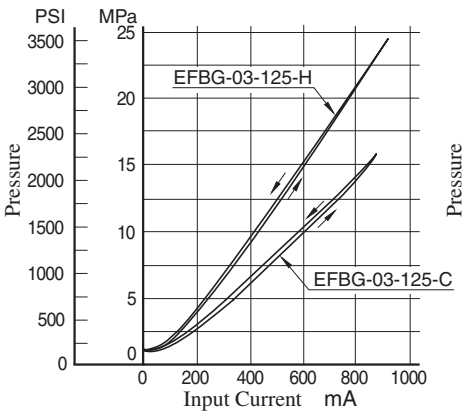

EFBG-06

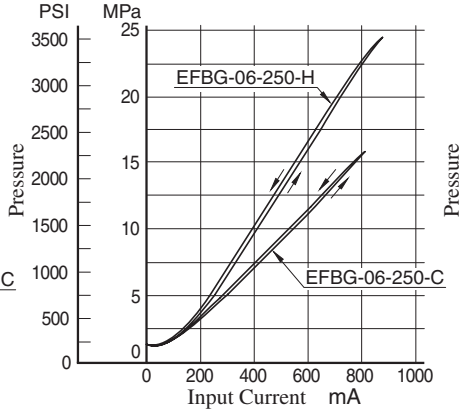

EFBG-10

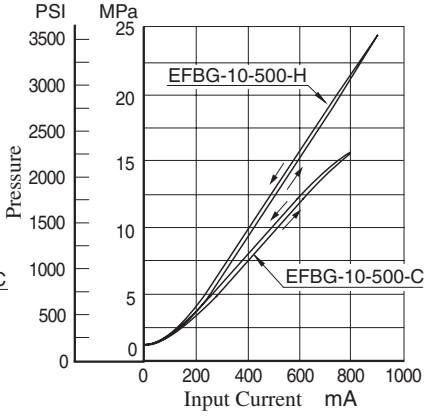

List of Seals and Solenoid Ass'y

EFBG-03-125-∗-∗-61/6190
EFBG-06-250-∗-∗-61/6190

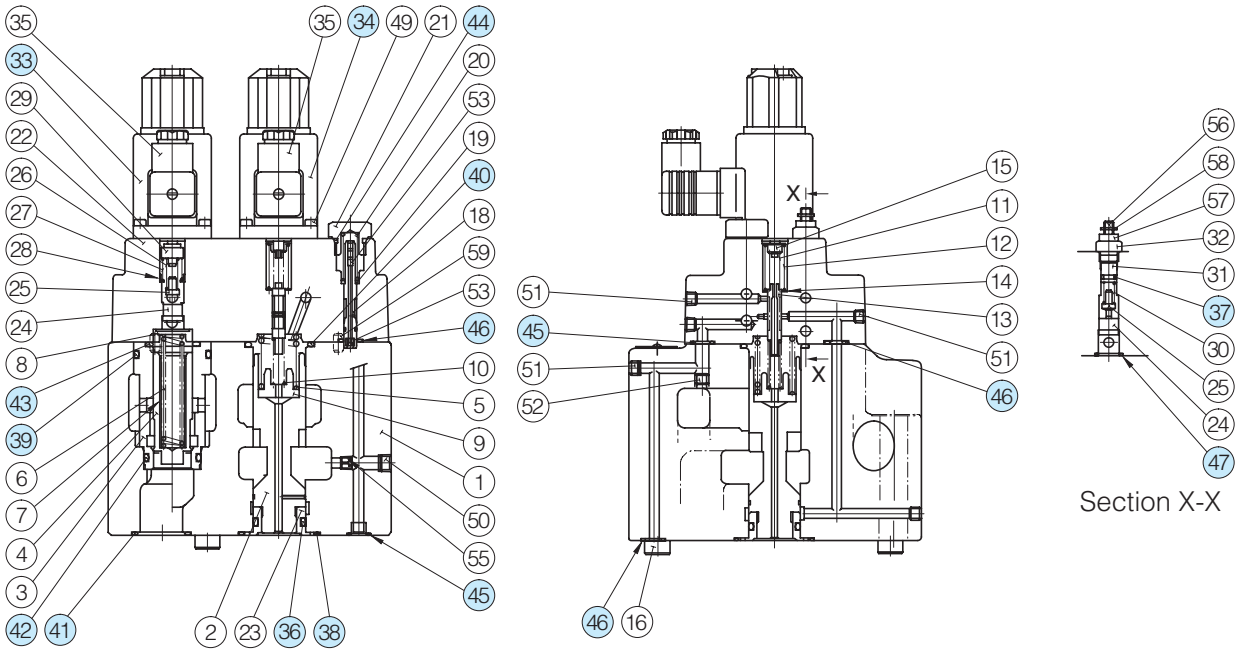

List of Seals

Item	Name of Parts	EFBG-03		EFBG-06	
		Part Numbers	Qty.	Part Numbers	Qty.
36	O-Ring	SO-NA-A016	1	SO-NA-P26	1
37	O-Ring	SO-NA-P6	1	SO-NA-P6	1
38	O-Ring	SO-NB-P28	1	SO-NB-P44	1
39	O-Ring	SO-NB-P32	1	SO-NB-P42	1
40	O-Ring	SO-NB-P28	1	SO-NB-P36	1
41	O-Ring	SO-NB-P28	3	SO-NB-P32	3
42	O-Ring	SO-NB-G30	1	SO-NB-P30	1
43	O-Ring	SO-NB-P28	1	SO-NB-P28	1
44	O-Ring	SO-NB-P15	1	SO-NB-P15	1
45	O-Ring	SO-NB-P11	2	SO-NB-P11	2
46	O-Ring	SO-NB-P9	5	SO-NB-P11	4
47	O-Ring	SO-NB-A016	1	SO-NB-A016	1

Note: When ordering seals, please specify the seal kit number from the table right.
In addition to the above o-rings, seals for solenoid ass'y are included in the seal kit.
For the details of seals for solenoid ass'y (33) and (34) see page 674.

List of Seal Kits

Valve Model Numbers	Seal Kit Numbers
EFBG-03-125-61∗	KS-EFBG-03-61
EFBG-03-125-C/H-61∗	KS-EFBG-03-C-61
EFBG-06-250-61∗	KS-EFBG-06-61
EFBG-06-250-C/H-61∗	KS-EFBG-06-C-61

Solenoid Ass'y

Valve Model Numbers	(33) Solenoid Ass'y Model Numbers	(34) Solenoid Ass'y Model Numbers
EFBG-03-125-C/H(-E)-61/6190	E318-Y06M1-04-61	E318-Y06M1-28-61
EFBG-06-250-C/H(-E)-61/6190		
EFBG-03-125(-E)-61/6190 EFBG-06-250(-E)-61/6190	——	

Note: The connector assembly GDM-211-B-11 (Item 35) is not included in the solenoid assembly.

List of Seals, Pilot Valves, Solenoid Ass'y and Safety Valve

EFBG-10-500- ∗-∗-51/5190

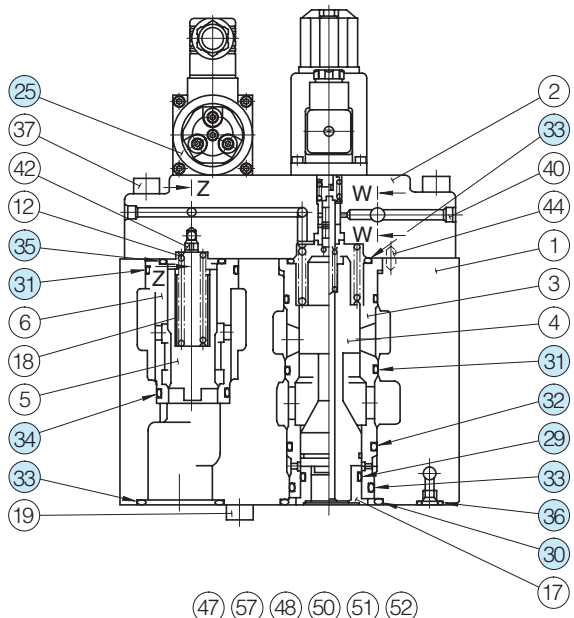

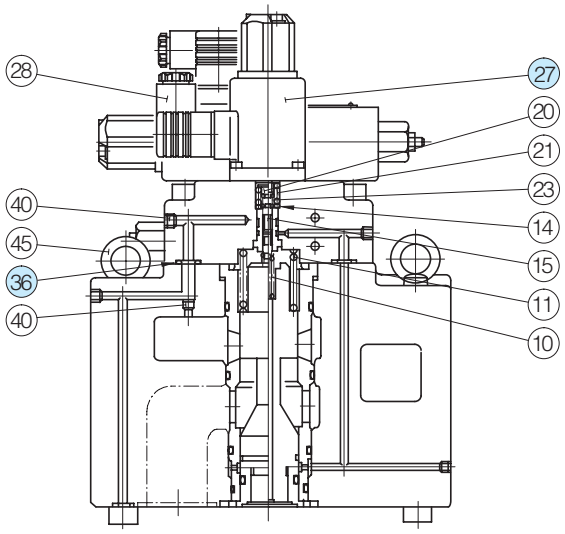

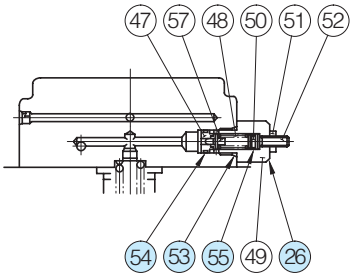

Section W-W

(Only for Models without Pilot Relief Valve)

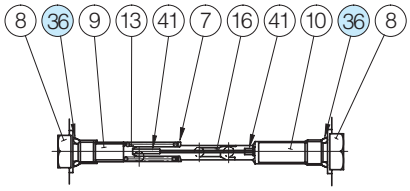

Section Z-Z

List of Seals

Item	Name of Parts	Part Numbers	Qty.	
			Models with Pilot Relief Valve	Models without Pilot Relief Valve
29	O-Ring	SO-NA-P34	1	1
30	O-Ring	SO-NB-G60	1	1
31	O-Ring	SO-NB-G55	3	3
32	O-Ring	SO-NB-P50	1	1
33	O-Ring	SO-NB-P48	5	5
34	O-Ring	SO-NB-P42	1	1
35	O-Ring	SO-NB-P36	1	1
36	O-Ring	SO-NB-P11	8	8
53	O-Ring	SO-NB-P14	—	1
54	O-Ring	SO-NB-A013	—	1
55	O-Ring	SO-NA-P6	—	1

List of Seal Kits

Valve Model Numbers	Seal Kit Numbers
EFBG-10-500-51∗	KS-EFBG-10-51
EFBG-10-500-C/H-51∗	KS-EFBG-10-C-51

Note: When ordering seals, please specify the seal kit number from the table right. In addition to the above o-rings, seals for pilot valve and solenoid ass'y are included in the seal kit.
For the detail of the pilot valve and solenoid ass'y seals, see page 674.

Pilot Valve, Solenoid Ass'y and Safety Valve

Valve Model Numbers	㉕ Pilot Valve Model Numbers	㉗ Solenoid Ass'y Model No.	㉖ Safety Valve Model No.
EFBG-10-500-C(-E)-51/5190	EDG-01V-C-1-PNT12-5103	E318-Y06M1-28-61	——
EFBG-10-500-H(-E)-51/5190	EDG-01V-H-1-PNT12-5103		——
EFBG-10-500(-E)-51/5190	——		SB1094-2002

Note: The connector assembly GDM-211-B-11 (Item 28) is not included in the solenoid assembly.

Interchangeability between Current and New Design

Model changes have been made from 50, 51 to 61 design in the EFBG-03/06 because of changes in the pilot valve building-in method and model changes have been made from 50 to 51 design in the EFBG-10 because of improvement in Solenoid Ass'y.

- **Specification and Characteristics**

No changes in specifications and characteristics between current and new design

- **Interchangeability in Installation**
- EFBG-03/06

50∗ • 51∗ Design →61∗ Design

The mounting surface are interchangeable. However, the method of building in the pilot valve has been changed, bringing about changes in the appearance shapes and dimensions as shown below.

Current : Design 50 • 51

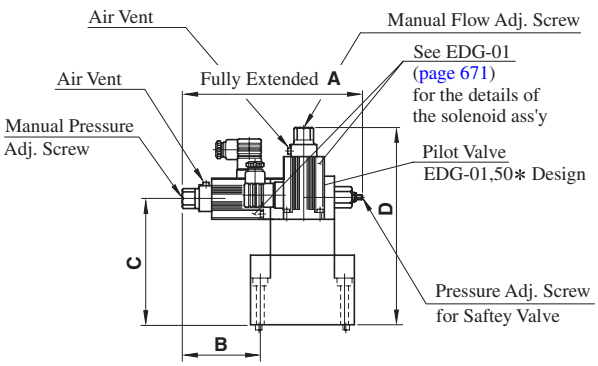

New : Design 61

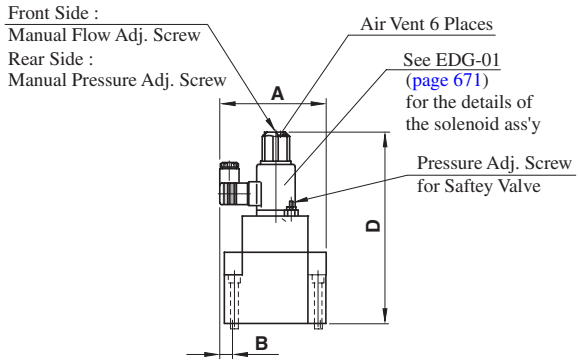

Model Numbers	A	B	C	D
(Current) EFBG-03-125-∗-∗-50/5090 51/5190	217 (8.54)	93.2 (3.67)	155 (6.10)	236.5 (9.31)
(New) EFBG-03-125-∗-∗-61/6190	132 (5.20)	18.7 (.74)	—	248.5 (9.78)
(Current) EFBG-06-250-∗-∗-50/5090 51/5190	217 (8.54)	53.3 (2.10)	196 (7.72)	277.5 (10.93)
(New) EFBG-06-250-∗-∗-61/6190	180 (7.09)	—	—	289.5 (11.40)

60∗ Design →61∗ Design

The mounting surface are interchangeable. There are no changes in the appearance shapes and dimensions.

- EFBG-10

Mounting compatibility is provided.
Note that because of improvements made on the solenoids, the overall shapes have been changed as shown below.

Current : Design 50

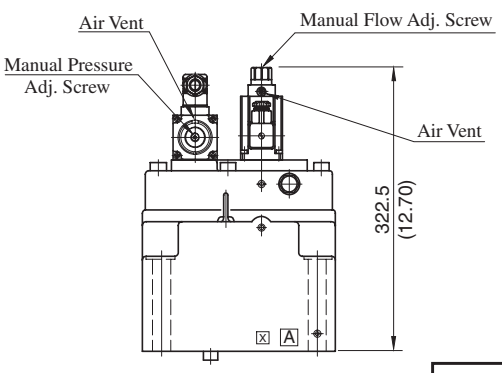

New : Design 51

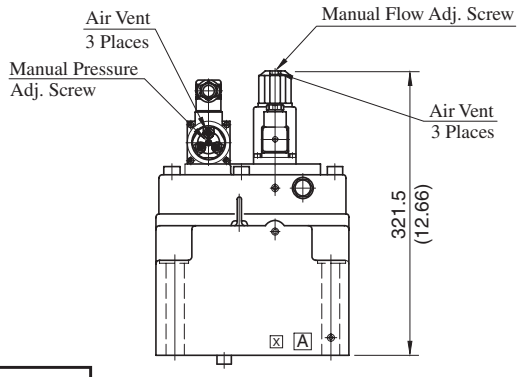

DIMENSIONS IN MILLIMETRES (INCHES)

High Flow Series Proportional Electro-Hydraulic Flow Control and Relief Valves

This flow control and relief valve is an energy-saving valve that supplies the minimum pressure and flow necessary for actuator drive.
For the High Flow Series, double maximum flow rate [03 size: 125→250 L/min (33.03→66.05 U.S.GPM), 06 size: 250→500 L/min (66.05→132.1 U.S.GPM), 10 size: 500→1000 L/min (132.1→264.2 U.S.GPM)] enables a smaller valve size than conventional products; compact-sized devices can be provided.

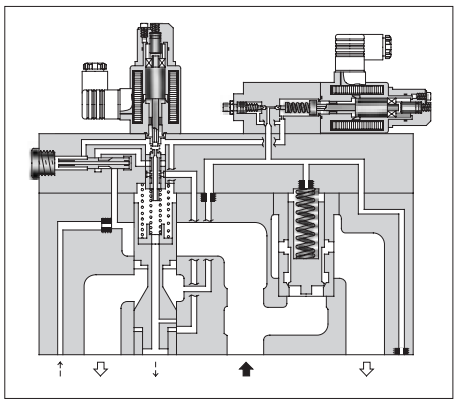

Specifications

Description \ Model No.		EFBG-03 -250-∗-∗-51∗	EFBG-06 -500-∗-∗-51∗	EFBG-10 -1000-∗-∗-51∗
Max. Operating Pressure MPa (PSI)		24.5 (3550)	24.5 (3550)	24.5 (3550)
Max. Flow L/min (U.S.GPM)		250 (66)	500 (132)	1000 (264)
Metred Flow Adjustment Range L/min (U.S.GPM)		2.5-250 (.66-66)	5-500 (1.32-132)	10-1000 (2.64-264)
Min. Pilot Pressure MPa (PSI)		1.5 (220)	1.5 (220)	1.5 (220)
Pilot Flow L/min (U.S.GPM)	at Normal	1 (.26)	1 (.26)	4.5 (1.19)
	at Transition	4 (1.06)	6 (1.59)	10.0 (2.64)
Flow Controls	Rated Currnt	830 mA	780 mA	830 mA
	Coil Resistance	10 Ω	10 Ω	10 Ω
	Differential Pressure MPa (PSI)	0.8 (115)	0.9 (130)	1.2 (174)
	Hysteresis	3% or less	3% or less	3% or less
	Repeatability	1% or less	1% or less	1% or less
Pressure Controls ★1	Pres. Adj. Range MPa (PSI) ★2	C: 1.6-15.7 (230-2275) H: 1.8-24.5 (260-3550)	C: 1.5-15.7 (220-2275) H: 1.5-24.5 (220-3550)	C: 1.1-15.7 (160-2275) H: 1.1-24.5 (160-3550)
	Rated Current	C: 850 mA H: 870 mA	C: 800 mA H: 900 mA	C: 900 mA H: 950 mA
	Coil Resistance	10 Ω	10 Ω	10 Ω
	Hysteresis	3% or less	3% or less	3% or less
	Repeatability	1% or less	1% or less	1% or less
Approx. Mass kg (lbs.)		Refer to page 735 to 737		

★1. The specifications for pressure controls are applied to models with proportional pilot relief valve. (Ex. EFBG-03-250-C-∗-51)
★2. The maximum pressure adjustment range of the valves without proportional pilot relief valves is 24.5 MPa (3550 PSI).

Graphic Symbols

With Proportional Pilot Relief Valve

External Pilot

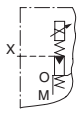

Internal Pilot

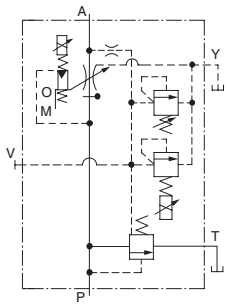

Without Proportional Pilot Relief Valve

External Pilot

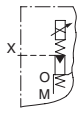

Internal Pilot

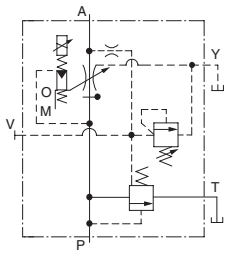

Model Number Designation

F-	EFB	G	-03	-250	-C	-E	-51	*
Special Seals	Series Number	Type of Mounting	Valve Size	Max. Metred Flow L/min (U.S.GPM)	Proportional Pilot Relief Valve Pressure Adj. Range	Pilot Connection	Design Number	Design Standards
F: Special Seals for Phosphate Ester Type Fluid (Omit if not required)	**EFB**: Proportional Electro-Hydraulic Flow Control and Relief Valve	**G**: Sub-plate Mounting	**03**	**250**: 250 (66)	**C, H**: See Specifications **None**: Without Proportional Pilot Relief Valve	**None**: Internal Pilot **E**: External Pilot	**51**	Refer to ★
			06	**500**: 500 (132)			**51**	
			10	**1000**: 1000 (264)			**51**	

★ Design Standards: None ..... Japanese Standard "JIS" and European Design Standard
90 ..... N. American Design Standard

Attachment

Mounting Bolts

Valve Model Numbers	Socket Head Cap Screw		Qty.
	Japanese Std. "JIS" and European Design Std.	N. American Design Std.	
EFBG-03	M12 × 120 Lg.	1/2-13 UNC × 4-3/4 Lg.	4
EFBG-06	M16 × 120 Lg.	5/8-11 UNC × 4-3/4 Lg.	4
EFBG-10	M20 × 150 Lg.	3/4-10 UNC × 6 Lg.	4

Applicable Power Amplifiers

For stable performance, it is recommended that Yuken's applicable power amplifiers be used (for details see page 767, 771).

Model Numbers	Power Amplifier Model Numbers	
	For Flow Control	For Pres. Control
EFBG-03-250(-E)-51/5190 EFBG-06-500(-E)-51/5190 EFBG-10-1000(-E)-51/5190	AME-D-10-*-20 AMN-D-10 (For DC power supply)	—
EFBG-03-250-C/H(-E)-51/5190 EFBG-06-500-C/H(-E)-51/5190 EFBG-10-1000-C/H(-E)-51/5190	AME-D2-1010-11	

Instructions

Drain Back Pressure

Check that the drain back pressure dose not exceed 0.2 MPa (29 PSI).

When Relief Valve Passing Flow Rate is Low in Pressure Control State

To avoid preselected pressure instability, use a passing flow rate of 15 L/min (4.0 U.S.GPM) or higher.
Further, check that the tank-line back pressure dose not exceed 0.5 MPa (70 PSI).

Safety Valve Pressure Setting

The pressure of the safety valve is preset at the value equal to the upper limit of the pressure adjustment range plus 2 MPa (290 PSI). Please adjust the pressure of the valve so preset to meet the pressure to be used actually.
To lower the pressure setting, turn the safety valve pressure adjustment screw anti-clockwise. After adjustment, be sure to tighten the lock nut.

Interchangeability in installation with conventional valves (10Ω-10Ω Series)

- EFBG-03

There is no interchangeability in installation.

- EFBG-06/10

A product in the high-flow series can be mounted on the conventional mounting surface but no conventional product can be mounted on the mounting surface of the high-flow series.

EFBG-03-250-$^{C}_{H}$(-E)-51/5190, EFBG-03-250 (-E)-51/5190

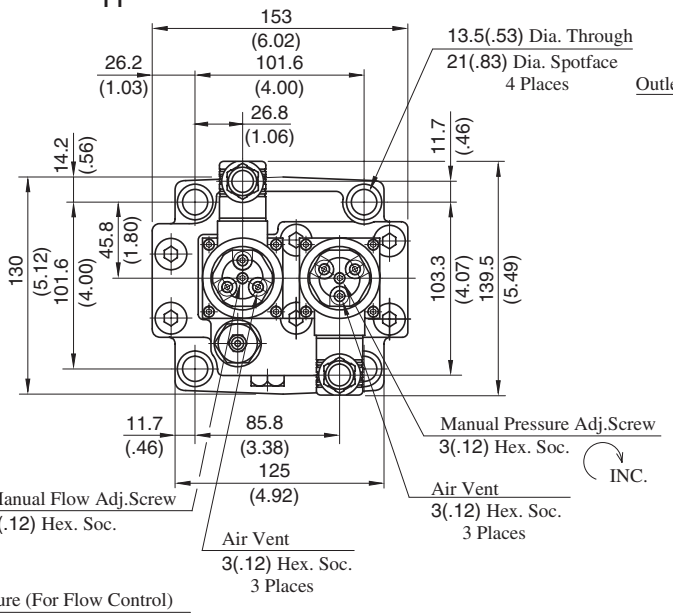

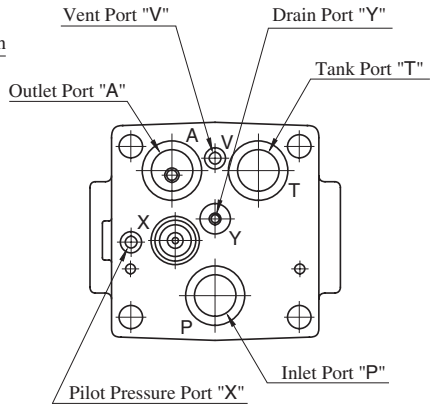

View Arrow Z

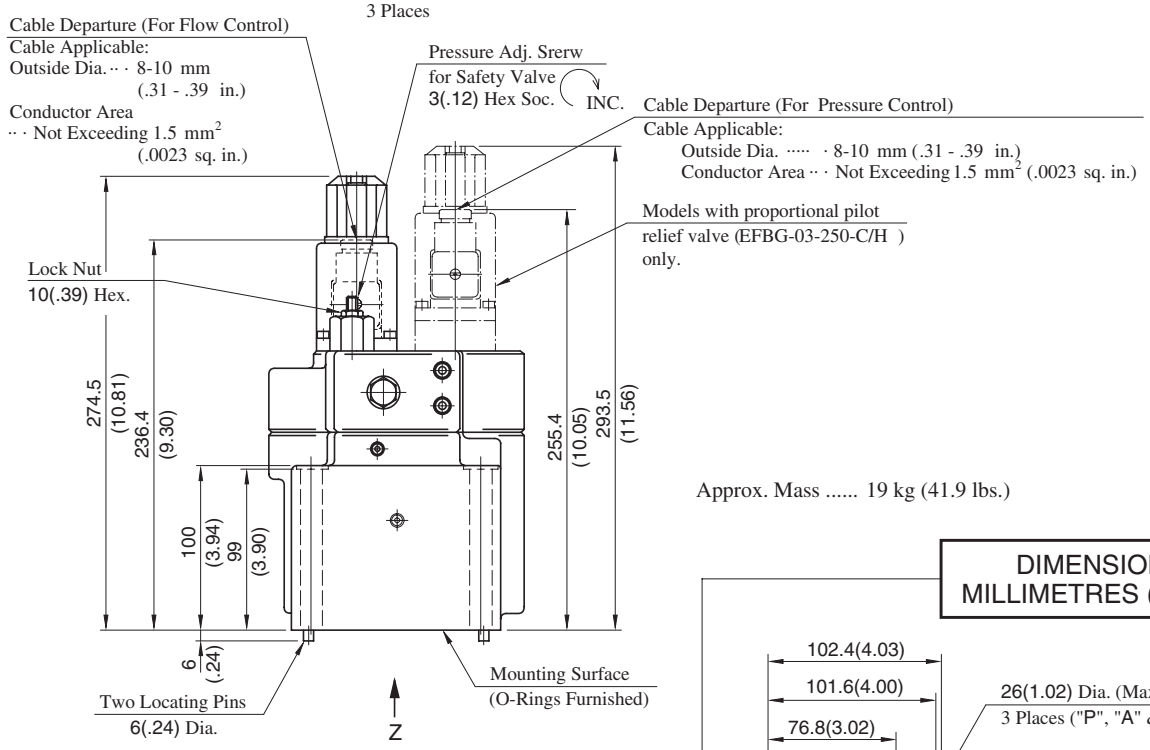

Approx. Mass ..... 19 kg (41.9 lbs.)

DIMENSIONS IN MILLIMETRES (INCHES)

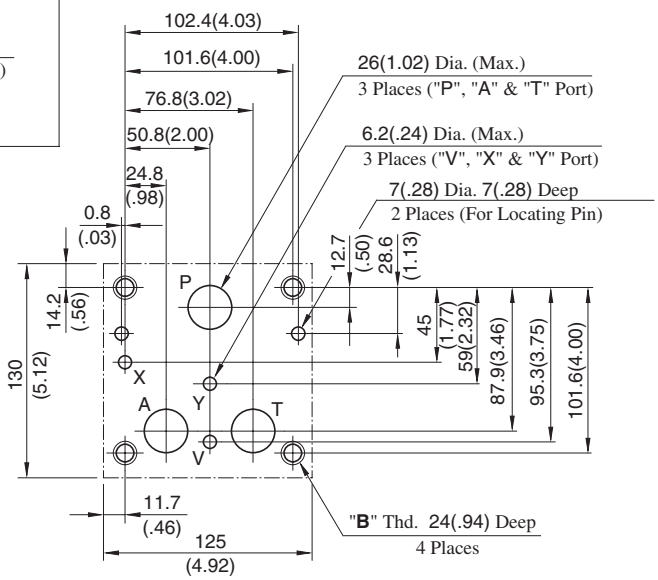

Dimensions of valve mounting surface

Prepare a mounting surface as shown to the right.
Also finish it finely.

Model Numbers	"B" Thd.
EFBG-03-250-∗-∗-51	M12
EFBG-03-250-∗-∗-5190	1/2-13 UNC

Models with Proportional Pilot Relief Valve

EFBG-06-500-$^{C}_{H}$(-E)-51/5190

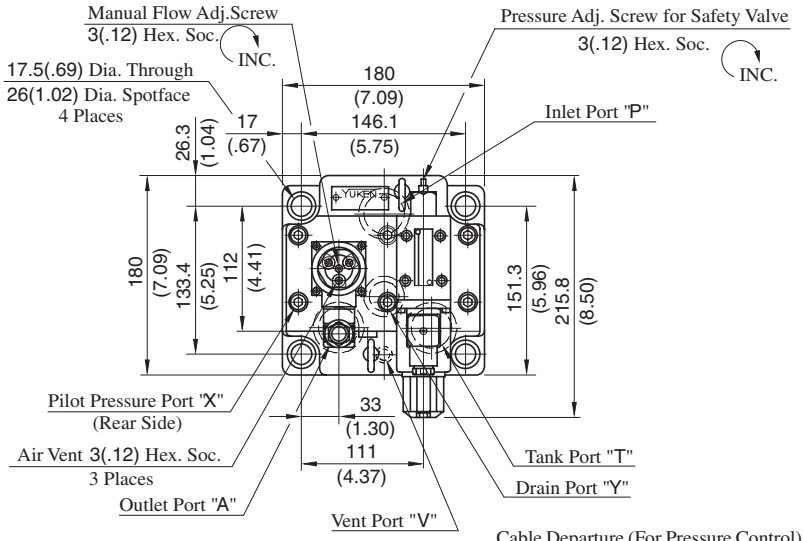

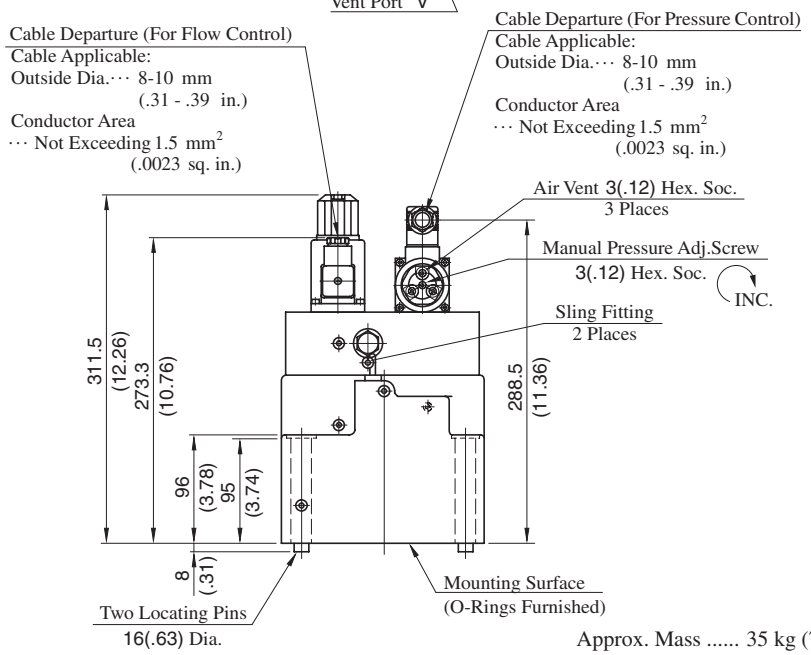

Approx. Mass ..... 35 kg (77.2 lbs.)

Models without Proportional Pilot Relief Valve

EFBG-06-500(-E)-51/5190

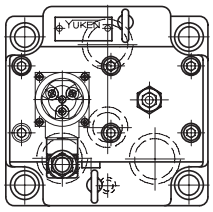

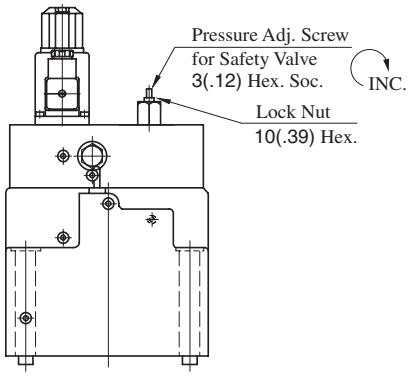

- For other dimensions, please refer to the models with Proportional Pilot Relief Valve.

Approx. Mass ..... 33 kg (72.8 lbs.)

DIMENSIONS IN MILLIMETRES (INCHES)

Dimensions of valve mounting surface

Prepare a mounting surface as shown to the right.
Also finish it finely.

Model Numbers	"B" Thd.	C mm (in.)
EFBG-06-500-∗-∗-51	M16	30 (1.18)
EFBG-06-500-∗-∗-5190	5/8-11 UNC	35 (1.38)

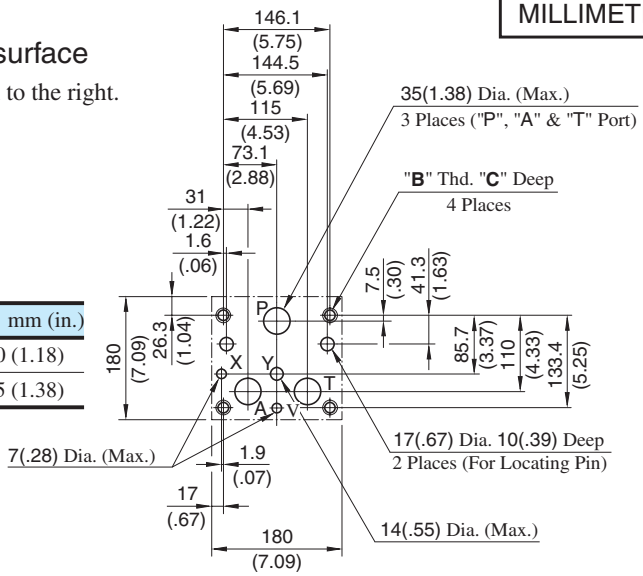

Models with Proportional Pilot Relief Valve

EFBG-10-1000-$^{C}_{H}$(-E)-51/5190

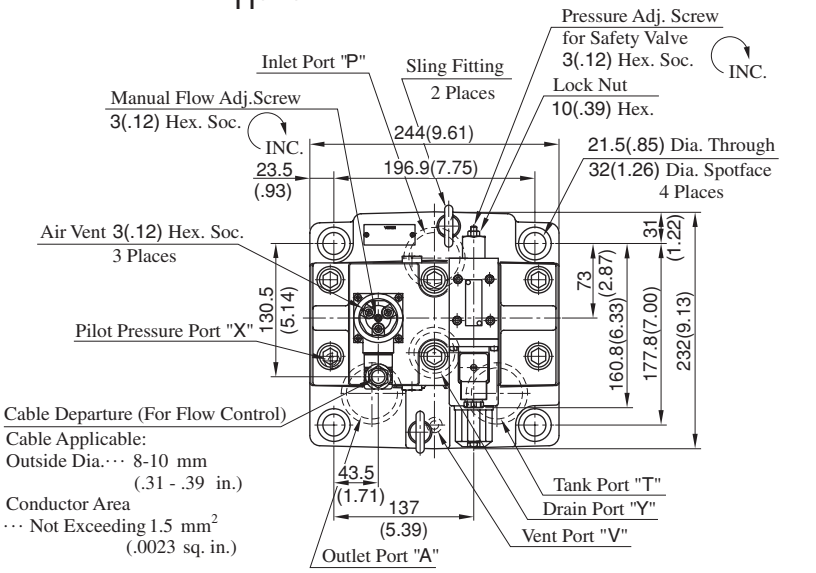

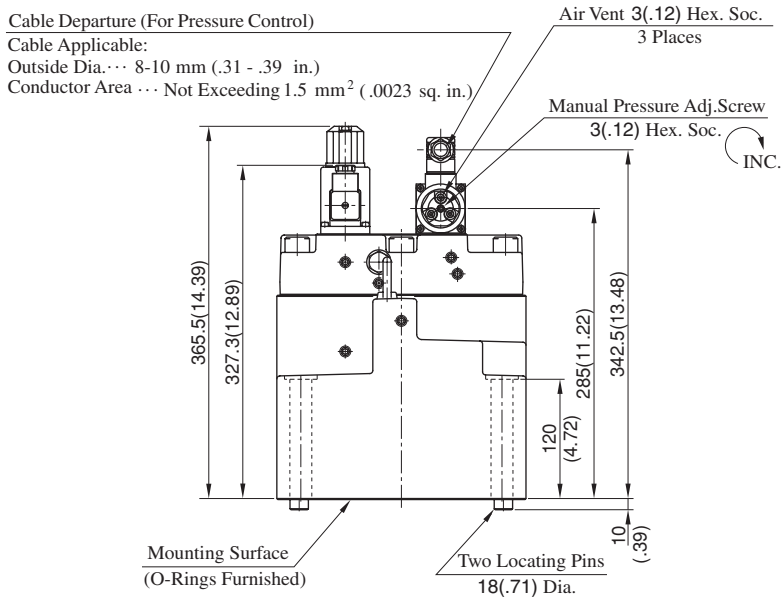

Approx. Mass ..... 76 kg (167.6 lbs.)

Models without Proportional Pilot Relief Valve

EFBG-10-1000(-E)-51/5190

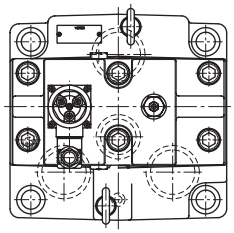

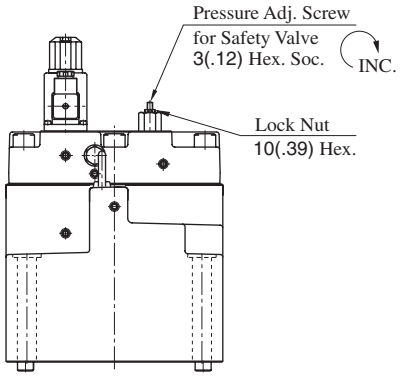

- For other dimensions, please refer to the models with Proportional Pilot Relief Valve.

Approx. Mass ..... 74 kg (163.1 lbs.)

DIMENSIONS IN MILLIMETRES (INCHES)

Dimensions of valve mounting surface

Prepare a mounting surface as shown to the right. Also finish it finely.

Model Numbers	"B" Thd.	C mm (in.)
EFBG-10-1000-∗-∗-51	M20	32 (1.26)
EFBG-10-1000-∗-∗-5190	3/4-10 UNC	35 (1.38)

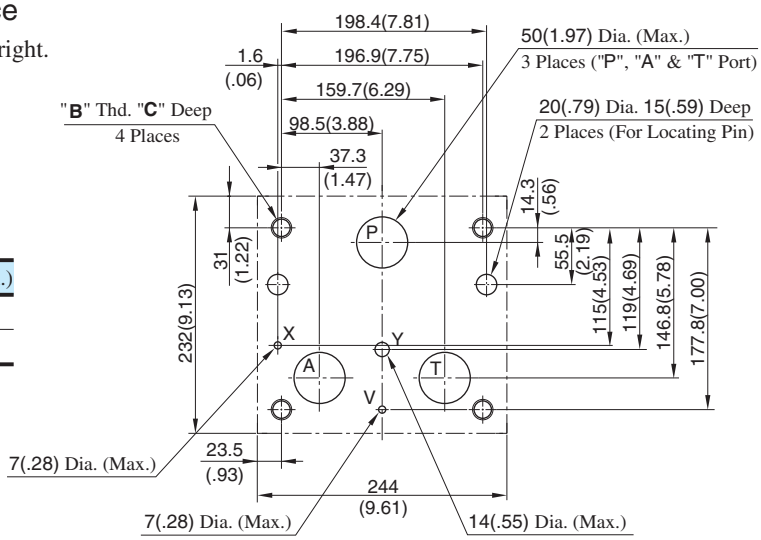

Step Response

Viscosity: 30mm²/s (141 SSU)

These characteristics have been obtained by measuring on each valve. Therefore , they may vary according to a hydraulic circuit to be used.

Flow Controls

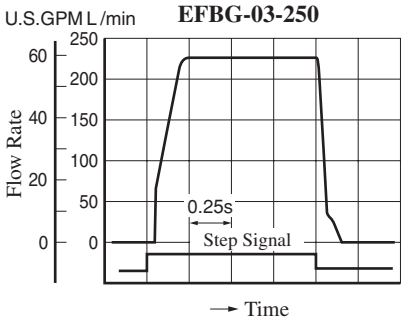

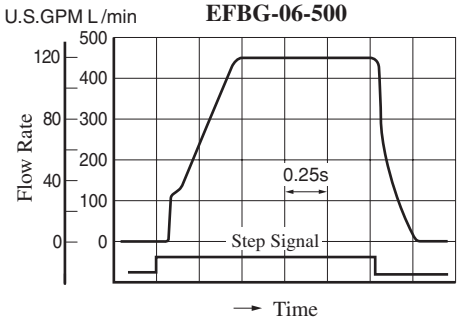

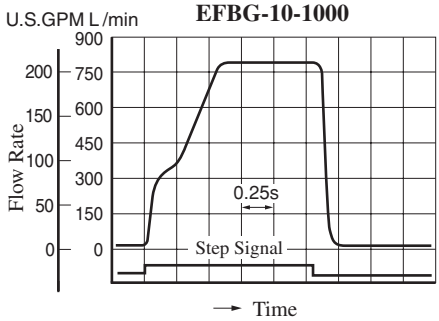

Pressure Controls

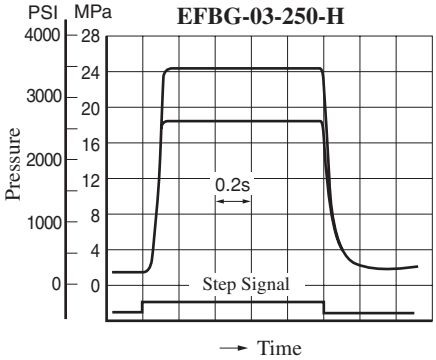

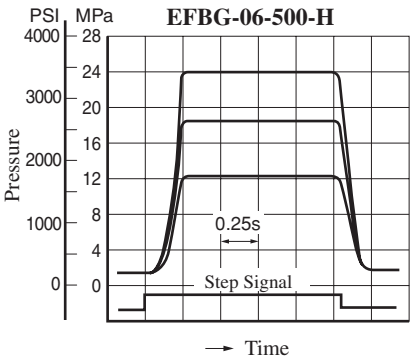

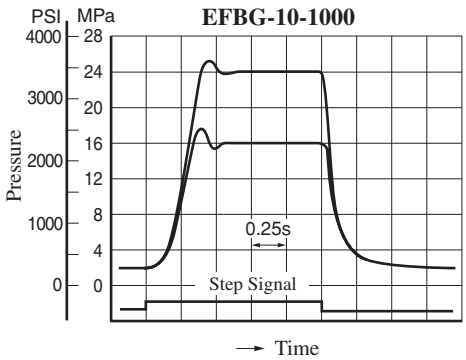

Input Current vs. Flow

Viscosity: 30mm²/s (141 SSU)

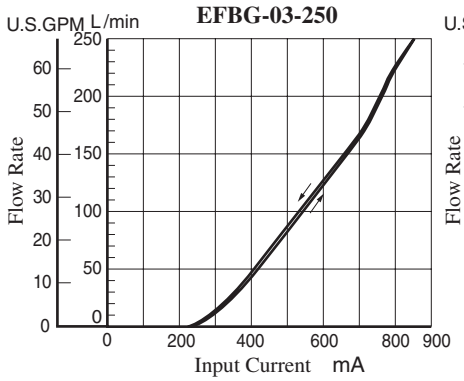

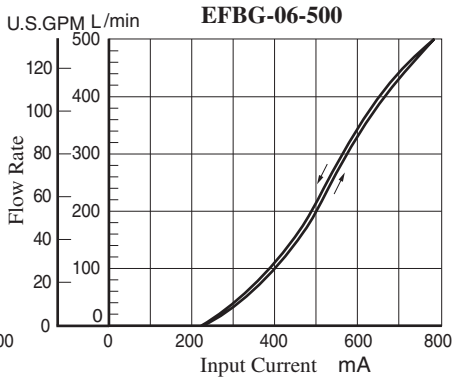

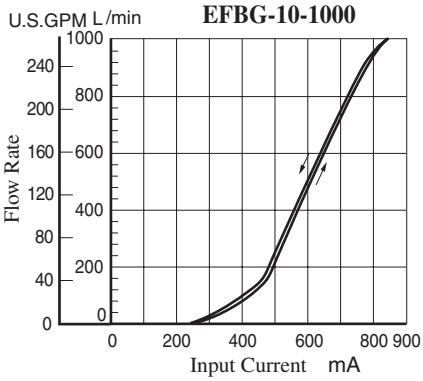

Input Current vs. Pressure

Viscosity: 30mm²/s (141 SSU)

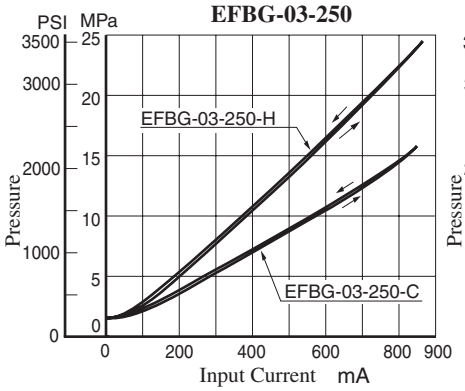

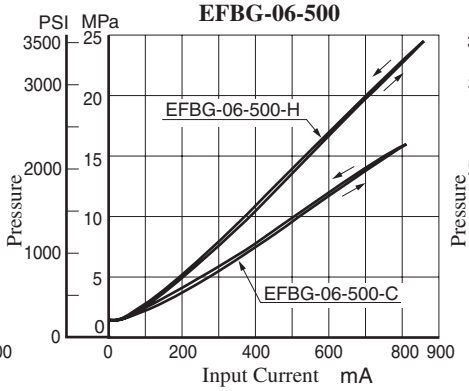

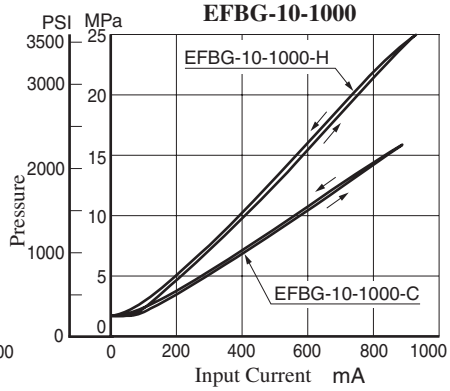

List of Seals, Solenoid Ass'y and Safety Valve

EFBG-03-250- ∗-∗-51/5190

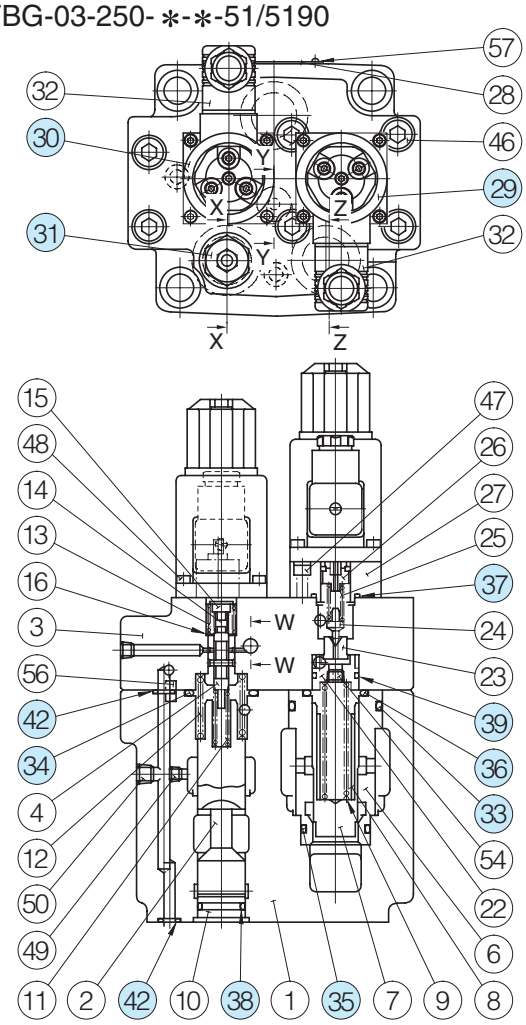

Detail of Safety Valve
(Item 31)

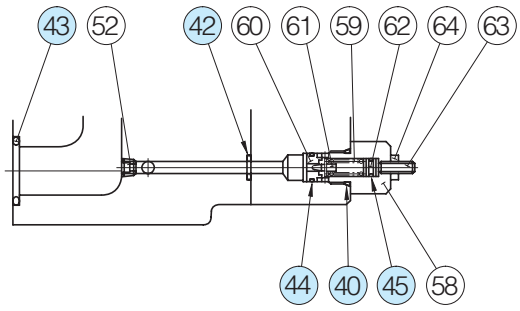

Section X-X

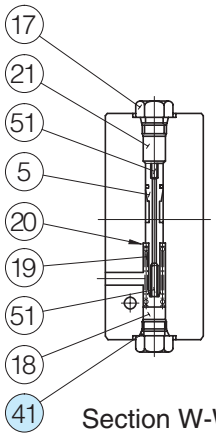

Section W-W

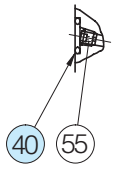

Section Y-Y

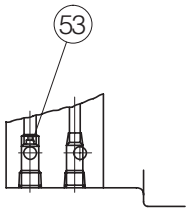

Section Z-Z

List of Seals

Item	Name of Parts	Part Numbers	Qty.
33	O-Ring	SO-NB-P42	1
34	O-Ring	SO-NB-P32	1
35	O-Ring	SO-NB-P30	1
36	O-Ring	SO-NB-P28	1
37	O-Ring	SO-NB-P22	1★
38	O-Ring	SO-NB-P21	1
39	O-Ring	SO-NB-P20	1★
40	O-Ring	SO-NB-P14	2
41	O-Ring	SO-NB-P11	2
42	O-Ring	SO-NB-P9	6
43	O-Ring	SO-NB-G30	3
44	O-Ring	SO-NB-A013	1
45	O-Ring	SO-NA-P6	1

★ O-rings, item 37 and 39, are used only with the proportional pilot relief valve (EFBG-03-250-C/H).

Note: When ordering seals, please specify the seal lit number from the table right.
In addition to the above o-rings, seals for solenoid ass'y are included in the seal kit.
For the detail of seals for solenoid ass'y seals, see page 674.

List of Seal Kits

Valve Model Numbers	Seal Kit Numbers
EFBG-03-250-51∗	KS-EFBG-03-250-51
EFBG-03-250-C/H-51∗	KS-EFBG-03-250-C-51

Solenoid Ass'y and Safety Valve

Valve Model Numbers	㉙ Solenoid Ass'y Model No.	㉚ Solenoid Ass'y Model No.	㉛ Safety Valve Model No.
EFBG-03-250-C/H(-E)-51/5190	E318-Y06M1-04-61	E318-Y06M1-28-61	SB1094-2002
EFBG-03-250(-E)-51/5190	——		

Note: The connector assembly GDM-211-B-11 (Item 32) is not included in the solenoid assembly.

List of Seals, Pilot Valves, Solenoid Ass'y and Safety Valve

EFBG-06-500- ∗-∗-51/5190

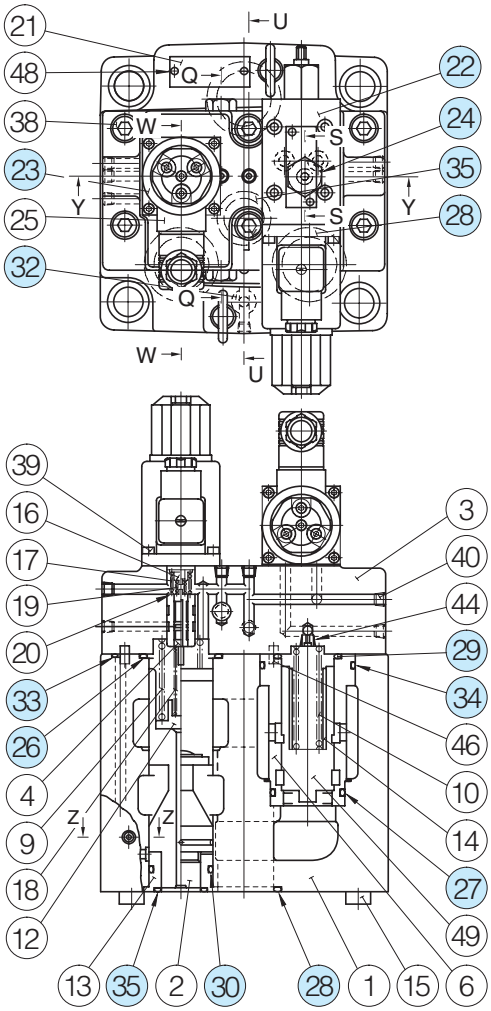

Detail of Safety Valve (Item 24)

Models Without Pilot Relief Valve : EFBG-06-500(-E)

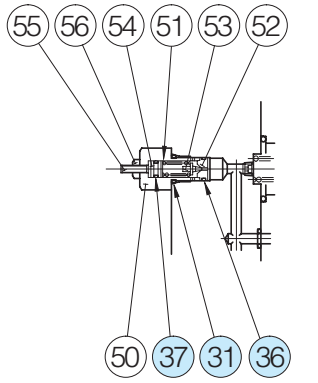

Section S-S

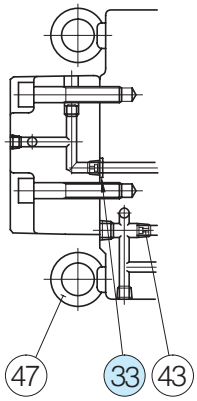

Section U-U

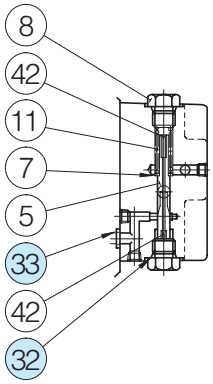

Section Q-Q

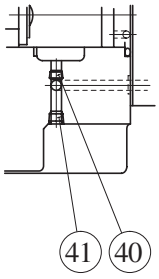

Section W-W

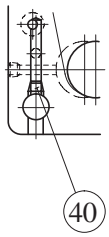

Section Z-Z

List of Seals

Item	Name of Parts	Part Numbers	Qty.
26	O-Ring	SO-NB-P46	1
27	O-Ring	SO-NB-P42	1
28	O-Ring	SO-NB-P40	3
29	O-Ring	SO-NB-P36	1
30	O-Ring	SO-NB-P34	1
31	O-Ring	SO-NB-P14	1★
32	O-Ring	SO-NB-P11	4
33	O-Ring	SO-NB-P9	4
34	O-Ring	SO-NB-G55	1
35	O-Ring	SO-NB-G30	2
36	O-Ring	SO-NB-AO13	1★
37	O-Ring	SO-NA-P6	1★

★ O-rings, item 31, 36 and 37, are used only without the proportional pilot relief valve [(EFBG-06-500(-E)].

Note: When ordering seals, please specify the seal lit number from the table right. In addition to the above o-rings, seals for pilot valve and solenoid ass'y are included in the seal kit.
For the detail of the pilot valve and solenoid ass'y seals, see page 674.

List of Seal Kits

Valve Model Numbers	Seal Kit Numbers
EFBG-06-500-51∗	KS-EFBG-06-500-51
EFBG-06-500-C/H-51∗	KS-EFBG-06-500-C-51

Pilot Valve, Solenoid Ass'y and Sefety Valve

Valve Model Numbers	㉒ Pilot Valve Model Numbers	㉓ Solenoid Ass'y Model No.	㉔ Safety Valve Model No.
EFBG-06-500-C(-E)-51/5190	EDG-01V-C-1-PNT11-5103	E318-Y06M1-28-61	——
EFBG-06-500-H(-E)-51/5190	EDG-01V-H-1-PNT11-5103		——
EFBG-06-500(-E)-51/5190	——		SB1094-2002

Note: The connector assembly GDM-211-B-11 (Item 25) is not included in the solenoid assembly.

List of Seals, Pilot Valves, Solenoid Ass'y and Safety Valve

EFBG-10-1000-∗-∗-51/5190

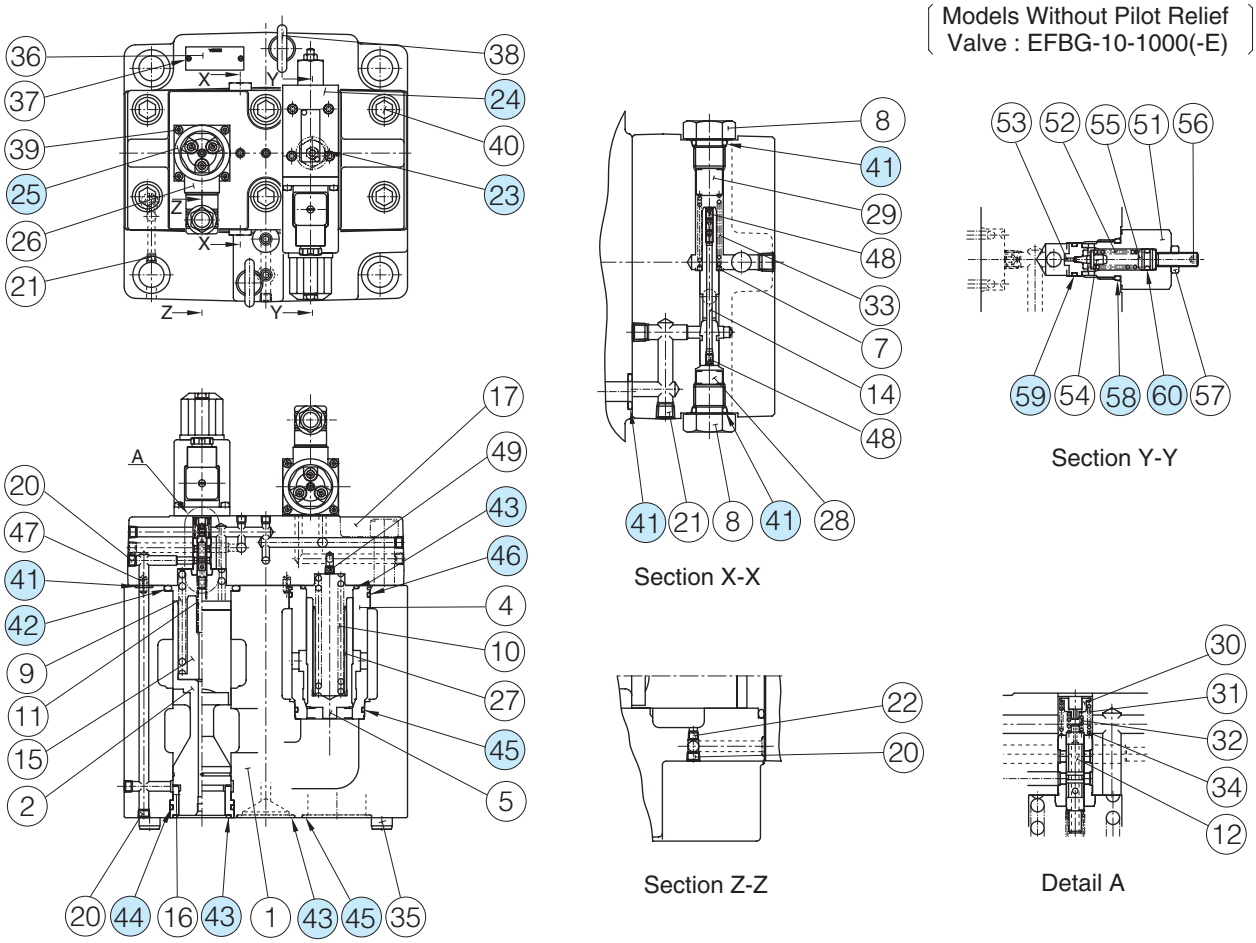

List of Seals

Item	Name of Parts	Part Numbers	Qty.
41	O-Ring	JIS-B 2401-1B-P11	8
42	O-Ring	JIS-B 2401-1B-P55	1
43	O-Ring	JIS-B 2401-1B-G45	3
44	O-Ring	JIS-B 2401-1B-G50	1
45	O-Ring	JIS-B 2401-1B-G55	4
46	O-Ring	JIS-B 2401-1B-G65	1
58	O-Ring	JIS-B 2401-1B-P14	1★
59	O-Ring	AS568-013(NBR, Hs90)	1★
60	O-Ring	JIS-B 2401-1A-P6	1★

★ O-rings, item 58, 59 and 60, are used only without the proportional pilot relief valve [EFBG-10-1000(-E)].

Note: When ordering seals, please specify the seal lit number from the table right. In addition to the above o-rings, seals for pilot valve and solenoid ass'y are included in the seal kit.
For the detail of the pilot valve and solenoid ass'y seals, see page 674.

List of Seal Kits

Valve Model Numbers	Seal Kit Numbers
EFBG-10-1000-51∗	KS-EFBG-10-1000-51
EFBG-10-1000-C/H-51∗	KS-EFBG-10-1000-C-51

Pilot Valve, Solenoid Ass'y and Safety Valve

Valve Model Numbers	㉔ Pilot Valve Model Numbers	㉕ Solenoid Ass'y Model No.	㉓ Safety Valve Model No.
EFBG-10-1000-C(-E)-51/5190	EDG-01V-C-1-PNT20-5197	E318-Y06M1-28-61	——
EFBG-10-1000-H(-E)-51/5190	EDG-01V-H-1-PNT20-5197		——
EFBG-10-1000(-E)-51/5190	——		SB1094-2002

Note: The connector assembly GDM-211-B-11 (Item 25) is not included in the solenoid assembly.

Interchangeability between Current and New Design

EFBG-03/06/10 series valves have changed model from 50 to 51 design in line with the model change of solenoid ass'y.

Specifications and Characteristics

No changes in specifications and characteristics between current and new design.

Mounting Interchangeability

There is an interchangeability in the mounting dimensions between current and new design, however, note that because of improvements made on the solenoids, the overall shapes have been changed as shown below.

- EFBG-03

Current : Design 50

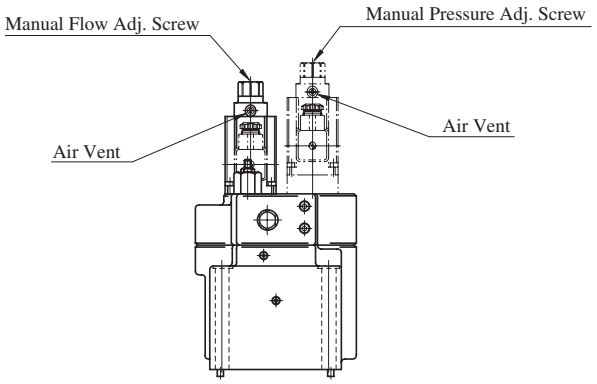

New : Design 51

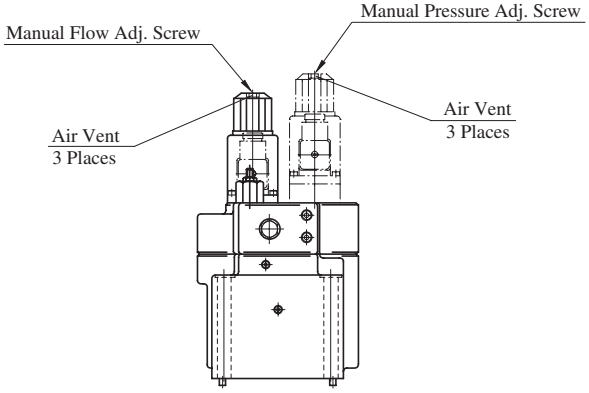

- EFBG-06/10

Current : Design 50

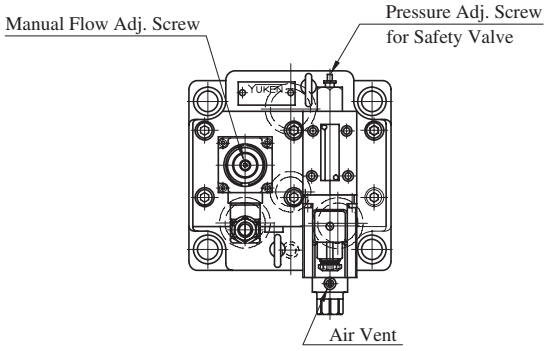

New : Design 51

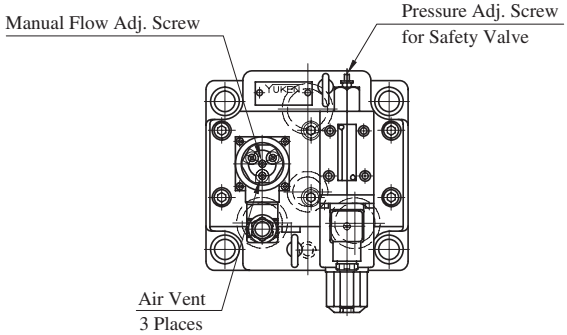

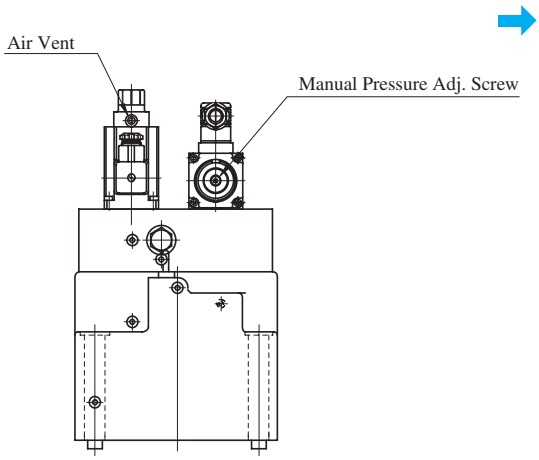

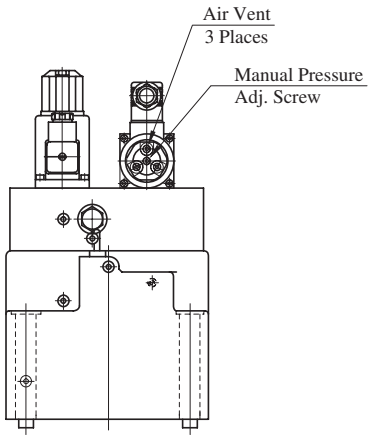

Shockless Type Proportional Electro-Hydraulic Directional and Flow Control Valves

These valves are well accepted by industrial users as shifting time adjustable type shockless valves. By employing the basic design concept of the "G series solenoid operated directional valves", we have been successful developing the shifting time adjustable shockless valves with high performance which makes the speed setting possible at any high speed operation.
In combination with the newly developed digital amplifiers, the further enhancement of maneuverability and repeatability of the valves can be realized.

Specifications

Description \ Model No.		EDFG-01
Max. Operating Pressure MPa (PSI)		25 (3630)
Max. Flow L/min (U.S.GPM)		30 (7.9)
Max. Tank Line Back Pressure MPa (PSI)		14 (2030)
Rated Current		1100 mA
Coil Resistance		10.8 Ω
Hysteresis		5% or less
Repeatability		1% or less
Step Response (Typical Rating) (0 ↔ 100%)		100 ms or less
Frequency Response (50% ±25%)	Phase	20 Hz (–90 degree)
	Gain	25 Hz (–3 dB)
Approx. Mass kg (lbs.)		2.4 (5.3)

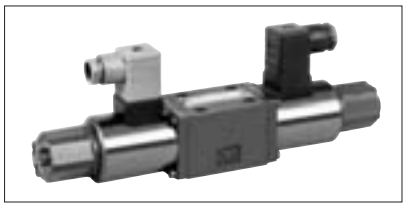

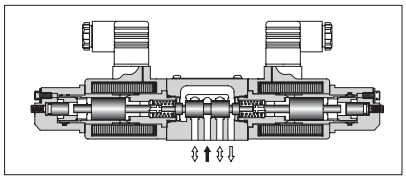

Graphic Symbols

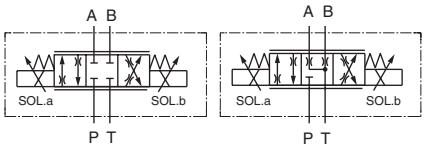

Model Number Designation

F-	EDF	G	-01	-30	-3C2	-XY	-50	*
Special Seals	Series Number	Type of Mounting	Valve Size	Rated Flow L/min (U.S.GPM)	Spool Type	Direction of Flow	Design Number	Design Standards
F: Special Seals for Phosphate Ester Type Fluid (Omit if not required)	**EDF**: Shockless Type Proportional Directional and Flow Control Valve	**G**: Sub-plate Mounting	**01**	**30** (7.9)	**3C2** **3C40**	**XY**: Metre - In • Metre - Out	**50**	Refer to ★1

★1 Design Standards: None ..... Japanese Standard "JIS" and European Design Standard
90 ..... N. American Design Standard

Attachment

Mounting Bolts

Descriptions	Soc. Hd. Cap Screw	Qty.
Japanese Standard "JIS" European Design Standard	M5 × 45 Lg.	4
N. American Design Standard	No.10 - 24 UNC × 1-3/4 Lg.	4

Applicable Power Amplifier

For stable performance, it is recommended that Yuken's applicable power amplifiers be used (for details see page 782).

Model Numbers: AMN-G/W-10

Sub-plate

Piping Size	Japanese Standard "JIS"		European Design Standard		N. American Design Standard		Approx. Mass kg (lbs.)
	Sub-plate Model Numbers	Thread Size	Sub-plate Model Numbers	Thread Size	Sub-plate Model Numbers	Thread Size	
1/8	DSGM-01-31	Rc 1/8	DSGM-01-3180	1/8 BSP.F	DSGM-01-3190	1/8 NPT	0.8 (1.8)
1/4	DSGM-01X-31	Rc 1/4	DSGM-01X-3180	1/4 BSP.F	DSGM-01X-3190	1/4 NPT	0.8 (1.8)
3/8	DSGM-01Y-31	Rc 3/8	—	—	DSGM-01Y-3190	3/8 NPT	0.8 (1.8)

- Sub-plates are available. Specify the sub-plate model number from the table above. When sub-plates are not used, the mounting surface should have a good machined finish.
- Sub-plates are those for 1/8 solenoid operated directional valves. For dimensoins, see page 356.

EDFG-01-30-3C∗-XY-50/5090

Mounting Surface
ISO 4401-AB-03-4-A

DIMENSIONS IN MILLIMETRES (INCHES)

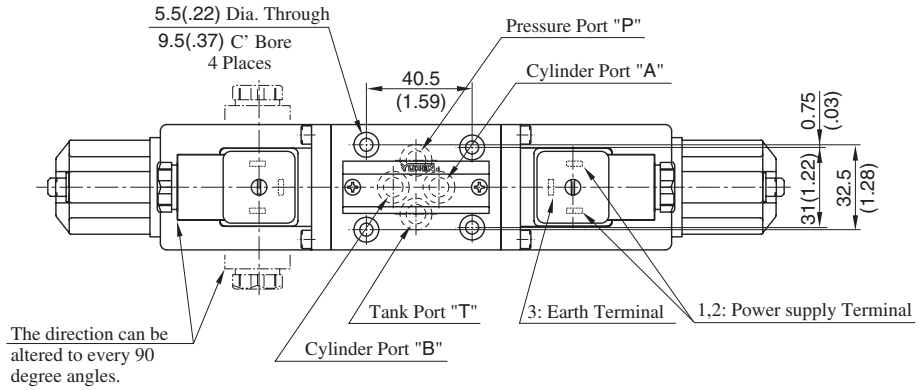

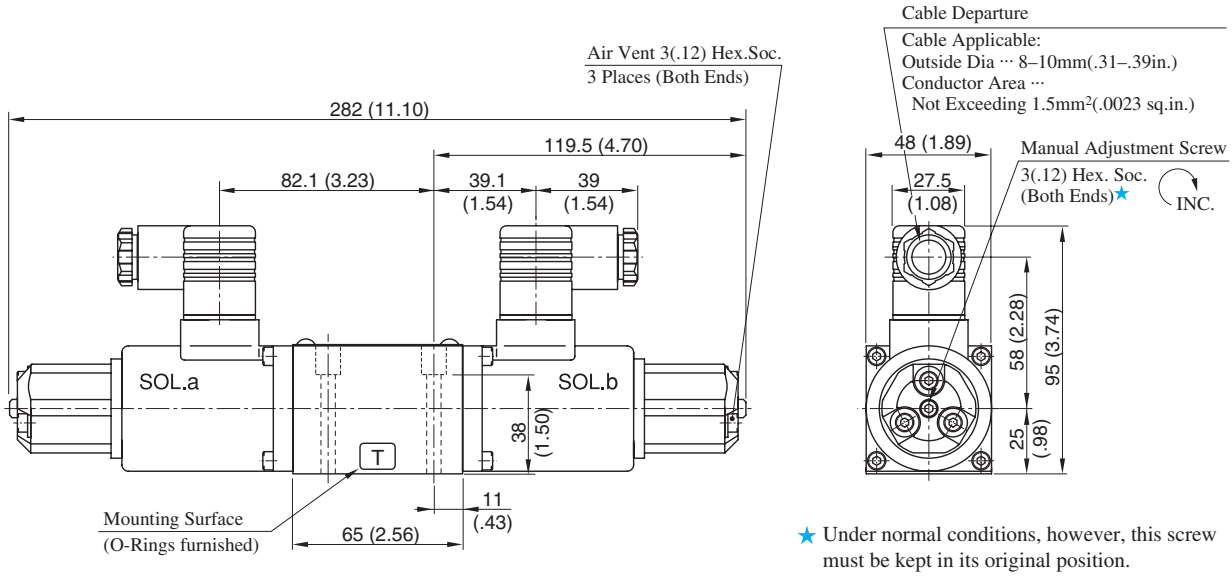

★ Under normal conditions, however, this screw must be kept in its original position.

Input Current vs. Flow

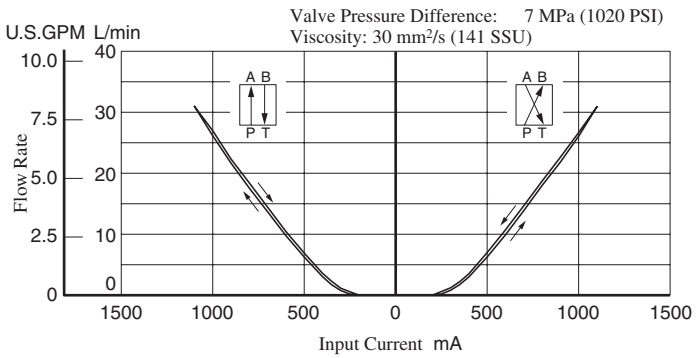

Valve pressure Difference vs. Flow

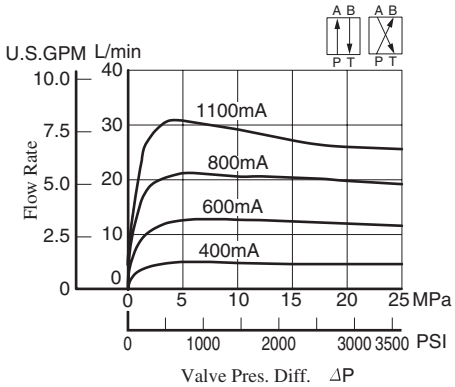

List of Seals and Solenoid Ass'y

EDFG-01-30-∗-XY-50/5090

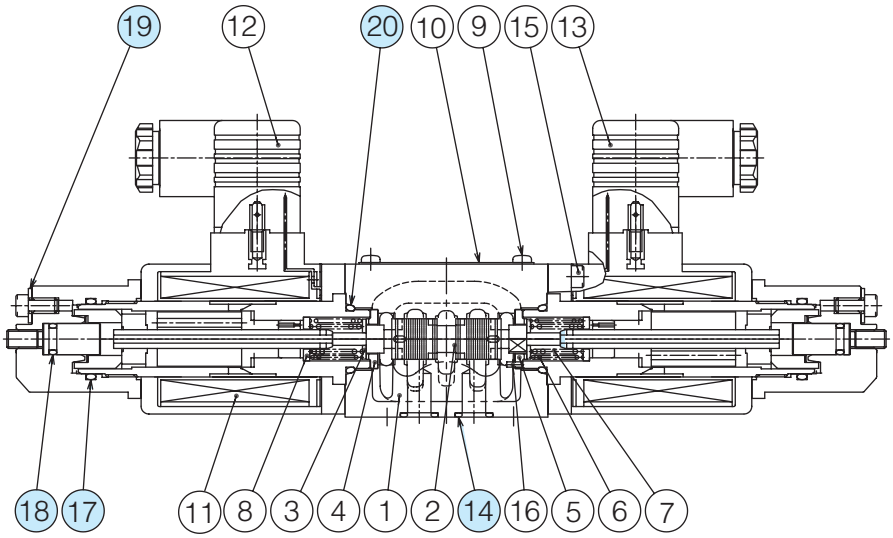

List of Seals

Item	Name of Parts	Part Numbers	Qty.	Remarks
14	O-Ring	SO-NB-P9	4	Included in Seal Kit
17	O-Ring	SO-NB-P22	2	
18	O-Ring	SO-NB-P7	2	
19	Fastner Seal	SG-FCF-4	6	Kit No.: KS-EDFG-01-50
20	O-Ring	SO-NB-P18	2	

Note) O-ring (Item 17, 18, 20) and the fastner sael (Item 19) are included in the solenoid assembly.

Solenoid Ass'y

Valve Model Numbers	⑪ Solenoid Ass'y	Qty.
EDFG-01-30-∗-XY-50/5090	E318-Y05M2-28-6103	2

Note) The connector assembley GDM-211-∗-11 (Item 12, 13) is not included in the solenoid assembly.

Proportional Electro-Hydraulic Directional and Flow Control Valves

These valves are double-deck directional and flow control valves employing as their pilot the electro-hydraulic proportional pressure reducing valves with two proportional solenoids. The flow rate can be controlled by changing an input current to the solenoids and the direction of the flow can be controlled by providing the current to either solenoid of the two.
By combining the valves with the power amplifiers specially designed for the valves, the speed control, acceleration, deceleration and directional control can be done with a single valve, which eventually makes the hydraulic circuits simple and contributes the cost of the hydraulic systems.

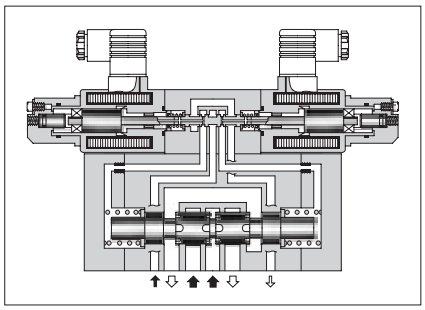

Specifications

Description \ Model No.		EDFHG-03	EDFHG-04	EDFHG-06
Max. Operating Pressure MPa (PSI)		25 (3630)		
Rated Flow L/min (U.S.GPM) at Valve Pressure Difference: 1.0 MPa (145 PSI)		100 (26.4)	140 (37.0)	280 (74.0)
Pilot Pressure ★1 MPa (PSI)		1.5 - 16 (220 - 2320) ★1		
Pilot Flow L/min (U.S.GPM)	at Normal	1 (.26)	1 (.26)	1 (.26)
	at Transition	3 (.79)	4 (1.06)	6 (1.59)
Max. Tank Line Back Pressure MPa (PSI)		16 (2320)	21 (3050)	21 (3050)
Max. Drain Line Back Pressure MPa (PSI)		3.0 (435) ★2		
Rated Current		800 mA	980 mA	900 mA
Coil Resistance		10 Ω		
Hysteresis		5% or less ★3		
Repeatability		1% or less ★3		
Approx. Mass kg (lbs.)		11 (24.3)	12 (26.5)	15 (33.1)

★1. Take care to keep the difference between the pilot pressure and drain port back pressure consistently greater than 1.5 MPa (220 PSI).
★2. To obtain stable performance, keep the drain port back pressure low and minimize its fluctuations.
★3. The hysteresis and repeatability values indicated in the specifications for each control valve are determined under the following conditions:
- Hysteresis Value: Obtained when Yuken's applicable power amplifier is used.
- Repeatability Value: Obtained when Yuken's applicable power amplifier is used under the same conditions.

Graphic Symbols

External Pilot Type

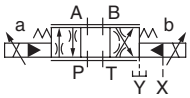

Internal Pilot Type

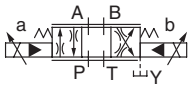

Model Number Designation

F-	EDFH	G	-03	-100	-3C2	-XY	-E	-31	*
Special Seals	Series Number	Type of Mounting	Valve Size	Rated Flow L/min (U.S.GPM)	Spool Type ★1	Direction of Flow	Pilot Connection	Design Number	Design Standards
F: Special Seals for Phosphate Ester Type Fluids (Omit if not required)	**EDFH**: Proportional Electro-Hydraulic Directional and Flow Control Valves	**G**: Sub-Plate Mounting	**03**	**100**: 100 (26.4)	**3C2** **3C40**	**XY**: Metre-in • Metre-out	**E**: External Pilot **None**: Internal Pilot	**31**	Refer to ★2
			04	**140**: 140 (37.0)				**31**	
			06	**280**: 280 (74.0)				**31**	

★1. Spool type shown in the column is for the centre position.
★2. Design Standards: None ..... Japanese Standard "JIS" and European Design Standard
90 ..... N. American Design Standard

Attachment

Mounting Bolts

Model Numbers	Socket Head Cap Screw			
	Japanese Standard "JIS" European Design Standard	N. American Design Standard	Qty.	Tightening Torque Nm (in. lbs.)
EDFHG-03	M6 × 35 Lg.	1/4-20 UNC × 1-1/2 Lg.	4	12 - 15 (106 - 133)
EDFHG-04	M6 × 45 Lg. M10 × 50 Lg.	1/4-20 UNC × 1-3/4 Lg. 3/8-16 UNC × 2 Lg.	2 4	12 - 15 (106 - 133) 58 - 72 (513 - 637)
EDFHG-06	M12 × 60 Lg.	1/2-13 UNC × 2-1/2 Lg.	6	100 - 123 (885 - 1089)

Sub-plates

Valve Model Numbers	Japanese Standard "JIS"			European Design Standard			N. American Design Standard		
	Sub-plate Model Numbers	Thread Size	Approx. Mass kg (lbs.)	Sub-plate Model Numbers	Thread Size	Approx. Mass kg (lbs.)	Sub-plate Model Numbers	Thread Size	Approx. Mass kg (lbs.)
EDFHG-03	DHGM-03Y-10	Rc 3/4	4.7 (10.4)	DHGM-03Y-1080	3/4 BSP.F	4.7 (10.4)	DHGM-03Y-1090	3/4 NPT	4.7 (10.4)
EDFHG-04	DHGM-04-20 DHGM-04X-20	Rc 1/2 Rc 3/4	4.4 (9.7) 4.1 (9.0)	DHGM-04-2080 DHGM-04X-2080	1/2 BSP.F 3/4 BSP.F	4.4 (9.7) 4.1 (9.0)	DHGM-04-2090 DHGM-04X-2090	1/2 NPT 3/4 NPT	4.4 (9.7) 4.1 (9.0)
EDFHG-06	DHGM-06-50 DHGM-06X-50	Rc 3/4 Rc 1	7.4 (16.3) 7.4 (16.3)	DHGM-06-5080 DHGM-06X-5080	3/4 BSP.F 1 BSP.F	8.5 (18.7) 8.5 (18.7)	DHGM-06-5090 DHGM-06X-5090	3/4 NPT 1 NPT	7.4 (16.3) 7.4 (16.3)

- Sub-plates are available. Specify the sub-plate model number from the table above. When sub-plates are not used, the mounting surface should have a good machined finish.
- Sub-plates are those for solenoid controlled pilot operated directional valves. For dimensions, see page 401 and 402.

Applicable Power Amplifiers

For stable performance, it is recommended that Yuken's applicable power amplifiers be used (for details see page 784).
Model Numbers: SK1091-D24-10

Instructions

Manual Adjustment

In the event of an electric fault or emergency, a manual shift can be made by screwing in the manual adjustment screw. Take care, however, that this manual shift has no flows adjusting function.
For this operation, set the pilot pressure (or P-port pressure on an internal-pilot model) below 7 MPa (1020 PSI).
After operation, be sure to return the manual adjustment screw completely to the original position.

EDFHG-03-100-3C∗-XY-∗-31/3190

Mounting Surface: Main port ... Conform to ISO 4401-AC-05-4-A.
Pilot/drain ports ... Conform to ISO.

★Of the two tank ports "T", the tank port in the left side is normally used in our standard sub-plate, though, either side of the tank port "T" can be used without problem.

Note: For valve mounting surface dimensions, see the dimensional drawings of sub-plates (p.401) in common use.

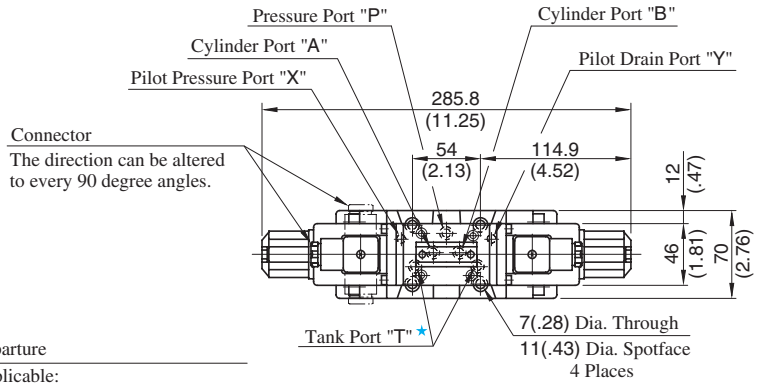

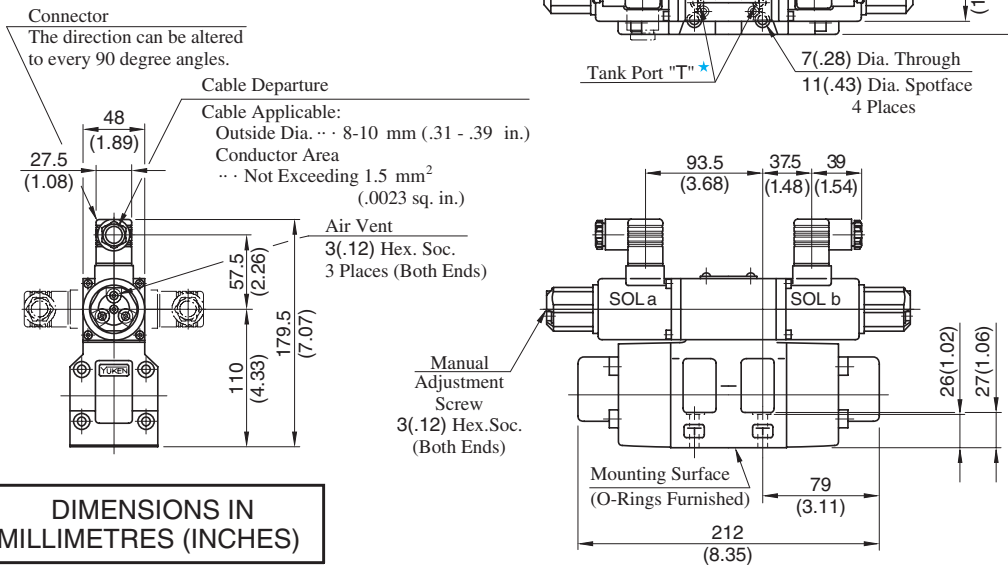

DIMENSIONS IN MILLIMETRES (INCHES)

EDFHG-04-140-3C∗-XY-∗-31/3190

Mounting surface: Conform to ISO4401-AD-07-4-A.

★ Position of cable departure can be changed. For details, refer to above EDFHG-03.

Note: For valve mounting surface dimensions, see the dimensional drawings of sub-plates (p.401) in common use.

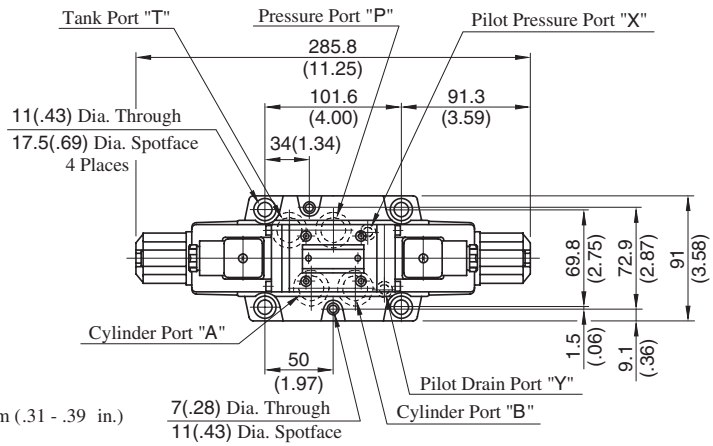

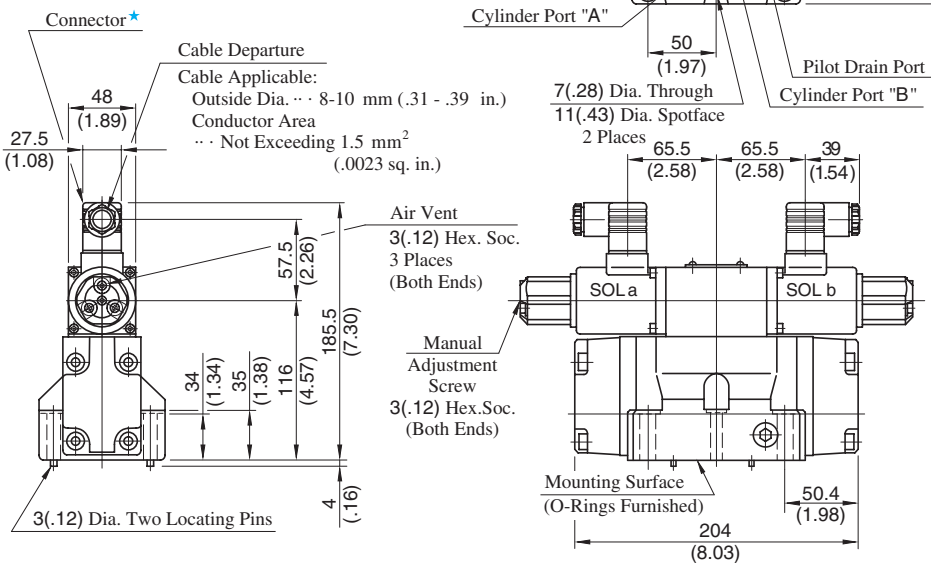

EDFHG-06-280-3C∗-XY-∗-31/3190

Mounting surface: Conform to ISO4401-AE-08-4-A.

★Position of cable departure can be changed. For details, refer to EDFHG-03 valve on page 748.

Note: For valve mounting surface dimensions, see the dimensional drawings of sub-plates (p.402) in common use.

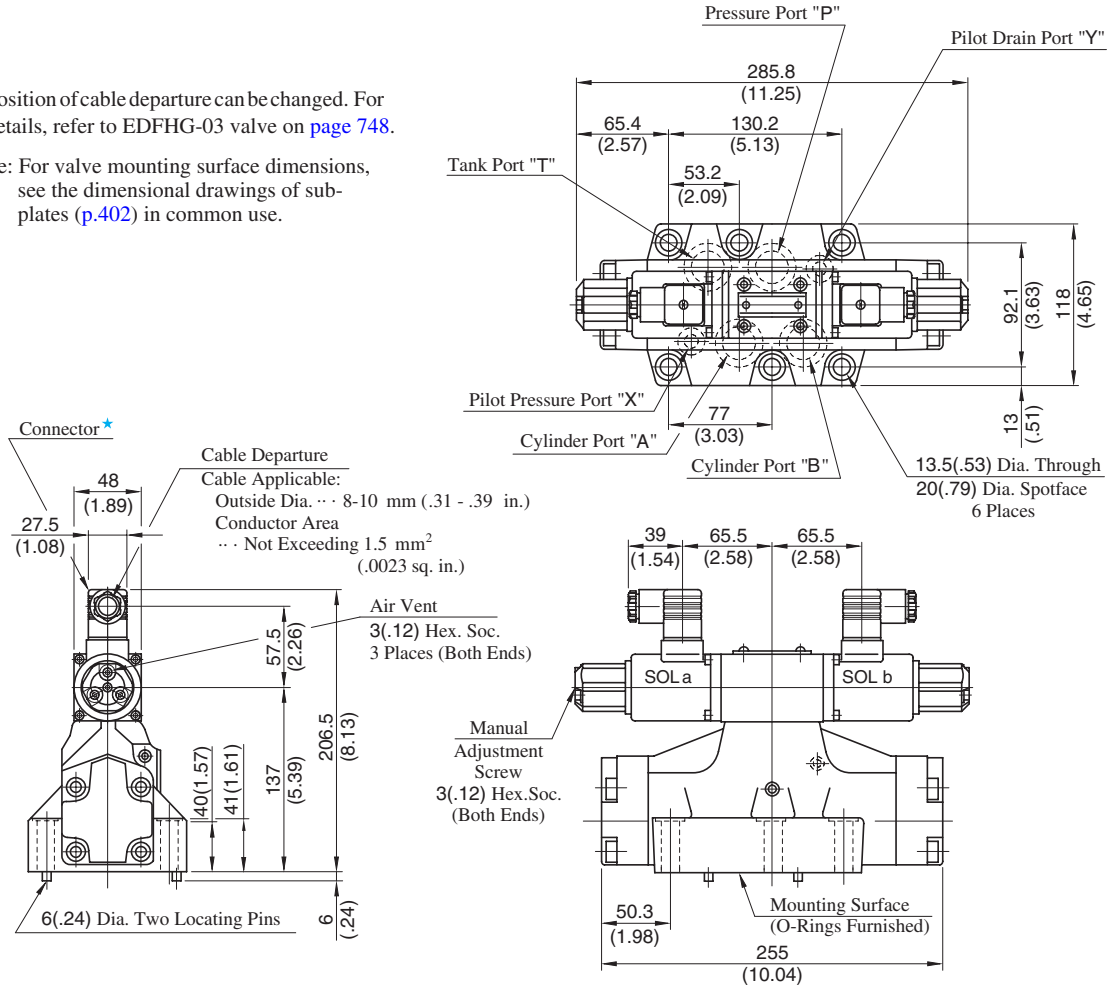

DIMENSIONS IN MILLIMETRES (INCHES)

Interchangeability between Current and New Design

- **Specifications and Characteristics**

  No changes in specifications and characteristics between current and new design.

- **Mounting Interchangeability**

  The mounting surface are interchangeable.

  Note that because of improvements made on the solenoids, the overall shapes have been changed as shown below.

Current: Design 30

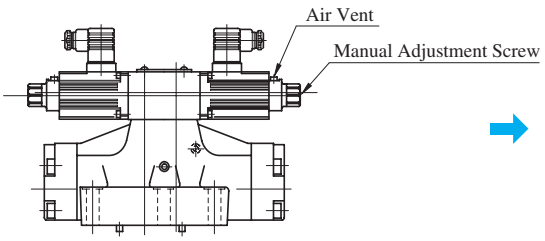

New: Design 31

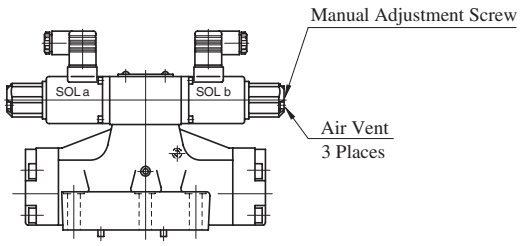

Input Current vs. Flow

Viscosity : 30 mm²/s (141 SSU)
Valve Pres. Difference : P→A (B), B (A) →T 1 MPa (145 PSI)

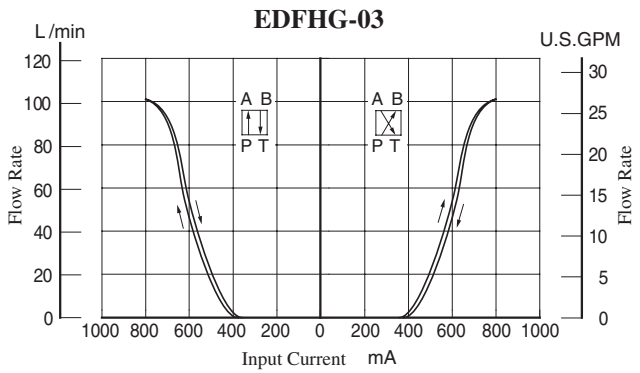

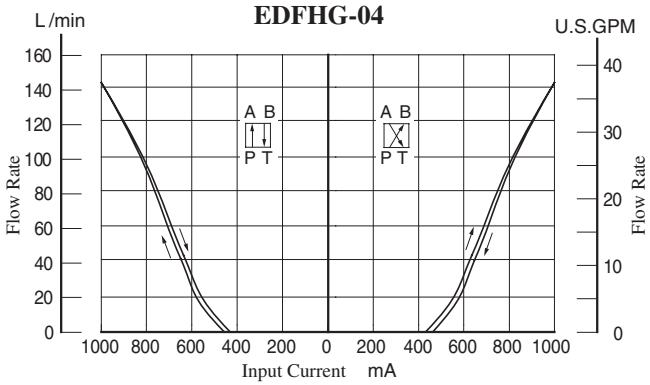

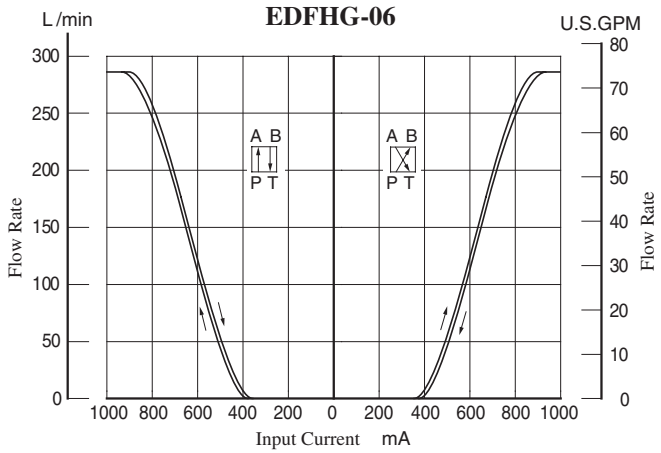

Valve Pressure Difference vs. Flow

Viscosity : 30 mm²/s (141 SSU)

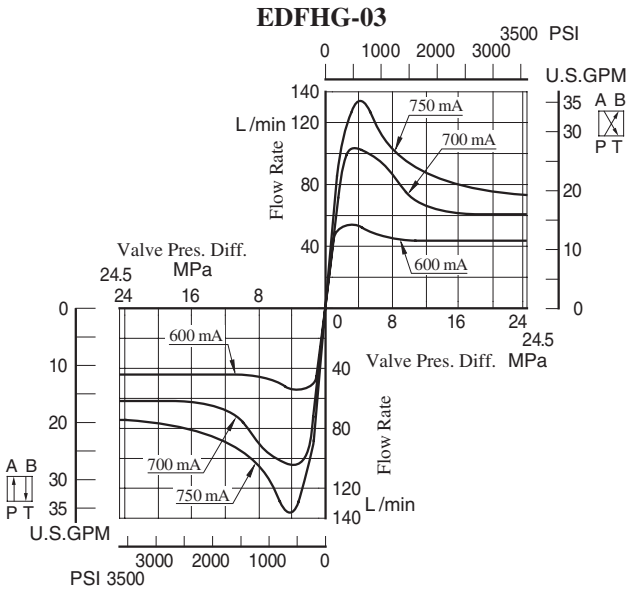

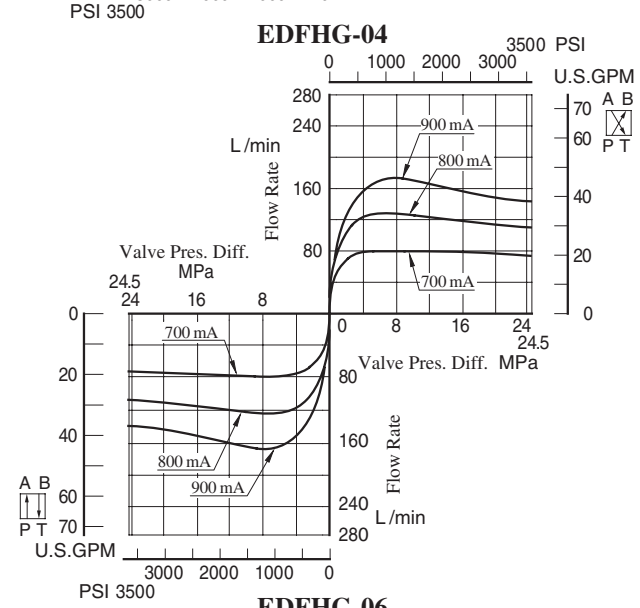

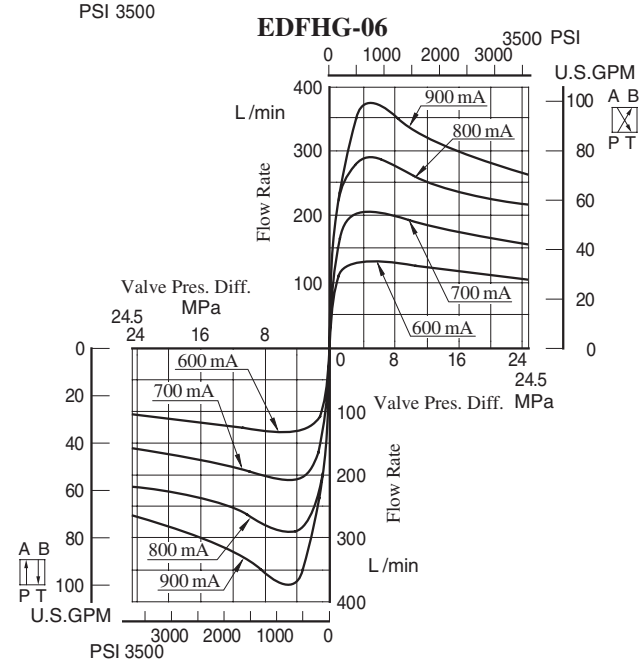

Frequency Response

EDFHG-03

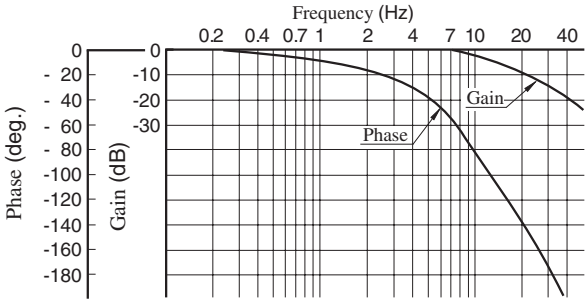

Model Number : EDFHG-03-100-3C2-E-31
Viscosity : 30 mm²/s(141 SSU)
Pilot Pressure : 15.7 MPa(2280 PSI)
Travel of Spool : ±10% of Maximum Stroke

EDFHG-04

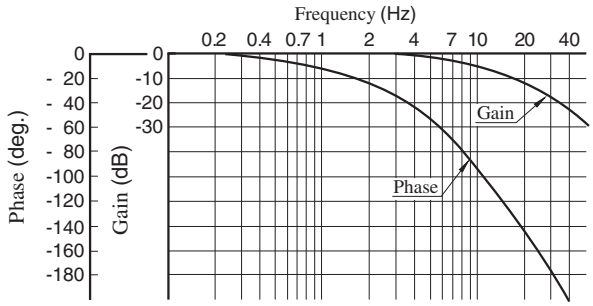

Model Number : EDFHG-04-140-3C2-E-31
Viscosity : 30 mm²/s(141 SSU)
Pilot Pressure : 15.7 MPa(2280 PSI)
Travel of Spool : ±10% of Maximum Stroke

EDFHG-06

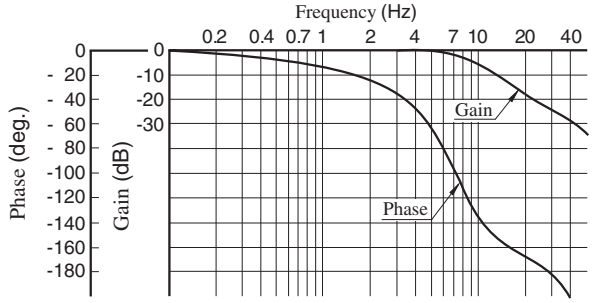

Model Number : EDFHG-06-280-3C2-E-31
Viscosity : 30 mm²/s(141 SSU)
Pilot Pressure : 15.7 MPa(2280 PSI)
Travel of Spool : ±10% of Maximum Stroke

Step Response

These characteristics have been obtained by measuring on each valve. Therefore, they may vary according to a hydraulic circuit to be used.

Viscosity : 30 mm²/s(141 SSU)
Supply Pressure : 15.7 MPa(2280 PSI)

EDFHG-03

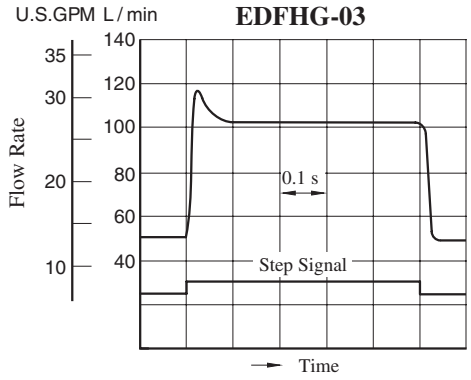

EDFHG-04

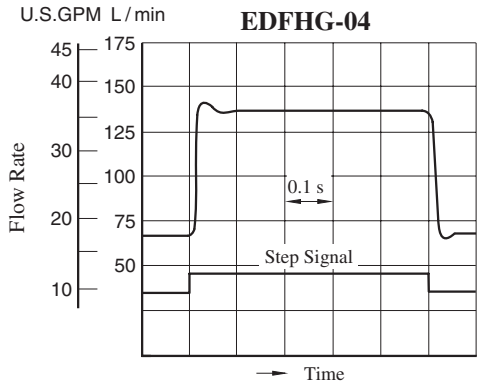

EDFHG-06

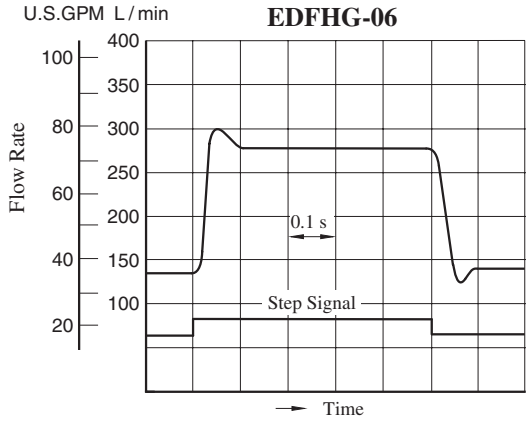

List of Seals and Solenoid Ass'y

EDFHG-03-100-3C∗-XY-∗-31/3190
EDFHG-04-140-3C∗-XY-∗-31/3190
EDFHG-06-280-3C∗-XY-∗-31/3190

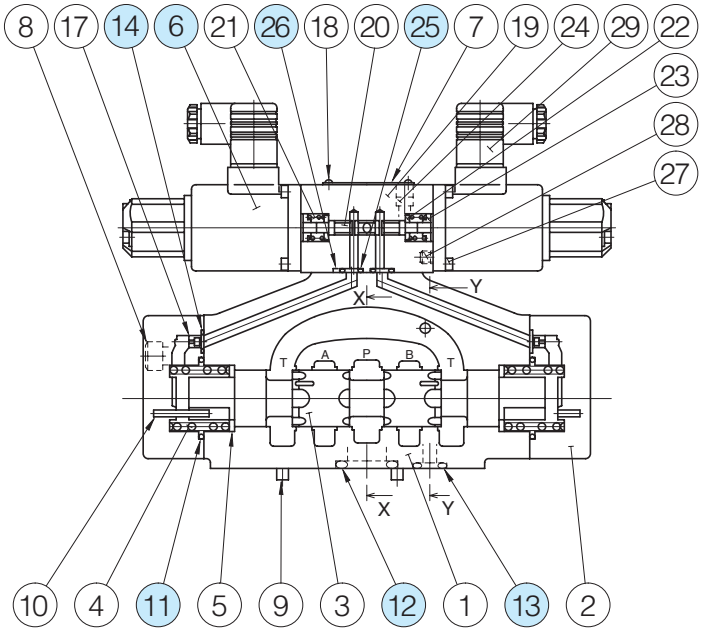

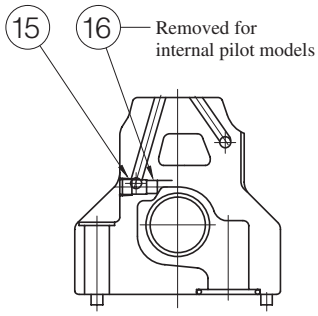

Section X-X

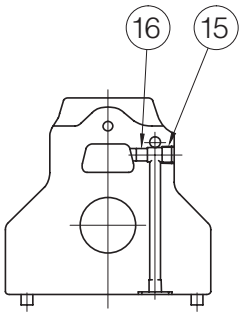

Section Y-Y

List of Seals and Solenoid Ass'y

Item	Name of Parts	EDFHG-03		EDFHG-04		EDFHG-06	
		Part Numbers	Qty.	Part Numbers	Qty.	Part Numbers	Qty.
6	Solenoid Ass'y	E318-Y06M1-28-61	2	E318-Y06M1-28-61	2	E318-Y06M1-28-61	2
11	O-Ring	SO-NB-P28	2	SO-NB-P34	2	SO-NB-P40	2
12	O-Ring	SO-NB-A014	5	SO-NB-P22	4	SO-NB-P30	4
13	O-Ring	SO-NB-P9	2	SO-NB-P9	2	SO-NB-P14	2
14	O-Ring	SO-NB-P9	6	SO-NB-P9	2	SO-NB-P10	2
25	O-Ring	SO-NB-P9	4	SO-NB-P9	4	SO-NB-P9	4
26	O-Ring	SO-NB-P4	2	SO-NB-P4	2	SO-NB-P4	2

Note: The GDM-211-B-11 connector assembly (Item 29) is not included in the solenoid assembly.
When ordering seals, please specify the seal kit number from the table below. In addition to the above o-rings, seals for solenoid ass'y are included in the seal kit.
For the detail of the solenoid ass'y o-rings, see page 674.

List of Seal Kits

Valve Model Numbers	Seal Kit Numbers
EDFHG-03	KS-EDFHG-03-31
EDFHG-04	KS-EDFHG-04-31
EDFHG-06	KS-EDFHG-06-31

High Response Type Proportional Electro-Hydraulic Directional and Flow Control Valves

High response, high precision and high reliability are achieved be a combination of a compact and powerful solenoid and a spool-position-detection LVDT.
Direct type ELDFG-01/03 and two stage type ELDFG-04/06 (which use the ELDFG-01 as a pilot) are available.

Direct Operated Type Directional and Flow Control Valves

This product can be interchanged with the simpliffied servo valve to perform position control and pressure control.
Compared to nozzle flapper type servo valve, this product has excellent contamination-related problems.

Specifications

Description \ Model No.		ELDFG-01	ELDFG-03
Max. Operating Pressure MPa (PSI)		31.5 (4570)	
Max. Tank Line Back Pressure MPa (PSI)		21 (3050)	
Rated Flow L/min (U.S.GPM) Valve Pres. Diff. : 1.5 MPa (220 PSI)		10: 10 (2.6) 20: 20 (5.3) 35: 35 (9.2)	40: 40 (10.6) 80: 80 (21.1)
Hysteresis		0.5% or less	
Repeatability		0.5% or less	
Step Response (Typical Rating)	0 → 100%	30 ms	3C2, 3C40: 29 ms 3C2P: 25 ms
	100 → 0%	38 ms	3C2, 3C40: 26 ms 3C2P: 23 ms
Frequency Response (0 ±25 %V)	Phase -90 degree	48 Hz	3C2, 3C40: 36 Hz 3C2P: 41 Hz
	Gain -3 dB	52 Hz	3C2, 3C40: 35 Hz 3C2P: 38 Hz
Rated Current		Max. 2.5 A	Max. 3 A
Coil Resistance [20°C (68°F)]		3.9 Ω	3 Ω
Power Input		Max. 25 W	Max. 27 W
Approx. Mass kg (lbs.)		3.2 (7.1)	7.5 (16.5)

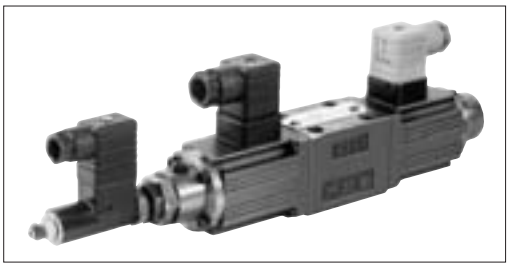

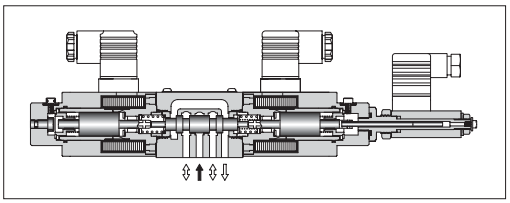

Graphic Symbols

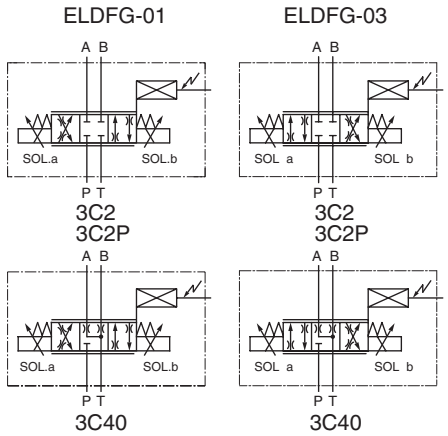

Range of Flow Control

See "Valve Pres. Difference vs. Flow Rate" below charactristics for the appropriate range.

ELDFG-01

Control Type 4 Port Valve | Control Type 3 Port Valve

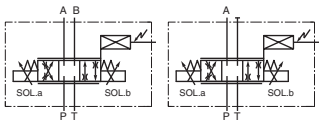

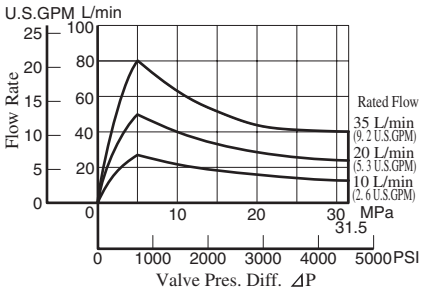

ELDFG-03

Control Type 4 Port Valve | Control Type 3 Port Valve

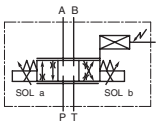

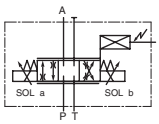

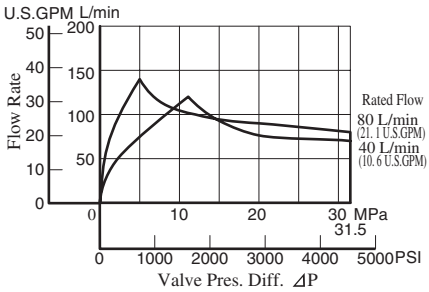

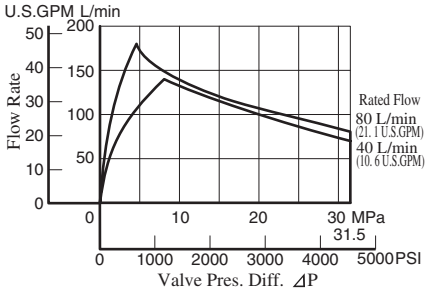

★ Valve pressure difference "⊿P" is reference by follows. In addition, "P", "A", "B", "T", are pressure of each port.
4 Port Valve: ⊿P = [(P–A) + (B–T)] or [(P–B) + (A–T)]
3 Port Valve: ⊿P = (P–A) or (A–T)

Model Number Designation

F-	ELDF	G	-01	-35	-3C2	-XY	-10	∗
Special Seals	Series Number	Type of Mounting	Valve Size	Rated Flow L/min (U.S.GPM)	Spool Type	Direction of Flow	Design Number	Design Standards
F: Special Seals for Phosphate Ester Type Fluid (Omit if not required)	**ELDF**: High Response (Direct) Type Proportional Electro -Hydraulic Directional and Flow Control Valves	**G**: Sub-plate Mounting	**01**	**10**: 10 (2.6) **20**: 20 (5.3) **35**: 35 (9.2)	**3C2** **3C40** **3C2P** 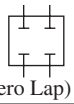 (Zero Lap)	**XY**: Metre-In · Metre-Out	**10**	Refer to ★
			03	**40**: 40 (10.6) **80**: 80 (21.1)			**10**	

★ Design Standards: None ..... Japanese Standard "JIS" and European Design Standard
90 ..... N. American Design Standard

Attachment

Mounting Bolts

Four socket head cap screws in the table below are included.

Model No.	Descriptions	Soc. Hd. Cap Screw (4 pcs.)	Tightening Torque
ELDFG-01	Japanese Standard "JIS" European Design Standard	M5 × 45 Lg.	5 - 7 Nm (43 - 60 in. lbs.) [Applicable to working pressure more than 25 MPa (3630 PSI): 6 - 7 Nm (52 - 60 in. lbs.)]
	N. American Design Standard	No. 10-24 UNC × 1-3/4 Lg.	
ELDFG-03	Japanese Standard "JIS" European Design Standard	M6 × 35 Lg.	12 - 15 Nm (106 - 133 in. lbs.)
	N. American Design Standard	1/4-20 UNC × 1-1/2 Lg.	

Sub-plate

Valve Model Numbers	Piping Size	Japanese Standard "JIS"		European Design Standard		N. American Design Standard		Approx. Mass kg (lbs.)
		Sub-plate Model Numbers	Thread Size	Sub-plate Model Numbers	Thread Size	Sub-plate Model Numbers	Thread Size	
ELDFG-01	1/8	DSGM-01-31	Rc 1/8	DSGM-01-3180	1/8 BSP.F	DSGM-01-3190	1/8 NPT	0.8 (1.8)
	1/4	DSGM-01X-31	Rc 1/4	DSGM-01X-3180	1/4 BSP.F	DSGM-01X-3190	1/4 NPT	0.8 (1.8)
	3/8	DSGM-01Y-31	Rc 3/8	—	—	DSGM-01Y-3190	3/8 NPT	0.8 (1.8)
ELDFG-03	3/8	DSGM-03-40	Rc 3/8	DSGM-03-2180	3/8 BSP.F	DSGM-03-2190	3/8 NPT	3.0 (6.6)
	1/2	DSGM-03X-40	Rc 1/2	DSGM-03X-2180	1/2 BSP.F	DSGM-03X-2190	1/2 NPT	3.0 (6.6)
	3/4	DSGM-03Y-40	Rc 3/4	DSGM-03Y-2180	3/4 BSP.F	DSGM-03Y-2190	3/4 NPT	4.7 (10.4)

- Sub-plates are available. Specify the sub-plate model number from the table above.
  When sub-plates are not used, the mounting surface should have a good machined finish.
- The Sub-plates are those for 1/8 and 3/8 solenoid operated directional valves. For dimensions, see page 356 and 373.

Applicable Power Amplifiers

For stable performance, it is recommended that Yuken's applicable power amplifiers be used (for details see page 786).

Valve Model Numbers	Power Amplifier Model Numbers
ELDFG-01-∗-3C2 / 3C40	AMN-L-01-1-10
ELDFG-01-∗-3C2P	AMN-L-01-3-2P-10
ELDFG-03-∗-3C2 / 3C40	AMB-EL-03-1-10
ELDFG-03-∗-3C2P	AMB-EL-03-2P-1-10

ELDFG-01-∗-∗-XY-10/1090

Mounting surface: Conform to ISO4401-AB-03-4-A.

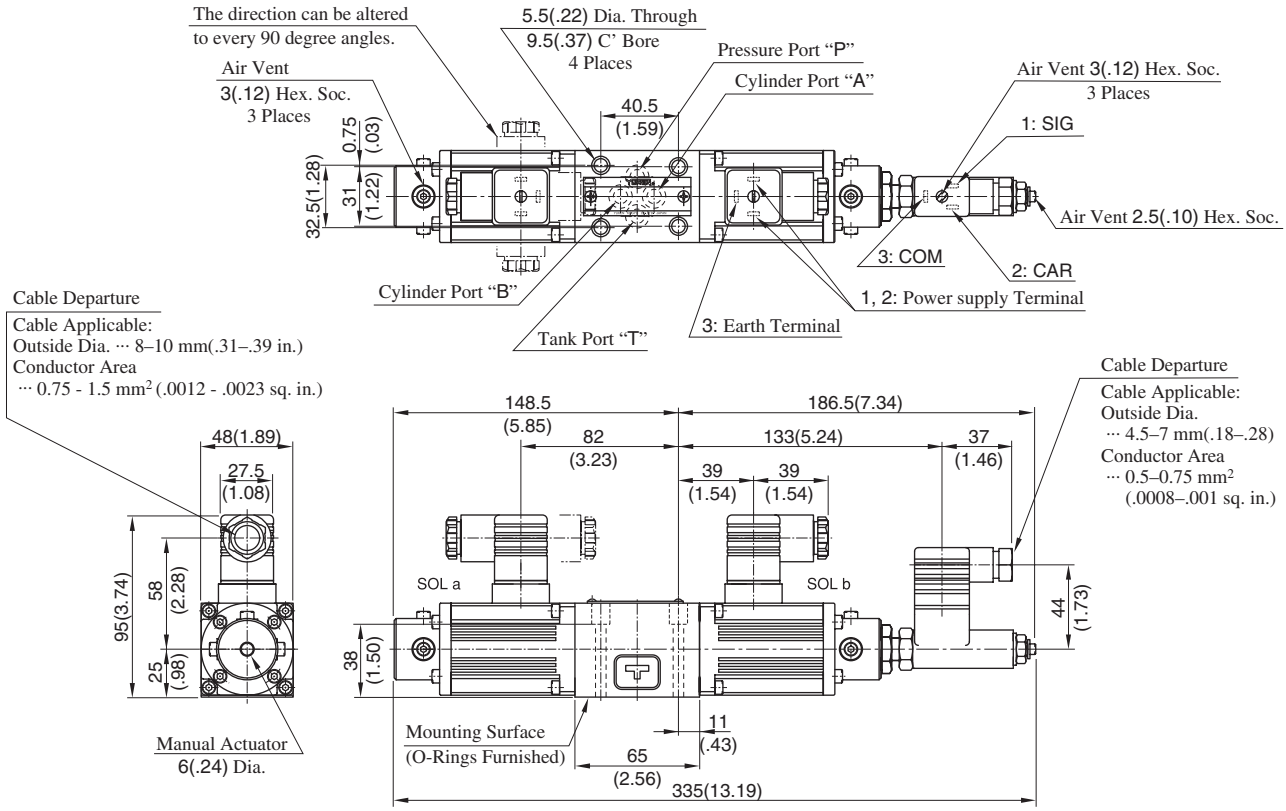

Note: For valve mounting surface dimensions, see the dimensional drawings of sub-plates (p.356) in common use.

ELDFG-03-∗-∗-XY-10/1090

Mounting surface: Conform to ISO4401-AC-05-4-A.

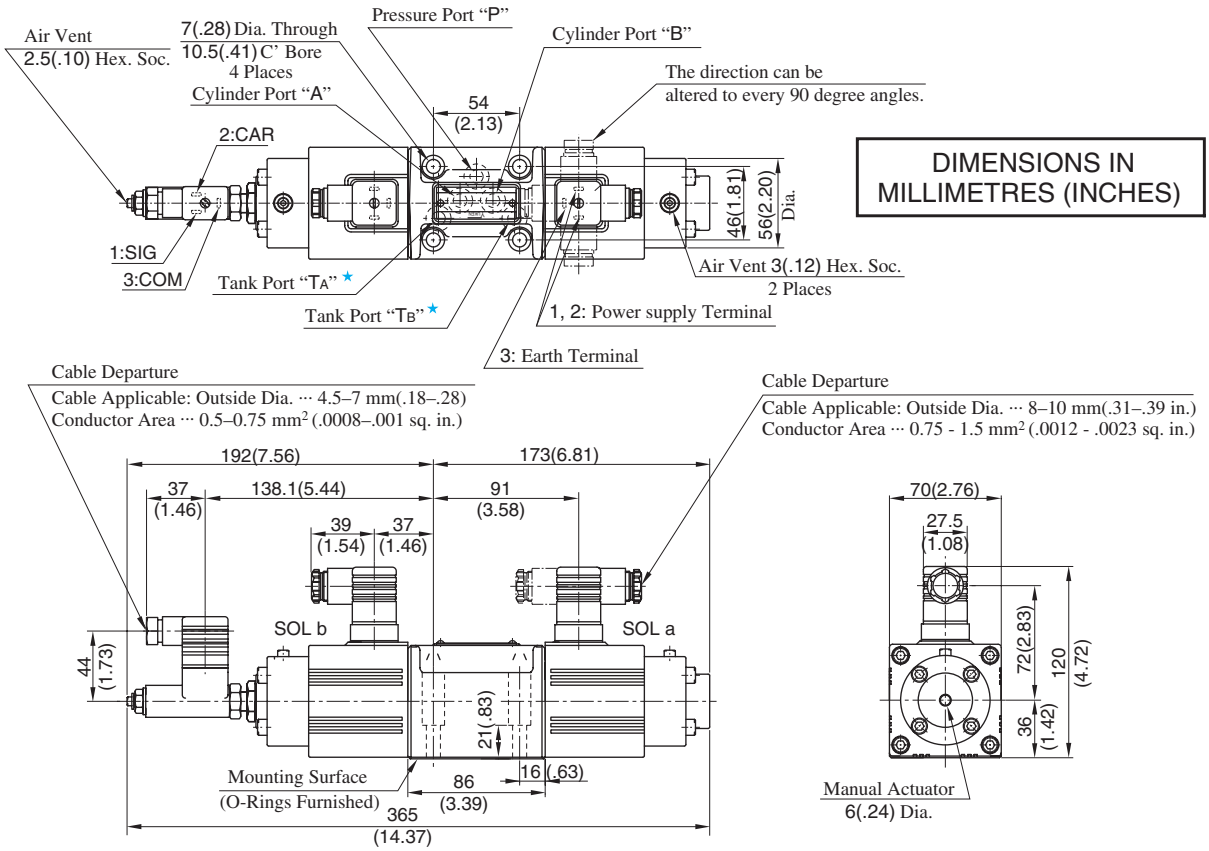

DIMENSIONS IN MILLIMETRES (INCHES)

Note: For valve mounting surface dimensions, see the dimensional drawings of sub-plates (p.373) in common use.

Input Voltage vs. Flow Rate

ELDFG–01–∗–3C2/3C40

Valve Pres. Diff. : 1.2 MPa (174 PSI)
Viscosity : 30 mm²/s (141 SSU)

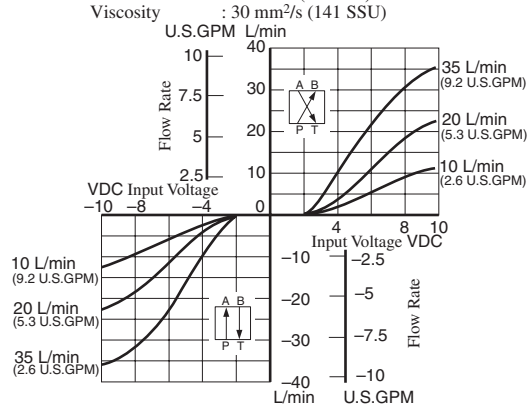

ELDFG–01–∗ –3C2P

Valve Pres. Diff. : 1.2 MPa (174 PSI)
Viscosity : 30 mm²/s (141 SSU)

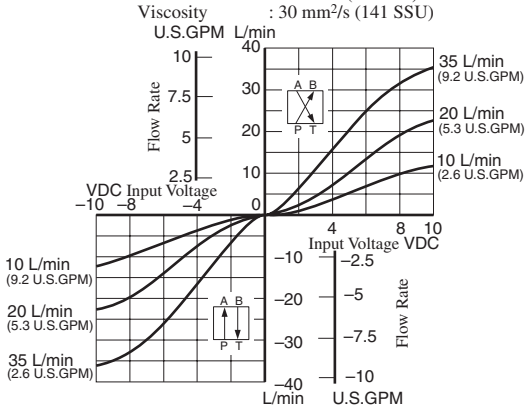

ELDFG–03–∗–3C2/3C40

Valve Pres. Diff. : 1.5 MPa (218 PSI)
Viscosity : 30 mm²/s (141 SSU)

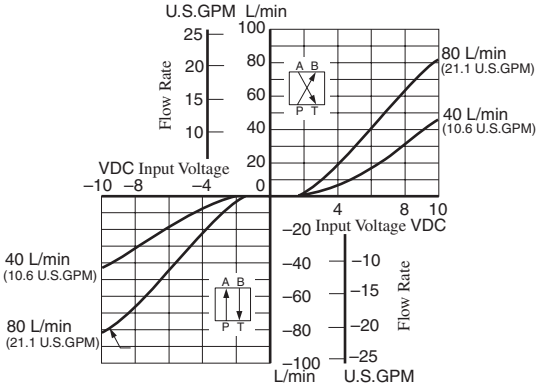

ELDFG–03–∗–3C2P

Valve Pres. Diff. : 1.5 MPa (218 PSI)
Viscosity : 30 mm²/s (141 SSU)

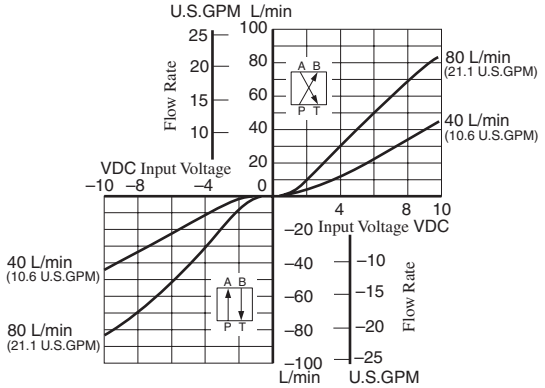

Input Voltage vs. Spool St.

ELDFG–01–∗–3C2/3C40

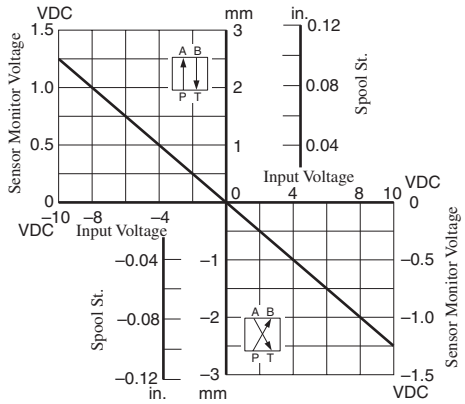

ELDFG–01–∗–3C2P

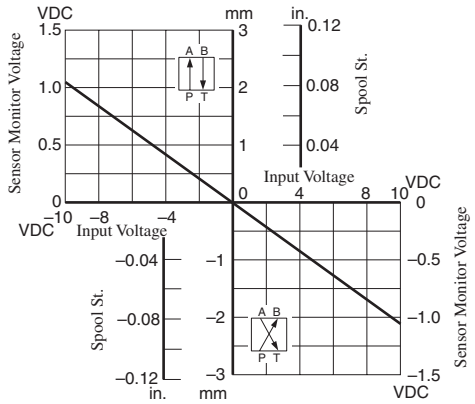

ELDFG–03–∗–3C2/3C40

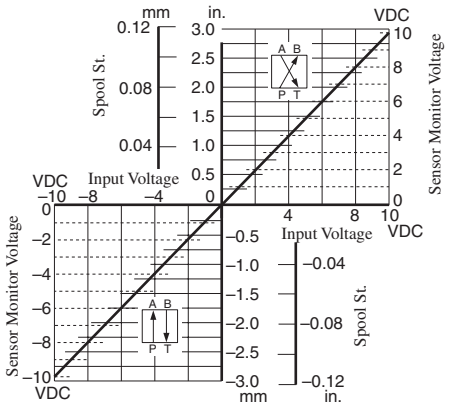

ELDFG–03–∗–3C2P

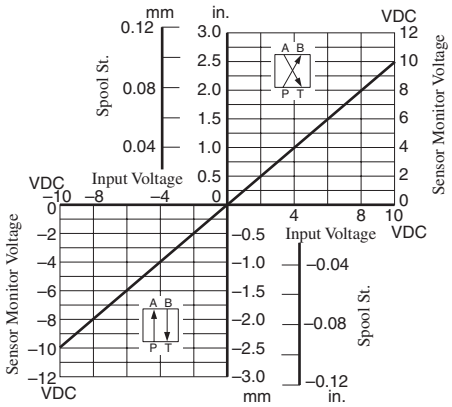

Step Response (Example)

Viscosity : 30 mm²/s (140 SSU)

The values were measured on independent valves. They vary by circuit.

ELDFG-01-35-3C2/3C40

Supply Pressure : 2 MPa (290 PSI)
Flow Rate : 35 L/min (9.2 U.S.GPM)

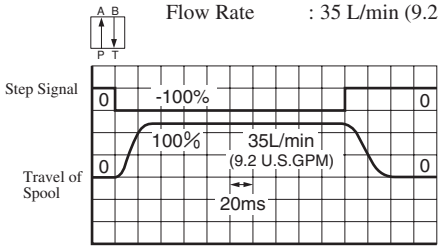

ELDFG-01-35-3C2P

Supply Pressure : 2 MPa (290 PSI)
Flow Rate : 35 L/min (9.2 U.S.GPM)

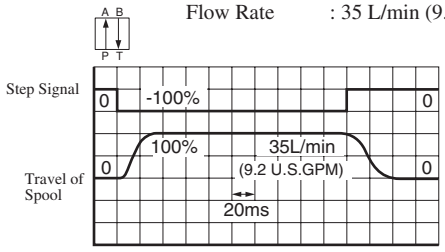

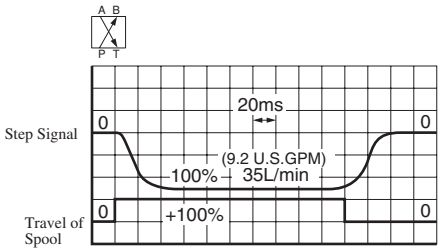

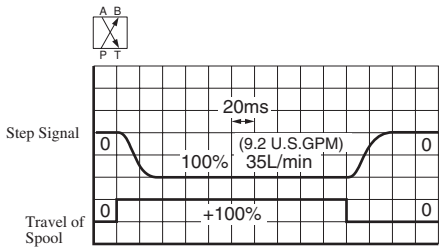

ELDFG-03-80-3C2/3C40

Supply Pressure : 4 MPa (580 PSI)
Flow Rate : 80 L/min (21.1 U.S.GPM)

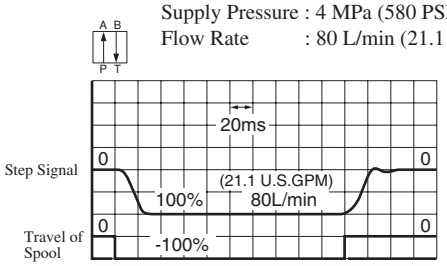

ELDFG-03-80-3C2P

Supply Pressure : 4 MPa (580 PSI)
Flow Rate : 80 L/min (21.1 U.S.GPM)

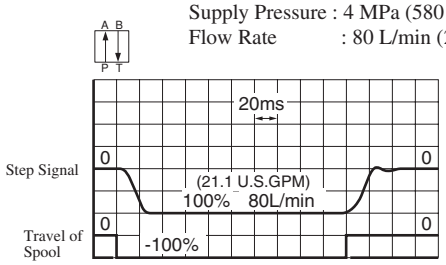

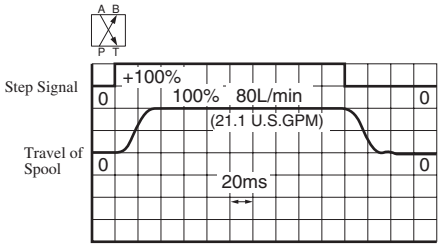

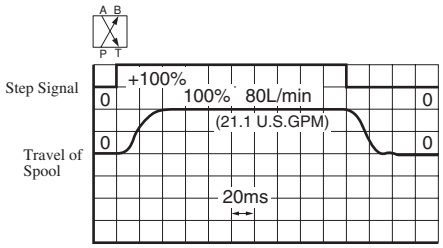

Frequency Response

Input Signal : 0 ±25 %V
Primary Pressure : 14 PMa (2030 PSI)
Viscosity : 30 mm²/s (140 SSU)

ELDFG-01-35-3C2/3C40/3C2P

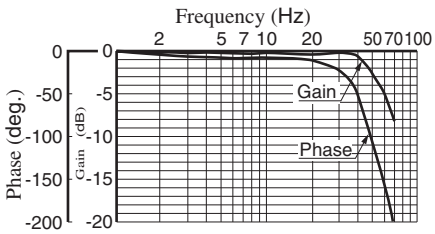

ELDFG-03-80-3C2/3C40

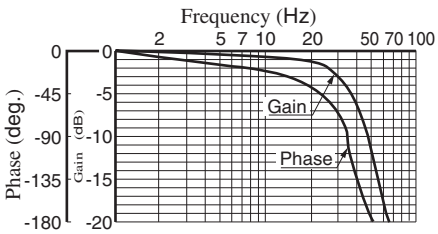

ELDFG-03-80-3C2P

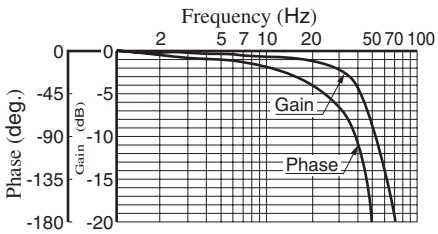

List of Seals and Solenoid Ass'y

ELDFG-01-∗-∗-XY-10/1090

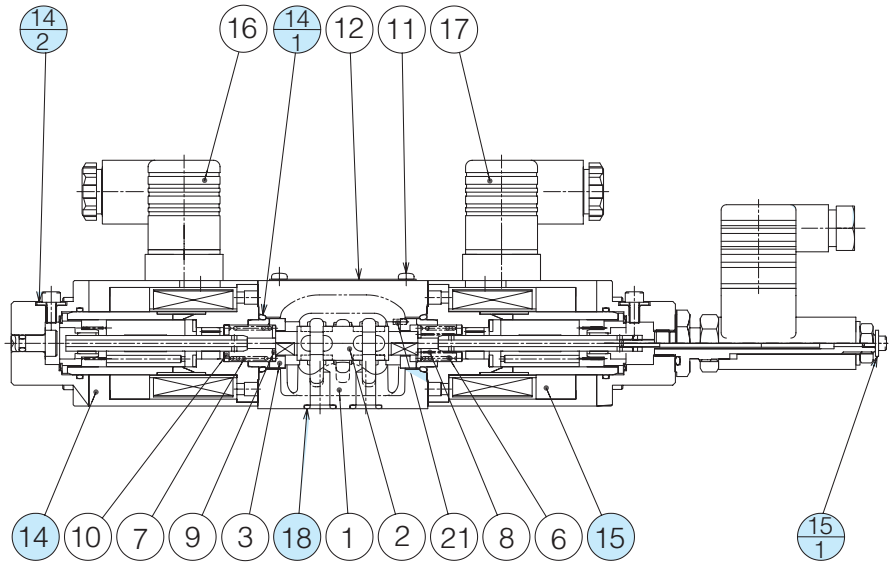

List of Seals

Item	Name of Parts	Part Numbers	Qty.	Remarks
14-1	O-Ring	SO-NB-P18	2	Included in Seal Kit Kit No.: KS-ELDFG-01-10
14-2	Fastner Seal	SG-FCF-4	2	
15-1	Fastner Seal	TK280152-0	1	
18	O-Ring	SO-NB-P9	4	

Note) O-ring (Item 14-1) and the fastner sael (Item 14-2, 15-1) are included in the solenoid assembly.

Solenoid Ass'y

Valve Model Numbers	Item	Solenoid Ass'y	Qty.
ELDFG-01-∗-∗-XY-10/1090	14	E318-Y06M2-14-5007	1
	15	E318-Y06M2-14-L-5007	1

Note) The connector assembley GDM-211-∗-11 (Item 16, 17) is not included in the solenoid assembly.

List of Seals and Solenoid Ass'y

ELDFG-03-∗-∗-XY-10/1090

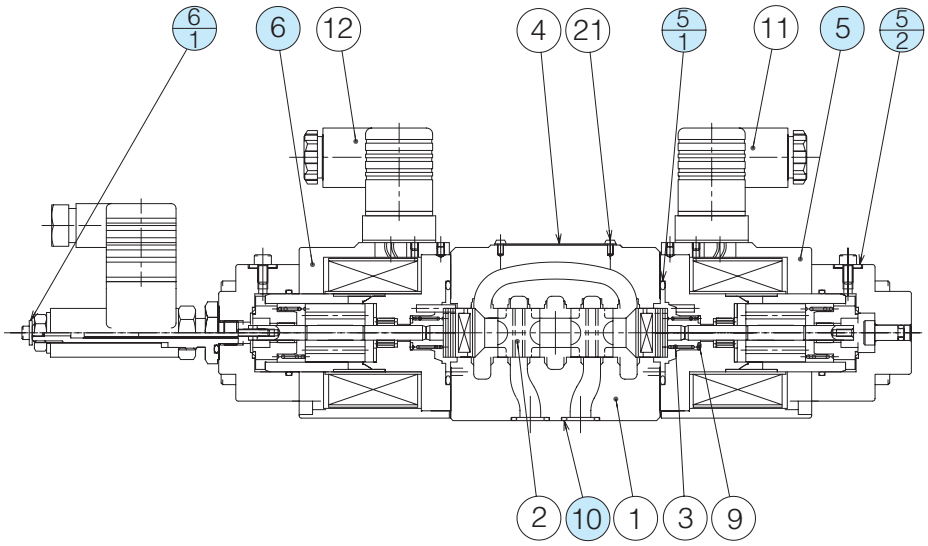

List of Seals

Item	Name of Parts	Part Numbers	Qty.	Remarks
5-1	O-Ring	SO-NB-A128	2	Included in Seal Kit Kit No.: KS-ELDFG-03-10
5-2	Fastner Seal	SG-FCF-4	2	
6-1	Fastner Seal	TK280152-0	1	
10	O-Ring	SO-NB-A014	4	

Note) O-ring (Item 5-1) and the fastener sael (Item 5-2, 6-1) are included in the solenoid assembly.

Solenoid Ass'y

Valve Model Numbers	Item	Solenoid Ass'y	Qty.
ELDFG-03-∗-∗-XY-10/1090	5	E324-Y12M2-28-10	1
	6	E324-Y12M2-28-L-10	1

Note) The connector assembley GDM-211-∗-11 (Item 11, 12) is not included in the solenoid assembly.

Two Stage Type Directional and Flow Control Valves

Specifications

Description \ Model No.	ELDFHG-04	ELDFHG-06
Rated Flow L/min (U.S.GPM) Valve Pres. Diff. : 1 MPa (145 PSI)	280 (74.0)	350: 350 (92.5) 500: 500 (132.1)
Max. Operating Pressure MPa (PSI)	35 (5080)	350: 35 (5080) 500: 31.5 (4570)
Proof Pressure at Return Port ★1 (External Drain) MPa (PSI)	"T" Port : 31.5 (4570) "Y" Port : 21 (3050)	350 "T" Port : 35 (5080) "Y" Port : 21 (3050) 500 "T" Port : 25 (3630) "Y" Port : 21 (3050)
Proof Pressure at Return Port (Internal Drain) MPa (PSI)	21 (3050)	
Pilot Pressure ★2 MPa (PSI)	1.5–31.5 (218 – 4570)	
Pilot Flow ★3	16 L/min or more	350: 16 L/min or more 500: 19 L/min or more
Null Leakge★4 Ps=14 MPa (2030 PSI), Pp=14 MPa (2030 PSI)	3C2: 3 L/min or less 3C2P: 10 L/min or less	3C40: 4 L/min or less
Step Response (Typical Rating) (0↔100%) Pp=14 MPa (2030 PSI)	13 ms	350: 15 ms 500: 18 ms
Frequency Response (0±25%V, Phase) Pp=14 MPa (2030 PSI)	46 Hz (–90 degree)	350: 66 Hz 500: 39 Hz (–90 degree)
Water - Proofness	IP64	
Operating Temperature Range	–15 – +60 °C (5–140°F)	
Spool Type	3C2: 3C2P: (Zero Rap) 3C40:	
Approxmate Spool Stroke to Stops	±5 mm (± .20 in.)	350: ±5 mm (± .20 in.) 500: ±7 mm (± .28 in.)
Main Spool End Area cm² (sq. in.)	7.1 (1.10)	8 (1.24)
Rated Current	Max. 2.5 A	
Coil Resistance [20 °C (68 °F)]	3.9 Ω	
Approx. Mass kg (lbs.)	10 (22.0)	350: 18 (39.7) 500: 19 (41.9)

★1. Return pressure should be less than the actual supply pressure.
★2. Pilot pressure should be between 1.5 MPa (218 PSI) and 3.5 MPa (508 PSI), and should exceed 60% of the actual supply pressure to main valve.
★3. Pilot flow is calculated with the above step response time at pilot pressure 14 MPa (2030 PSI).
★4. Added up leakage of main and pilot spools are stated.

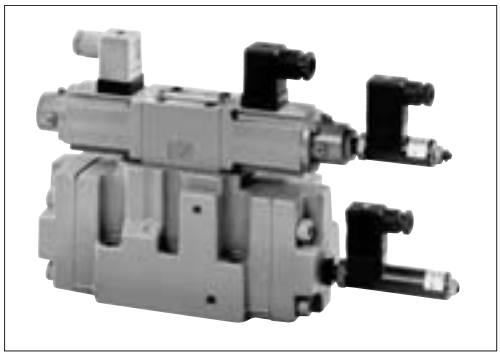

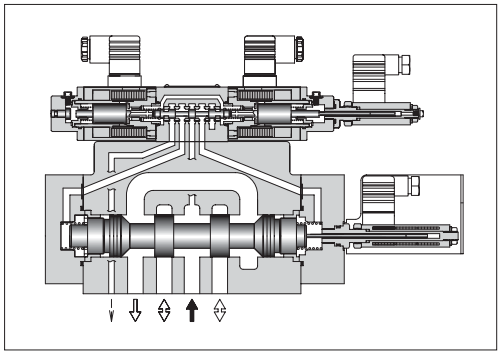

Graphic Symbols

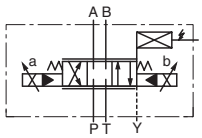

Internal Pilot / External Drain Type

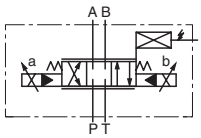

Internal Pilot / Internal Drain Type

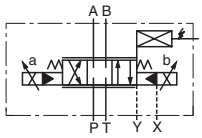

External Pilot / External Drain Type

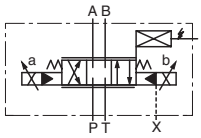

External Pilot / Internal Drain Type

Model Number Designation

F-	ELDFH	G	-04	-280	-3C2P	-XY	-E	T	-10	*
Special Seals	Series Number	Type of Mounting	Valve Size	Rated Flow L/min (U.S.GPM)	Spool Type	Direction of Flow	Pilot Connection	Drain Connection	Design Number	Design Standards
F: Special Seals for Phosphate Ester Type Fluids (Omit if not required)	**ELDFH**: High Response (Two Stage) Type Proportional Electro-Hydraulic Directional and Flow Control Valves	**G**: Sub-Plate Mounting	**04**	**280**: 280(74.0)	3C2 3C40	**XY** : Metre-in • Metre-out	**None**: Internal Pilot	**None**: External Drain	**10**	Refer to ★1
			06	**350**: 350(92.5) **500**: 500(132.1)	3C2P 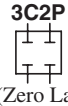 (Zero Lap)		**E**: External Pilot	**T**: External Drain	**10**	

★1. Design Standards: None ..... Japanese Standard "JIS" and European Design Standard
90 ..... N. American Design Standard

Applicable Power Amplifiers

For stable performance, it is recommended that Yuken's applicable power amplifiers be used (for details see page 786).
Model Numbers: AMB-EL-∗-∗-∗-10

Attachment

Mounting Bolts

Model Numbers	Socket Head Cap Screw			
	Japanese Standard "JIS" European Design Standard	N. American Design Standard	Qty.	Tightening Torque Nm (in. lbs.)
ELDFHG-04	M6 × 55 Lg. M10 × 60 Lg.	1/4-20 UNC × 2-1/4 Lg. 3/8-16 UNC × 2-1/2 Lg.	2 4	12 - 15 (106 - 133) 58 - 72 (513 - 637)
ELDFHG-06	M12 × 85 Lg.	1/2-13 UNC × 3-1/2 Lg.	6	100 - 123 (885 - 1089)

ELDFHG-04-280-∗-XY-∗-∗-10/1090

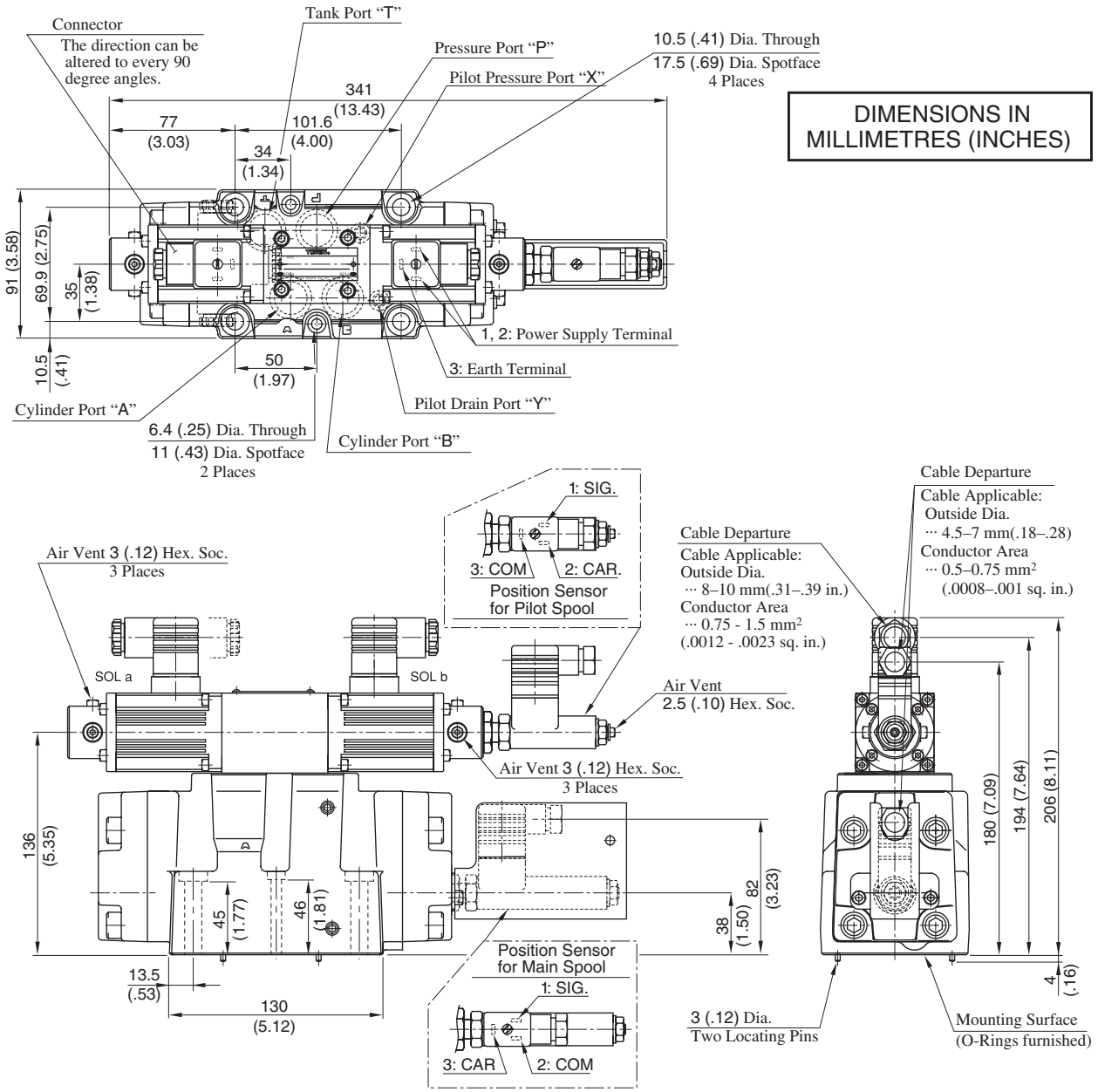

ELDFHG-06-∗-∗-XY-∗-∗-10/1090

DIMENSIONS IN MILLIMETRES (INCHES)

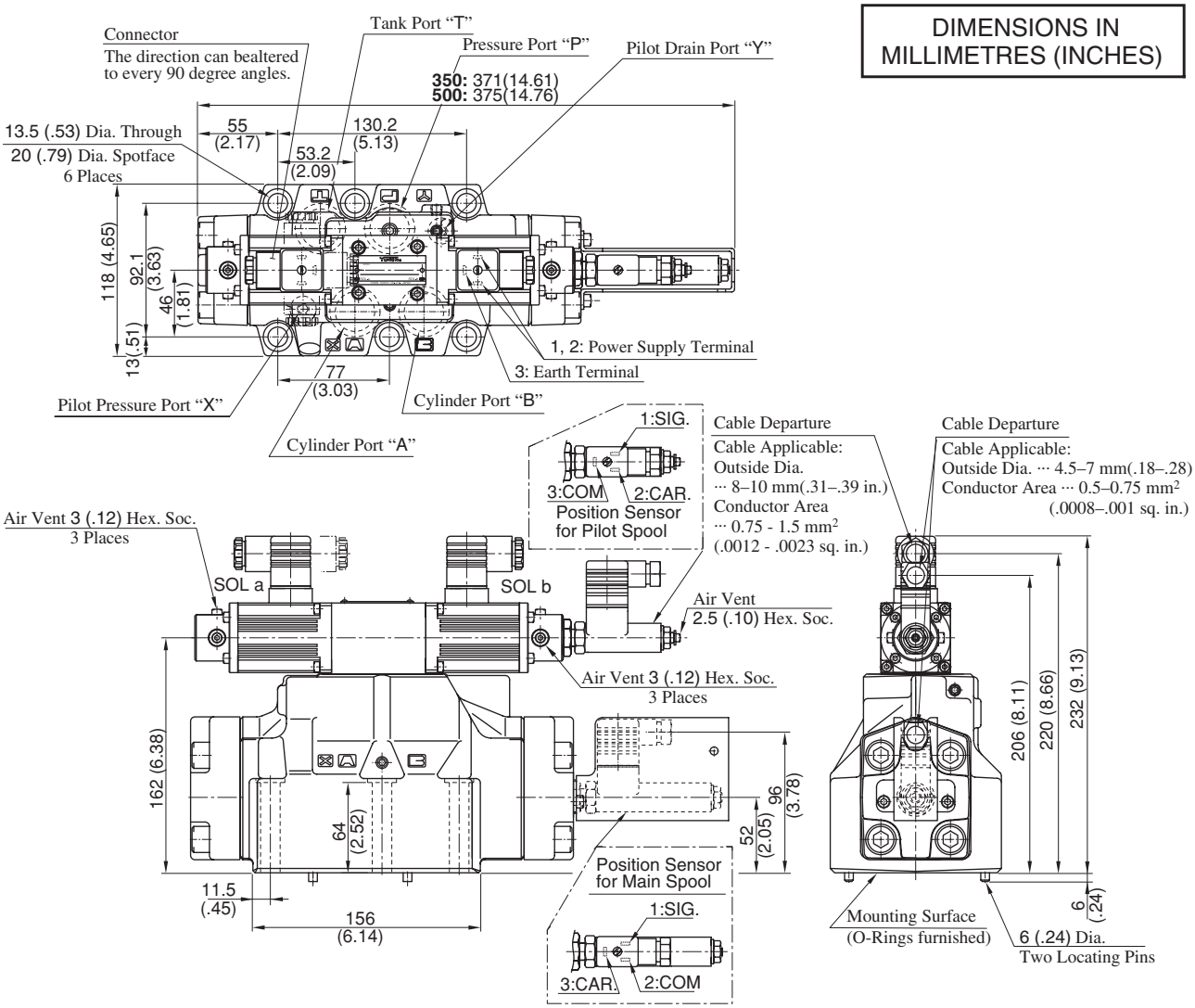

Dimensions of valve mounting surface

Prepare a mounting surface as shown to the below.
Also finish it finely.

● ELDFHG-04

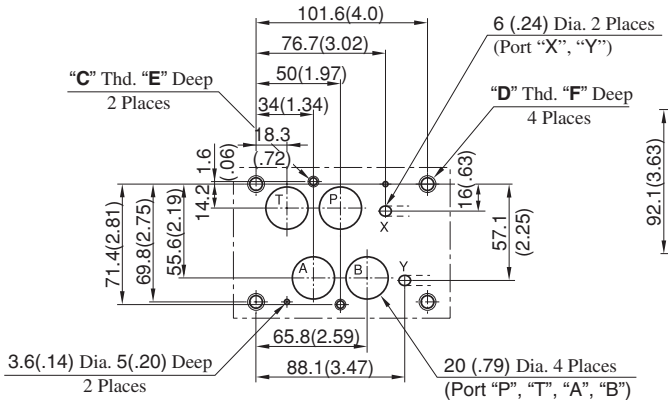

● ELDFHG-06

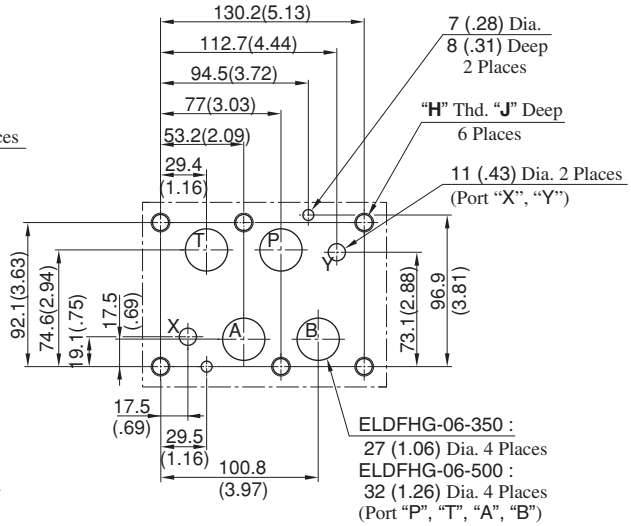

Model Numbers	"C" Thd.	"D" Thd.	"E" mm (in.)	F mm (in.)
ELDFHG-04-∗-∗-∗-∗-∗-10	M6	M10	12 (.47)	17 (.67)
ELDFHG-04-∗-∗-∗-∗-∗-1090	1/4-20 UNC	3/8-16 UNC	14 (.55)	20 (.79)

Model Numbers	"H" Thd.	J mm (in.)
ELDFHG-06-∗-∗-∗-∗-∗-10	M12	24 (.94)
ELDFHG-06-∗-∗-∗-∗-∗-1090	1/2-13 UNC	28 (1.10)

Input Voltage vs. Flow Rate

Valve Pres. Diff. : 1 MPa (145 PSI)
Viscosity : 30 mm²/s (141 SSU)

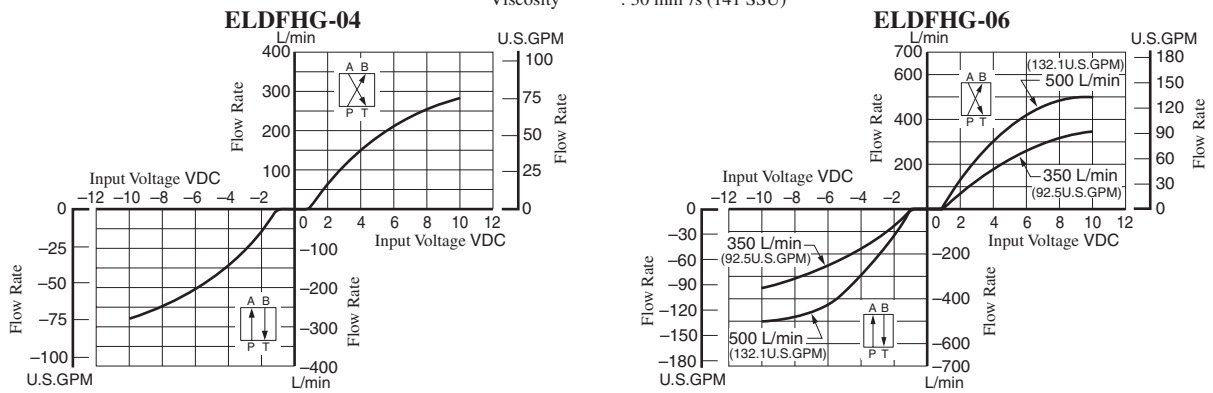

Load Flow Characteristics

Viscosity : 30 mm²/s (141 SSU)

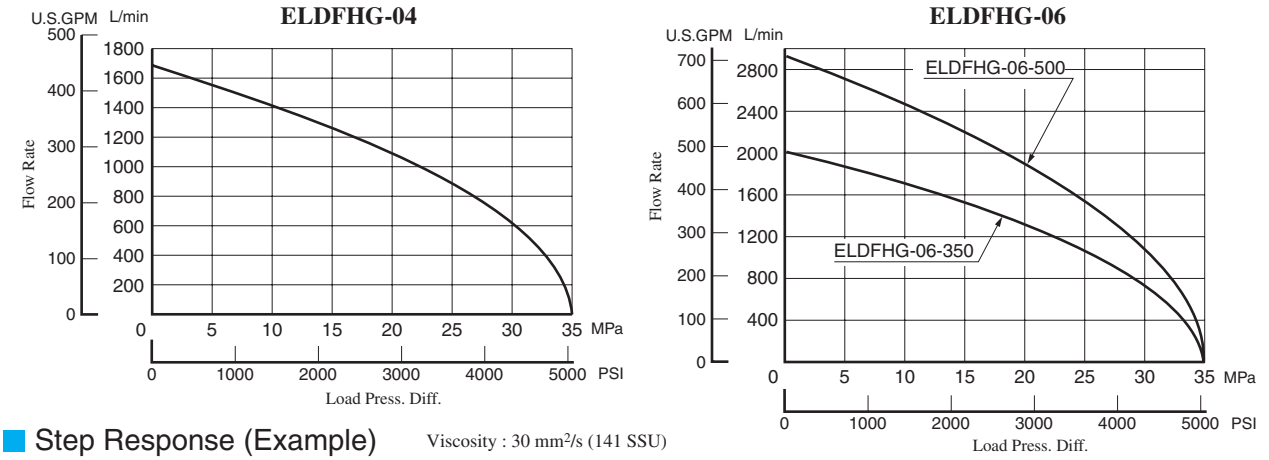

Step Response (Example)

Viscosity : 30 mm²/s (141 SSU)

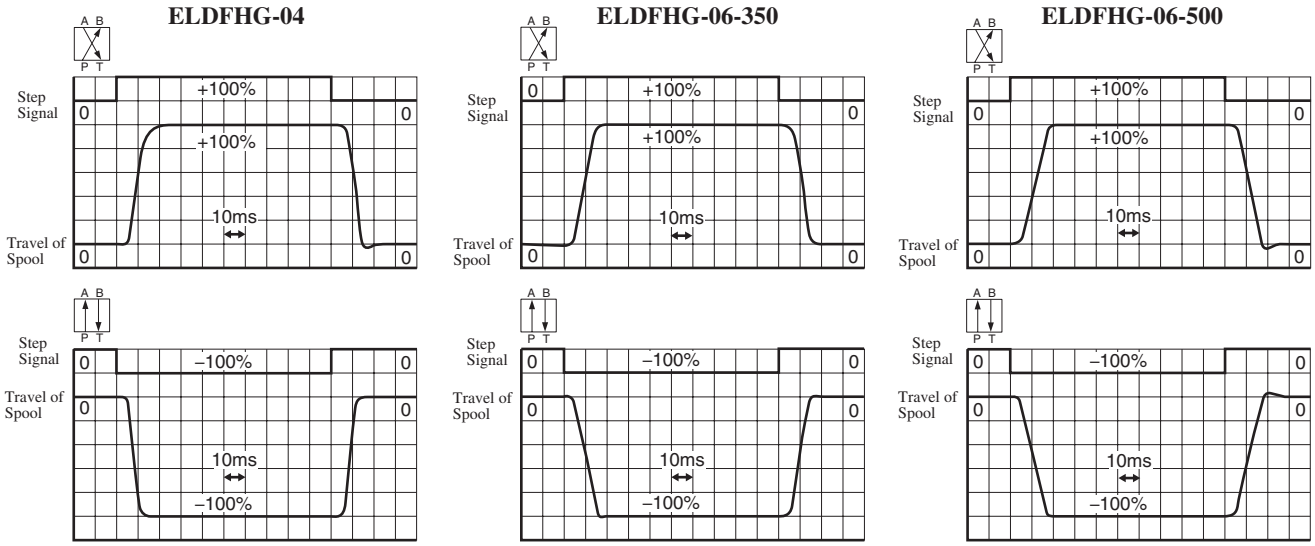

Frequency Response

Input Signal : 0 ±25 %
Hydrauric Circuit : Port A/B Closed
Supply and Pilot Pressure : 14 PMa (2030 PSI)
Viscosity : 30 mm²/s (140 SSU)

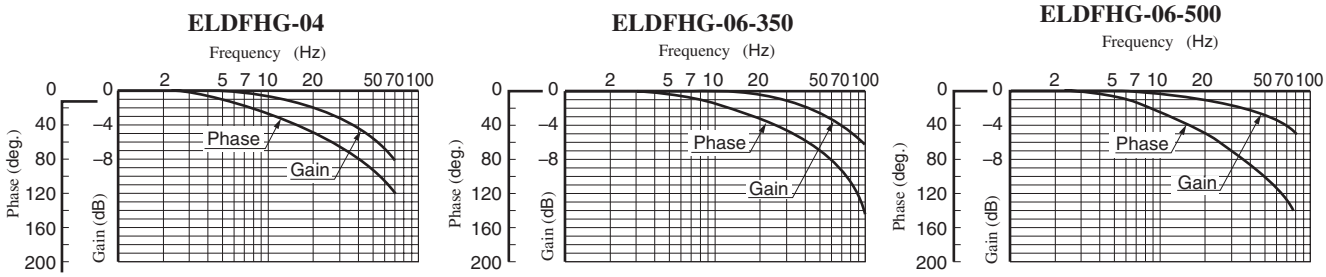

List of Seals and Pilot Valve

ELDFHG-04-280-∗-XY-∗∗-10/1090

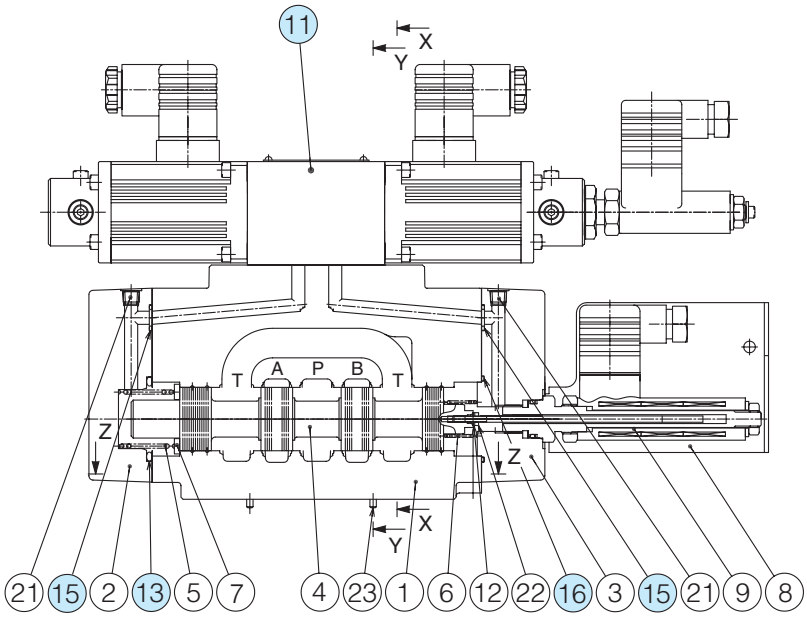

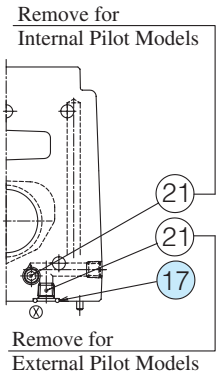

Section Y-Y

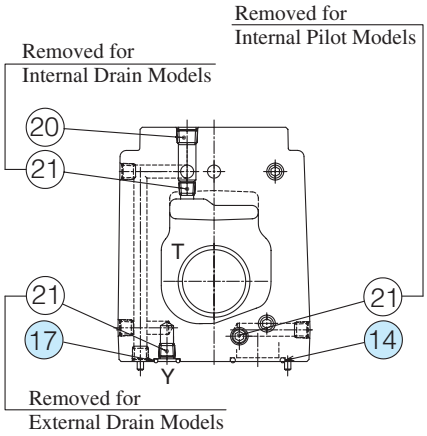

Section X-X

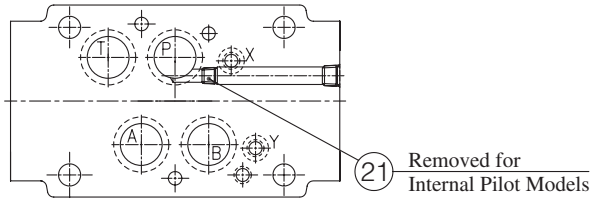

Section Z-Z

List of Seals

Item	Name of Parts	Part Numbers	Qty.	Remarks
13	O-Ring	SO-NB-P39	1	Included in Seal Kit Kit No.: KS-ELDFHG-01-10
14	O-Ring	SO-NB-P22	4	
15	O-Ring	SO-NB-P9	2	
16	O-Ring	SO-NB-A029	1	
17	O-Ring	SO-NB-A012	2	

Pilot Valve

Valve Model No.	(11) Pilot Valve Model No.
ELDFHG-04	ELDFG-01-30-3C2P-XY-1004

Note) See ELDFG-01-∗-∗-XY-10/1090 on page 758 for the corresponding seal and solenoid assembly for the pilot valve.

Note: When ordering seals, pease specify the seal kit number from the table above. In addition to the above o-rings, seals for pilot valve are included in the seal kit. For the detail of the pilot valve seals, see page 758.

List of Seals and Pilot Valve

ELDFHG-06-∗-∗-XY-∗∗-10/1090

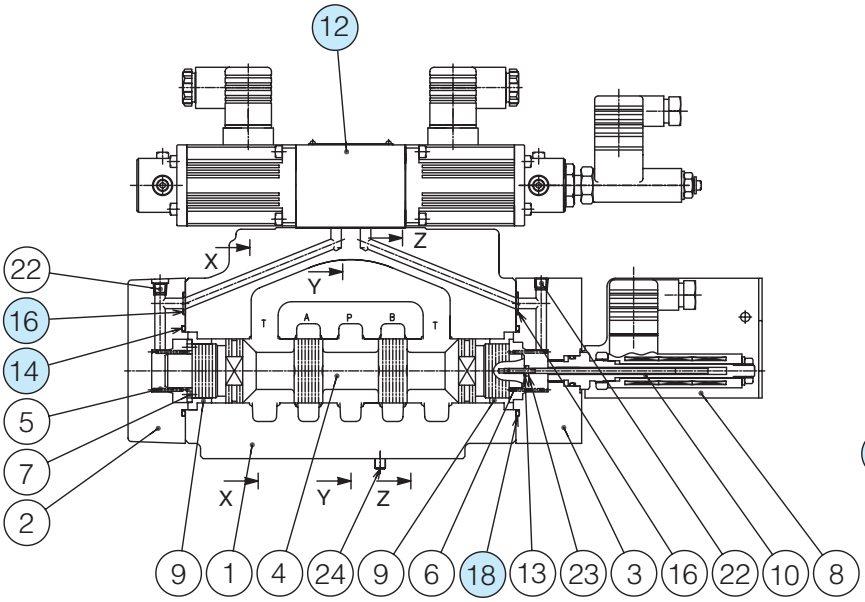

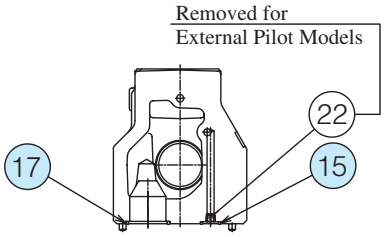

Section X-X

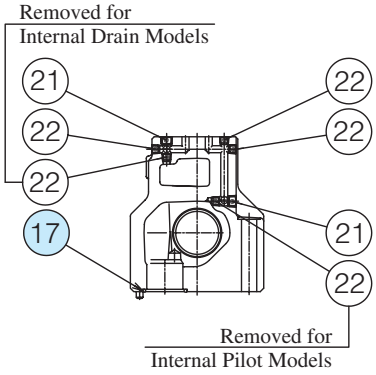

Section Y-Y

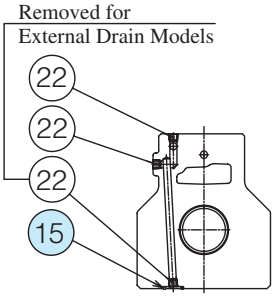

Section Z-Z

List of Seals

Item	Name of Parts	Part Numbers		Qty.
		ELDFHG-06-350	ELDFHG-06-500	
14	O-Ring	SO-NB-P40	SO-NB-A135	1
15	O-Ring	SO-NB-P14		2
16	O-Ring	SO-NB-P10		2
17	O-Ring	SO-NB-A123	SO-NB-A126	4
18	O-Ring	SO-NB-A030	SO-NB-A135	1

Note: When ordering seals, pease specify the seal kit number from the table above. In addition to the above o-rings, seals for pilot valve are included in the seal kit. For the detail of the pilot valve seals, see page 758.

Seal Kit Numbers

Valve Model Numbers	Seal Kit Numbers
ELDFHG-06-350-∗-XY-∗∗-10/1090	KS-ELDFHG-06-350-10
ELDFHG-06-500-∗-XY-∗∗-10/1090	KS-ELDFHG-06-500-10

Pilot Valve

Valve Model No.	⑫ Pilot Valve Model No.
ELDFHG-06	ELDFG-01-30-3C2P-XY-1006

Note) See ELDFG-01-∗-∗-XY-10/1090 on page 758 for the corresponding seal and solenoid assembly for the pilot valve.

Power Amplifiers / Setting Adjusters For Proportional Electro-Hydraulic Control Valves

These are power amplifiers to be used exclusively to operate the electro-hydraulic proportional valves. Various type and models on available for a variety of applications.

Type	Model Numbers	Applicable to Control Valve	Function
DC Input	AME-D-10-∗-20	Pressure or Flow Control (For 10 Ω Sol.)	By giving the command of DC voltage (0 – 10 V) to the amplifier, current in proportion to that voltage will flow into the solenoid of the control valve in order to control pressure or flow rate. An external setting unit which makes the command voltage of 0 – 10 V and a DC power supply (or a function generator) are necessary, but if a variable resistor for external setting is only one, the internal power supply for amplifier can be used. 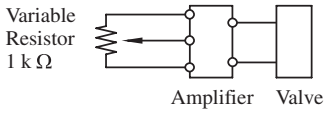
	AME-D-40-∗-40	Flow Control (For 40 Ω Sol.)	
	AME-D2-H1-∗-12	Flow Control and Relief (For 40Ω -10Ω Sol.)	
	AME-D2-1010-∗-11	Flow Control and Relief (For 10Ω -10Ω Sol.)	
DC Input-Feedback	SK1022-∗-∗-11	Pressure or Flow Control (For 10 Ω Sol.)	Basically, this is a DC input type with a feedback operating unit. This is for high-accuracy control and used to feedback the pressure or flow rate converted to electric signals.
	AME-DF-S-∗-22	Flow Control (For 40 Ω Sol.)	
Slow Up-Down	AME-T-S-∗-22	Flow Control (For 40 Ω Sol.)	A slow up-down signal generator and the functions of a DC input type are incorporated. This is used to control the pressure or flow rate by slow up-down pattern and the command signals are given by relay contacts, limit switches, timer contacts, etc.
DC Input For DC Power 24 V DC	SK1015-11 AMN-D-10 AMN-W-10	Pressure or Flow Control (For 10 Ω Sol.)	An amplifier which is operated by a battery power supply (24 V). By giving the command of DC voltage to the amplifier, current in proportion to that voltage will flow in the solenoid of the control valve in order to control pressure or flow rate. An external setting unit which makes the command voltage and a DC power supply (or a function generator) are necessary, but if a variable resistor for external setting is only one, the internal power supply for amplifier can be used. 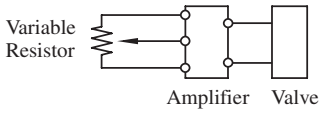 SK1015 amplifier can be used in automobile construction machine.
	SK1091-D24-10	Directional and Flow Control	
DC Input with Minor Feedback	AMN-L-01-∗-∗-10	High Response Type Directional and Flow Control	An amplifier which is operated by a battery power supply (24V). This is for high-response, high-accuracy control and used to feedback the pressure or flow rate converted to electric signals.
	AMB-EL-∗-∗-∗-∗-10		
Shockless	AMN-G-10	Shockless Directional and Flow Control	Outputs shockless patterns, low speed (Level 1) high-speed (Level 2) low speed (Level 3). Shockless speed control is enabled just by providing SOL a and SOL b only contact signals in the same control mode as the mode for the "G" series of shifting time adjustable type shockless valves.

Instructions

- The power amplifiers should be kept away from hot and humid conditions which may deteriorate some components of the power amplifiers. They also should be installed in the clean and dry place where the vibration is minimal.
  Please avoid to install the power amplifiers in the complete enclosure or get them enclosed totally as they need to radiate the heat from semiconductors or ICs inside.
- Please use shielded wires for input signal transmission to prevent the amplifiers from any interference such as noise from outside.

Power Amplifiers For 10Ω Series Control Valves

These power amplifiers are used to drive the 10Ω series proportional electro-hydraulic pressure or flow control valves.

Model Number Designation

AME	-D	-10	-100	-20
Series Number	Type of Function	Coil Resistance of Valve	Power Supply	Design Number
AME	**D**: DC Input Type	**10**: 10 Ω	**100**: 100 V AC **200**: 200 V AC	**20**

SK1022	-A	-100	-11
Series Number	Type of Function	Power Supply	Design Number
SK1022: DC Input-Feedback Type	**A**: Polarity of Feedback Voltage...(–) **B**: Polarity of Feedback Voltage...(+)	**100**: 100 V AC **200**: 200/220 V AC	**11**
SK1015: DC Input Type for DC Power Supply	———	———★	**11**

★Use with 24 V DC since this is for a battery power supply.

Applicable to Valve

Name of Valve	Model Numbers
Pilot Relief Valves	EDG-01∗
Relief Valves	EBG-03 EBG-06 EBG-10
Relieving and Reducing Valves	ERBG-06 ERBG-10
10 Ω Series Flow Control Valves	EFG-03/06 EFCG-03/06 (51 Design)
Flow Control and Relief Valves	EFBG-03 EFBG-06 EFBG-10

Specifications

Description \ Model No.	AME-D-10-∗-20	SK1022-A-∗-11	SK1022-B-∗-11	SK1015-11
Type of Fuction	DC Input Type	DC Input Feedback Type	DC Input Feedback Type	DC Input Type
Max. Output Current	1 A (10 Ω Solenoid)	1 A (10Ω Solenoid)	1 A (10Ω Solenoid)	0.9 A (10Ω Solenoid)
Max. Input Voltage	+ 10 V DC	+ 10 V DC	+ 10 V DC	+ 10 V DC
Feedback Voltage	——	0 to –10V	0 to +10V	——
Input Impedance	10 kΩ	50 kΩ	50 kΩ	50 kΩ
Max. Gain	1 A / 5 V	1 A / 0.5 V	1 A / 0.5 V	0.9 A / 5 V
Dither	Variable	Fix	Fix	Fix
Temperature Drift (Max.)	0.2 mA /°C	0.2 mA /°C	0.2 mA /°C	1 mA /°C
Power Supply	100 V AC, 200 V AC (50/60 Hz)★	100 V AC, 200/220 V AC ±10% (50/60 Hz)		22-30 V DC
Power Input (Max.)	55 VA	45 VA	45 VA	25 VA
Ambient Temperature	0-50°C (32-122°F)	0-50°C (32-122°F)	0-50°C (32-122°F)	0-50°C (32-122°F)
External Setting Resistance	1 kΩ	1 kΩ	1 kΩ	10 kΩ
Mass	2.1 kg (4.6 lbs.)	4.5 kg (9.9 lbs.)	4.5 kg (9.9 lbs.)	0.4 kg (.88 lbs.)

★Serviceable Range; 100 VAC can be used from 90 to 132 VAC, 200 VAC can be used from 180 to 264 VAC.

Instructions

Power supply for the setting adjuster can be provided from this power amplifier, but for only one.
However, please use the variable resistor or potentiometre of which impedance is 1 kΩ (in case of madel SK1015, use 10 kΩ) for the setting adjuster.

AME-D-10-∗-20

[Example Diagram]

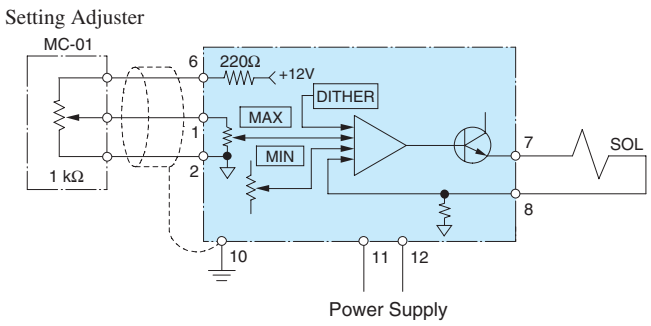

● Detail of Terminal Board

Terminal Number	Name	
1	Input Signal	IN
2	Input Signal	COM
3	—	
4	—	
5	Input Signal	COM
6	Internal Power Supply	+12 V
7	Output to Valve Solenoid	SOL
8		
9	—	
10	Ground	G
11	Power Supply 100/200 VAC	
12		

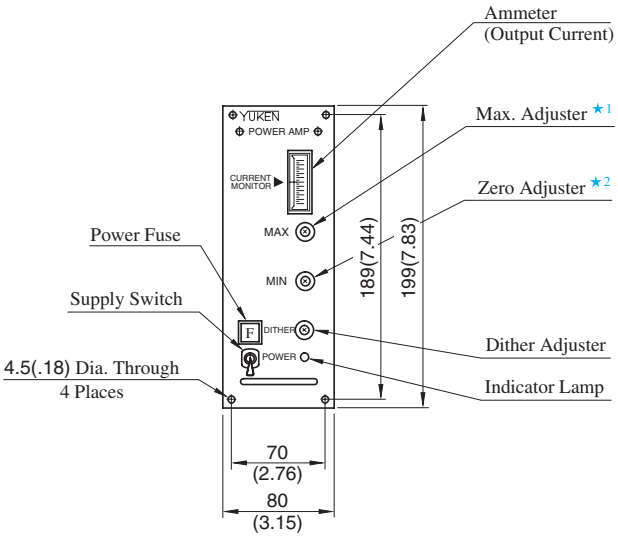

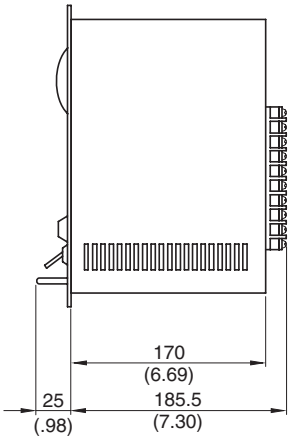

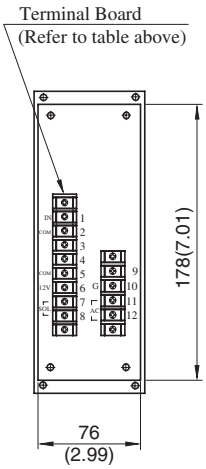

★1. Adjustment of upper limit of usable range
★2. Adjustment of lower limit of usable range

DIMENSIONS IN MILLIMETRES (INCHES)

SK1022-$^{A}_{B}$-∗-11

[Example Diagram]

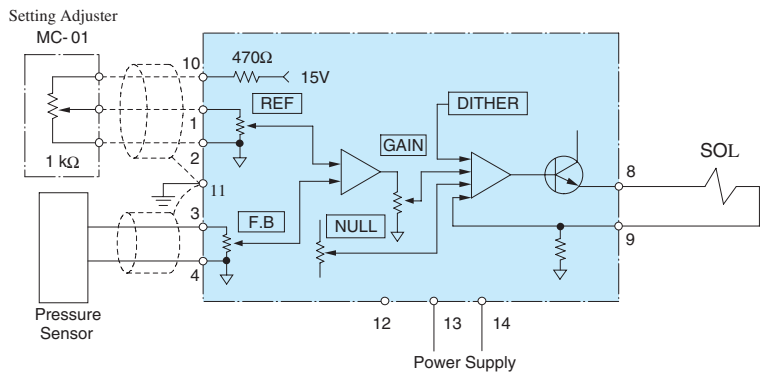

● Detail of Terminal Board

Terminal Number	Name	
1	Input Signal	REF
2	Input Signal	COM
3	Feedback Signal	F.B
4	Feedback Signal	COM
5	—	
6	—	
7	—	
8	Output to Valve Solenoid	SOL
9		
10	Power Supply for Setting Adjuster (10 V at 1 kΩ)	+15V
11	Ground	G
12	Power Supply 100 V AC, 200V AC : 13, 14 220 V AC : 12, 14	
13		
14		

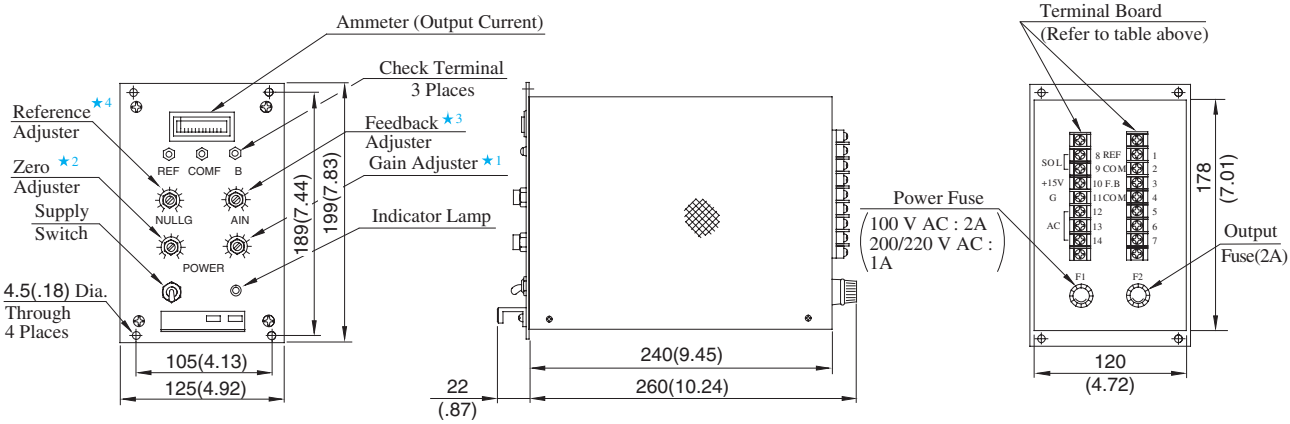

★1. Adjustment of upper limit of usable range
★2. Adjustment of lower limit of usable range
★3. Adjustment of feedback voltage ratio
★4. Adjustment of input voltage ratio

DIMENSIONS IN MILLIMETRES (INCHES)

H
Power Amplifiers

SK1015-11

[Example Diagram]

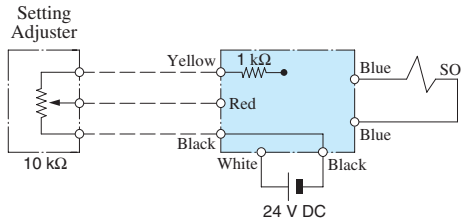

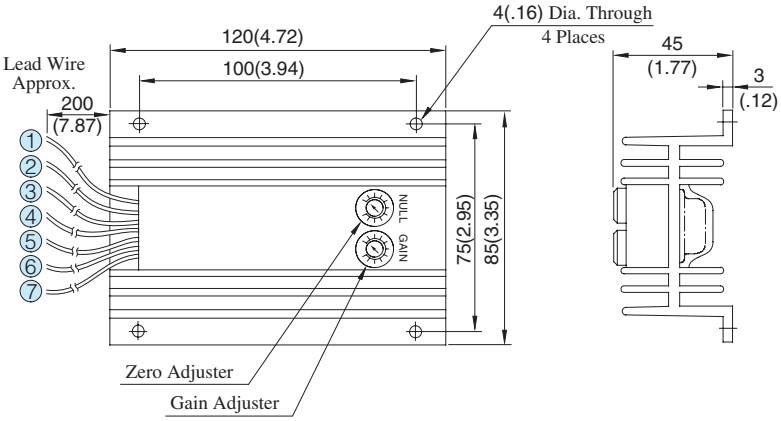

Lead Wire Detail

① White.....Plus of 24 V DC
② Black.....Zero of 24 V DC
③ Blue..... } Output to Valve Solenoid
④ Blue..... } Output to Valve Solenoid
⑤ Yellow.....15 V Power Supply for Setting Adjuster (10 V at 10 kΩ)
⑥ Red.....Input Signal
⑦ Black.....Zero of Input Signal

DIMENSIONS IN MILLIMETRES (INCHES)

Instructions

Supply Switch

The power amplifier has no power supply switch.
As soon as it is connected to a power supply, it comes to be alive. Provide a power switch externally.

Compact Power Amplifiers For 10Ω Series Control Valves

Compact power amplifiers for 10Ω proportional solenoids. The power supply is 24 V DC. It uses a new circuitry to be slow to heat.

Model Number Designation

AMN	-D	-10
Series Number	Type of Function	Design Number
AMN	D : DC Input Type	10

Specifications

Description \ Model No.	AMN-D-10
Type of Function	DC Input Type
Max. Output Current	1 A (10Ω Solenoid)
Power Input (Max.)	+ 10 V DC
Input Impedance	10 kΩ
Max. Gain	1 A / 5 V
Dither	Variable
Temperature Drift (Max.)	0.2 mA /°C
Power Supply	24 V DC (20 - 30 V DC)
Max. Input Power	25 W
Ambient Temperature	0 - 50°C (32 - 122°F)
External Setting Resistance	1 kΩ
Approx. Mass	0.2 kg (.44 lbs.)

Applicable to Valve

Name of Valve	Model Numbers
Pilot Relief Valves	EDG-01∗
Relief Valves	EBG-03 EBG-06 EBG-10
Relieving and Reducing Valves	ERBG-06 ERBG-10
10Ω Series Flow Control Valves	EFG-03/06 EFCG-03/06 (51 Design)
10Ω-10Ω Series High Flow Series Flow Control and Relief Valves	EFBG-03 EFBG-06 EFBG-10

AMN-D-10

DIMENSIONS IN MILLIMETRES (INCHES)

[Example Diagram]

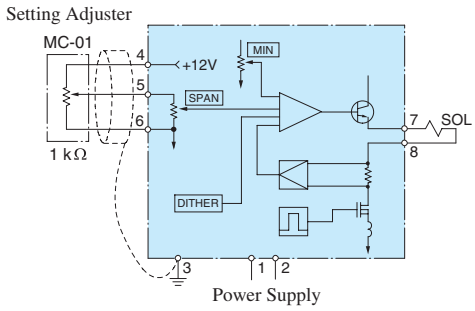

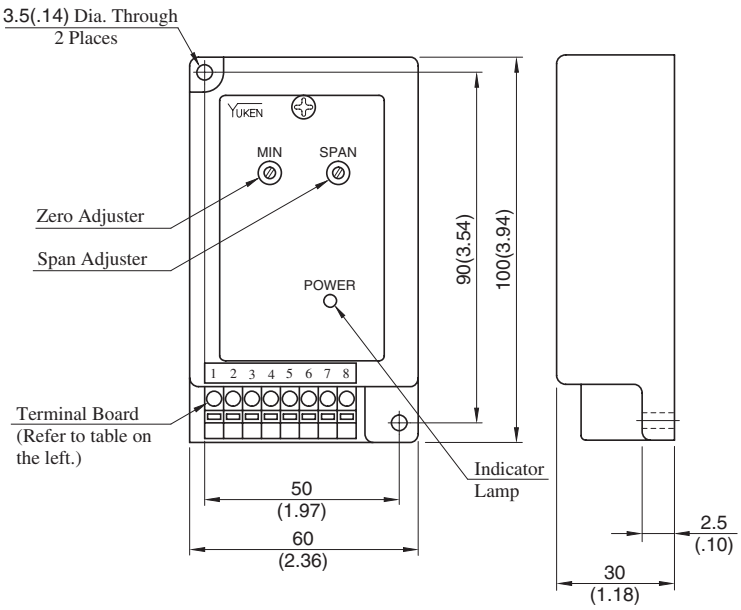

Detail of Terminal Board

Terminal Number	Name	
1	Power Supply	+24 V
2	Power Supply	0 V
3	Ground	G
4	Internal Power Supply	+12 V
5	Input Signal	IN
6	Input Signal	COM
7	Output to Valve Solenoid	SOL
8		

H
Power Amplifiers

Power Amplifiers For 40Ω Series Flow Control Valves

These power amplifiers are used to drive the 40Ω series proportional electro-hydraulic flow control valves.

Model Number Designation

AME	-D	-40	-100	-40
Series Number	Type of Function	Coil Resistance of Valve	Power Supply	Design Number
AME	**D**: DC Input Type	**40**: 40 Ω	**100**: 100 V AC **200**: 200 V AC	40

AME	-DF	-S	-100	-22
Series Number	Type of Function	Type of Mounting	Power Supply	Design Number
AME	**DF**: DC Input Feedback Type	**S**: Panel Mounting Type	**100**: 100 V AC	22
	T: Slow Up Down Type		**200**: 200/220 V AC	22

Applicable to Valve

Name of Valve	Model Numbers
40 Ω Series Flow Control Valves	EFG EFCG -02 (31 Design)
	EFG EFCG -03 (26 Design)
	EFG EFCG -06 (22 Design)
	EFG EFCG -10 (11 Design)

Specifications

Description \ Model No.	AME-D-40-∗-40	AME-DF-S-∗-22	AME-T-S-∗-22
Type of Fuction	DC Input Type	DC Input Feedback Type	Slow Up Down Type
Max. Output Current	0.8 A (40 Ω Solenoid)	0.8 A (40 Ω Solenoid)	0.8 A (40 Ω Solenoid)
Max. Input Voltage	+ 10 V DC	+ 10 V DC	—
Feedback Voltage	—	0 to –10 V	—
Input Impedance	10 kΩ	50 kΩ	—
Slow Up Down Range	—	—	0.05 – 1 s/100 mA
Max. Gain	0.8 A / 5 V	0.8 A / 5 V	—
Dither	Fix	Fix	Fix
Temperature Drift (Max.)	0.2 mA /°C	0.2 mA /°C	0.2 mA /°C
Power Supply	100 V AC, 200/220 V AC ±10% (50/60 Hz)		
Power Input (Max.)	70 VA	90 VA	90 VA
Ambient Temperature	0–50°C (32–122°F)	0 – 50°C (32 – 122°F)	0 – 50°C (32 – 122°F)
External Setting Resistance	1 kΩ	1 kΩ	—
Approx. Mass	2.8 kg (6.2 lbs.)	4.5 kg (9.9 lbs.)	4.5 kg (9.9 lbs.)

Instructions

- **Power supply of the outside setting adjuster**

When DC input type (AME-D-40) or DC input-feedback type (AME-DF-S) power amplifier is used, power supply for the setting adjuster can be provided from this power amplifier, but for only one. However, please use the variable resistor or potentiometre of which impedance is 1 kΩ for the setting adjuster.

AME-D-40-∗-40

[Example Diagram]

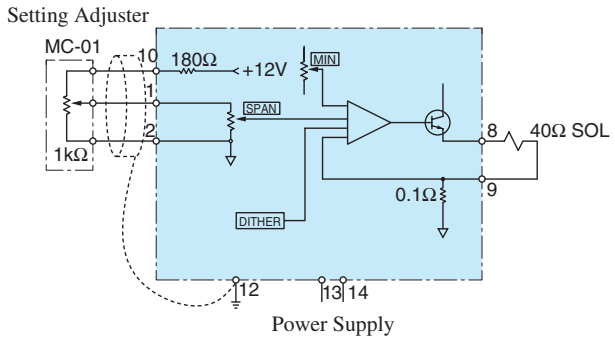

Detail of Terminal Board

Terminal Number	Name	
1	Input Signal	IN
2	Input Signal	COM
3	—	
4	—	
5	Internal Power Supply	–5V
6	Feedback Signal	MFB
7		COM
8	Output to Valve Solenoid	SOL
9		
10	Internal Power Supply	+12V
11	—	
12	Frame Ground	FG
13	Power Supply	VAC
14		VAC

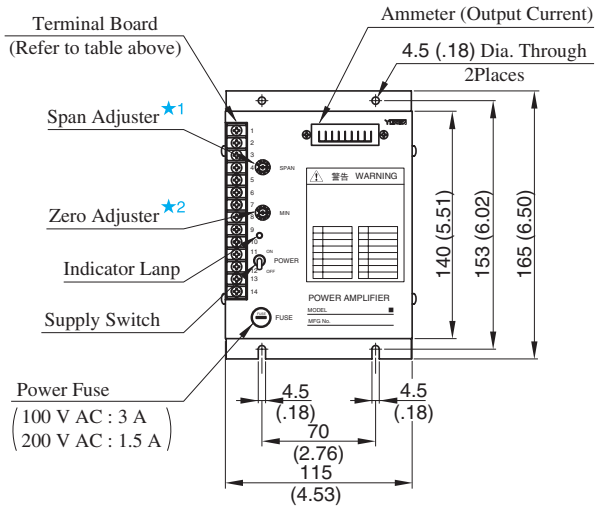

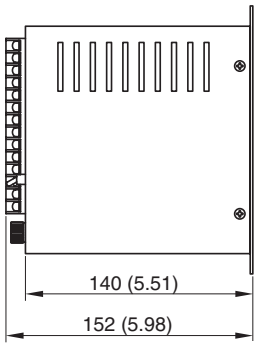

★1. Adjustment of upper limit of usable range
★2. Adjustment of lower limit of usable range

DIMENSIONS IN MILLIMETRES (INCHES)

H
Power Amplifiers

AME-DF-S-∗-22

[Example Diagram]

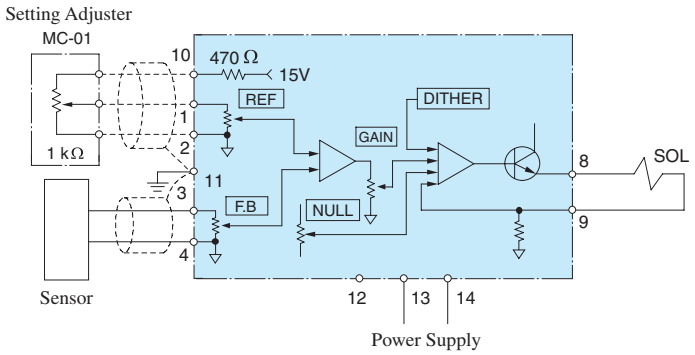

Detail of Terminal Board

Terminal Number	Name	
1	Input Signal	REF
2	Input Signal	COM
3	Feedback Signal	F.B
4	Feedback Signal	COM
5	—	
6	—	
7	—	
8	Output to Valve Solenoid	SOL
9		
10	Power Supply for Setting Adjuster (10 V at 1 kΩ)	+15 V
11	Ground	G
12	Power Supply 100 V AC, 200 V AC: 13, 14 220 V AC: 12, 14	
13		
14		

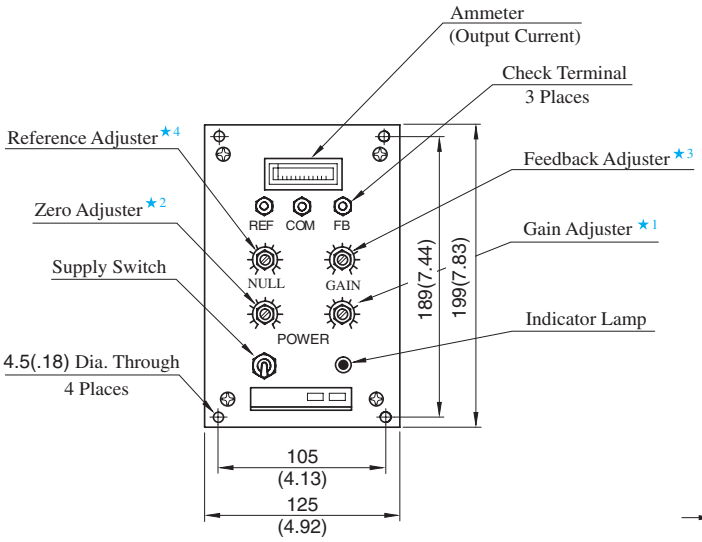

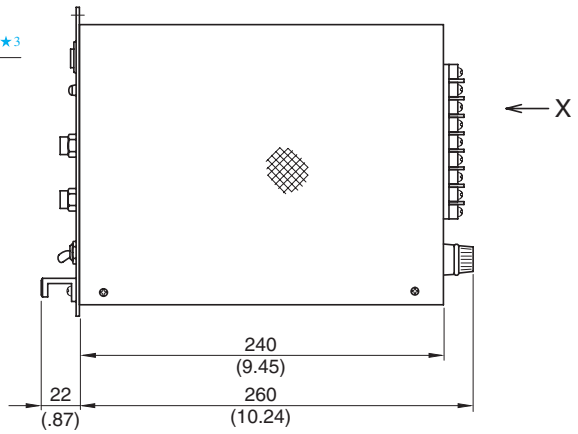

★1. Adjustment of upper limit of usable range
★2. Adjustment of lower limit of usable range
★3. Adjustment of feedback voltage ratio
★4. Adjustment of input voltage ratio

DIMENSIONS IN MILLIMETRES (INCHES)

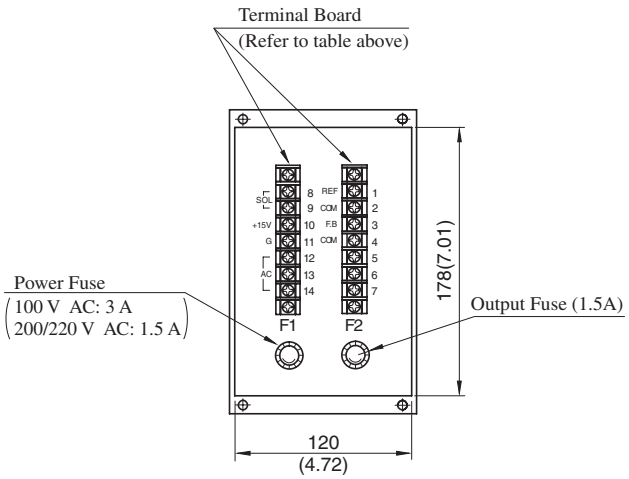

View Arrow X

AME-T-S-∗-22

[Example Diagram]

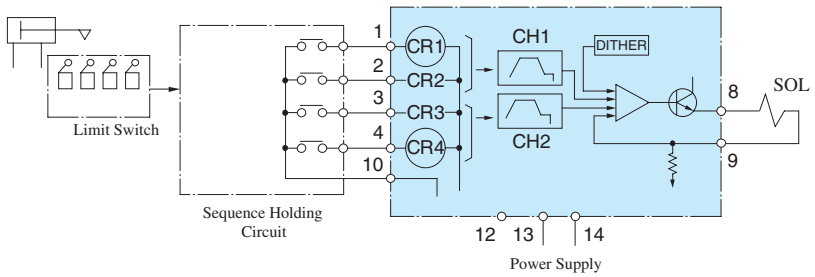

● Detail of Terminal Board

Trminal Number	Name	
1	Input Command	CR1
2	Input Command	CR2
3	Input Command	CR3
4	Input Command	CR4
5	—	
6	—	
7	—	
8	Output to Valve Solenoid	SOL
9		
10	Input Command	CR. COM
11	Ground	G
12	Power Supply	
13	100 V AC, 200 V AC: 13, 14	
14	220 V AC: 12, 14	

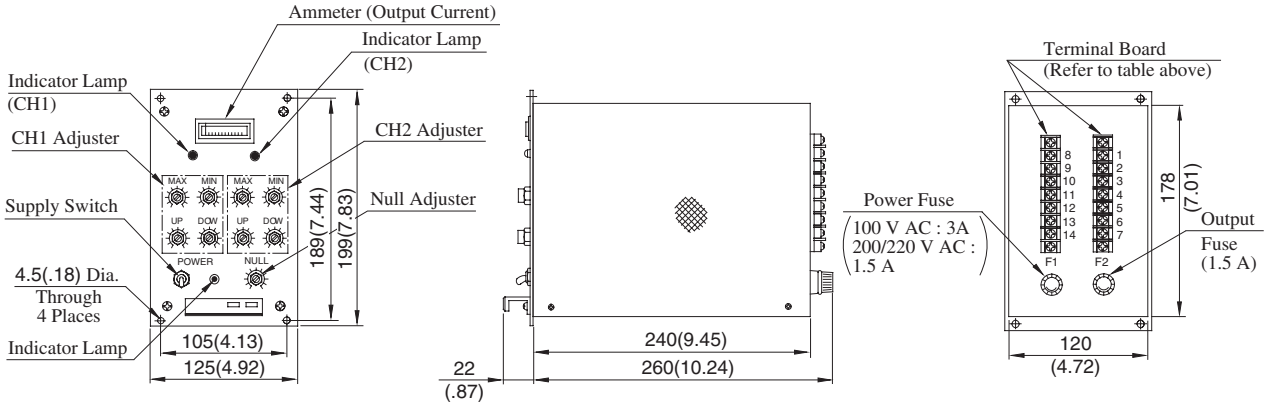

[Output Current Pattern]

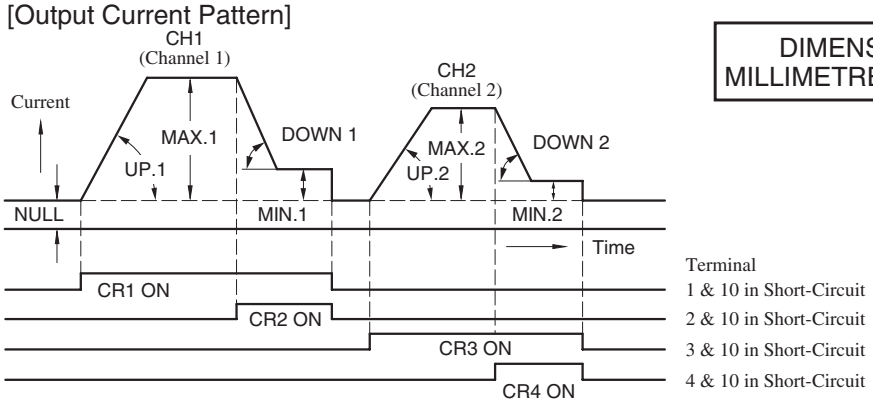

DIMENSIONS IN MILLIMETRES (INCHES)

Note: 1. CR1 to CR4: Relays in the power amplifier.
The output patterns CH1 and CH2 can not be obtained simultaneously nor can they be transmitted halfway to another pattern.
2. The words such as MAX, MIN, UP and DOWN show the volume adjustment of the power amplifier.

How to Calculate Accelerating and Decelerating Time (Example)

Question: Wish to accelerate and decelerate the actuator in between 5 L/min (1.32 U.S. GPM) and 25 L/min (6.6 U.S. GPM) in the use of proportional flow control valve model EFG-02-30-31∗.
In such case, what are the manimum and minimun time adjustable for the acceleration and deceleration?

Answer: The input current for EFG-02-30-31∗ at the flow rate of 5 L/min (1.32 U.S. GPM) and 25 L/min (6.6 U.S. GPM) can be obtained respectively from the chart below. The chart shows:

Input current at 5 L/min (1.32 U.S. GPM) 300 mA
Input current at 25 L/min (6.6 U.S. GPM) 520 mA

Then, the difference between the above two can be obtained with the following formula:

520 mA – 300 mA = 220 mA

While, the speecification for the model AME-T-S shows the amplifier's gradient for acceleration or deceleration as being between 0.05 s/100 mA and 1.0 s/100 mA (which means that the minimum time is 0.05 second and the maximum time is 1.0 second for every 100 mA variation).
Therefore, the minimum and maximum adjustable time can be obtained as follows:

$$\frac{220\ \text{mA}}{100\ \text{mA}} \times 0.05\ \text{second} = 0.11\ \text{second (Minimum)}$$

$$\frac{220\ \text{mA}}{100\ \text{mA}} \times 1.0\ \text{second} = 2.2\ \text{second (Maximum)}$$

The result above are as illustrated on the below.

[Flow Pattern]

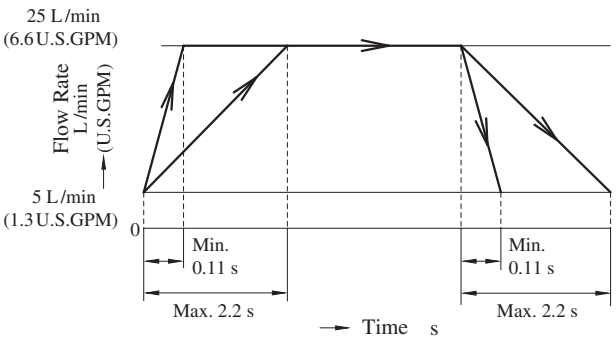

[Input Current vs. Flow]

EFG-02

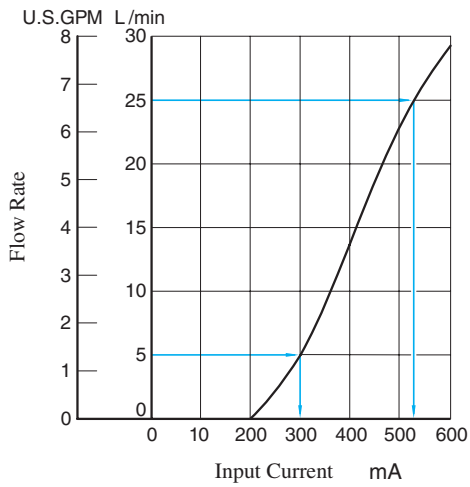

Interchangeability in Installation Current and New Design

Specification

Electricity consumption is different by Current and New Design.
The other specifications remain unchanged.

Electricity Consumption	
Current : 32 Design	New : 40 Design
90 VA	70 VA

Installation Interchangeability : None

AME-D-S-∗-32

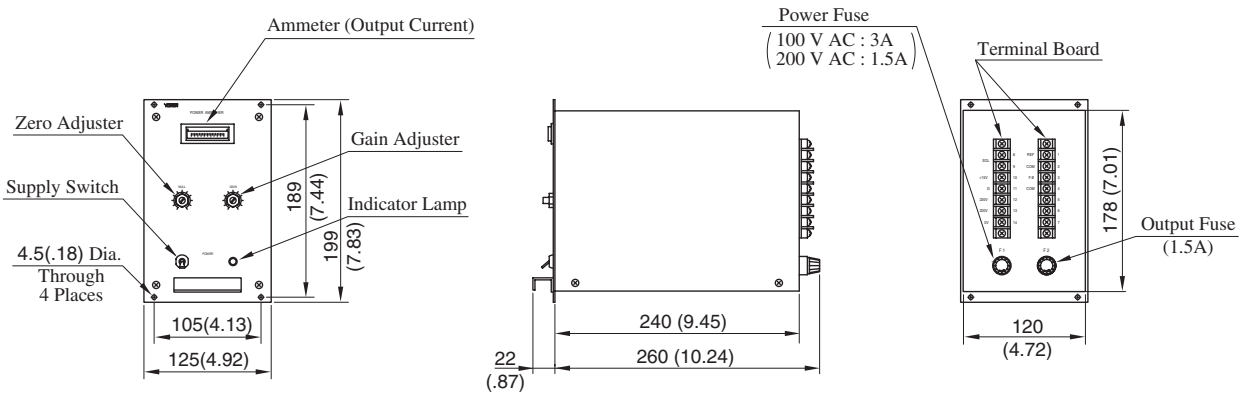

DIMENSIONS IN MILLIMETRES (INCHES)

AME-D-40-∗-40

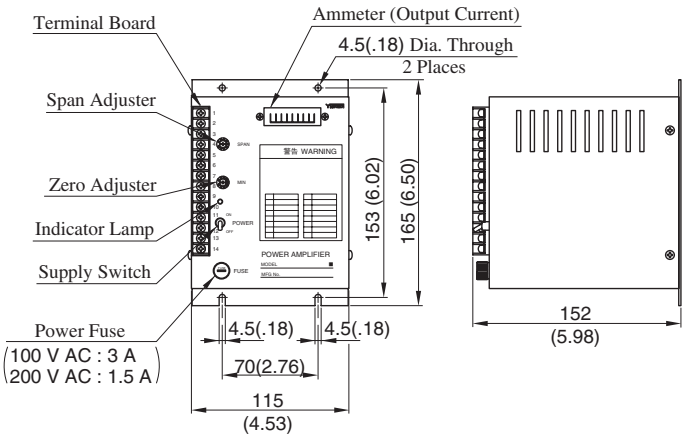

Power Amplifiers For 40Ω - 10Ω Series Control Valves

These power amplifiers are specially designed to combine and incorporate the functions of pressure control (10Ω solenoid) and flow control (40Ω solenoid) into one and can be used for the proportional electro-hydraulic flow control and relief valves of which model numbers are as shown below.

Model Number Designation

AME	-D2	-H1	-100	-12
Series Number	Type of Function	Type of Mounting	Power Supply	Design Number
AME	**D2**: DC Input Type	**H1**: Wall Tapestry Type	**100**: 100 V AC **200**: 200/220 V AC	**12**

Applicable to Valve

Name of Valve	Model Numbers
40Ω - 10Ω Series Flow Control and Relief Valve	EFBG-03-125-C/H-17∗ EFBG-06-250-C/H-17∗ EFBG-10-500-C/H-17∗

Specifications

Model No. / Description	AME-D2-H1-∗-12	
	Flow Controls (40Ω Solenoid)	Pressure Controls (10Ω Solenoid)
Type of Function	DC Input Type	DC Input Type
Max. Output Current	0.8 A (40Ω Solenoid)	1 A (10Ω Solenoid)
Max. Input Voltage	+10 V DC	+10 V DC
Input Impedance	10 kΩ	10 kΩ
Max. Gain	0.8 A / 5 V	1 A / 5 V
Dither	Fix	Fix
Temperature Drift (Max.)	0.2 mA /°C	0.2 mA /°C
Power Supply	100 V AC, 200/220 V AC ± 10% (50/60 Hz)	
Power Input (Max.)	130 VA	
Ambient Temperature	0-50°C (32-122°F)	
External Setting Resistance	1 kΩ	1 kΩ
Approx. Mass	5.6 kg (12.3 lbs.)	

Instructions

Power supply for the setting adjuster up to two set can be provided from this power amplifier. However, please use the variable resistor or potentiometre of which impedance is 1 kΩ for the setting adjuster.

AME-D2-H1-∗-12

[Example Diagram]

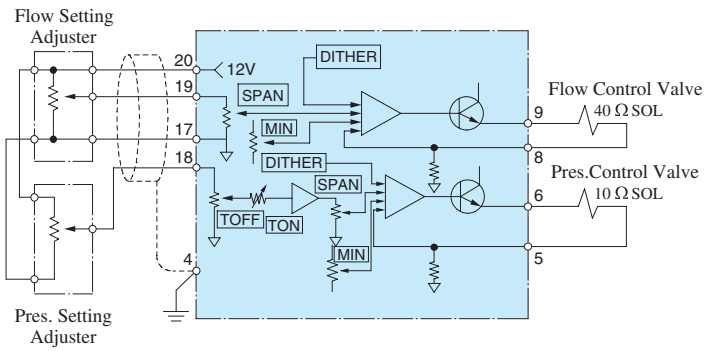

Detail of Terminal Board

Terminal Number	Name	
1	Power Supply 100 V AC, 200 V AC: 1, 2 220 V AC: 1, 3	
2		
3		
4	Ground	G
5	Output to Pressure Control Valve (10 Ω) Solenoid	PR. SOL
6		
7	Ammeter	
8	Output to Flow Control Valve (40 Ω) Solenoid	FL. SOL
9		
10	Ammeter	
11	Common	COM
12	—	
13	—	
14	-12 V OUT	-12 V
15	Common	COM
16	+12 V OUT	+12 V
17	Common	COM
18	Input Signal for PRES.	PR.IN
19	Input Signal for FLOW	FL.IN
20	+12 V OUT	+12 V

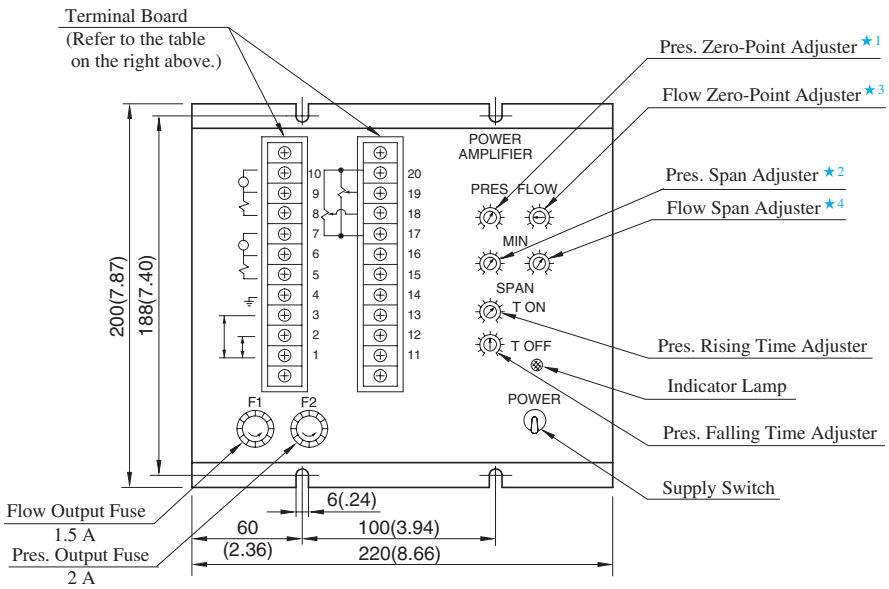

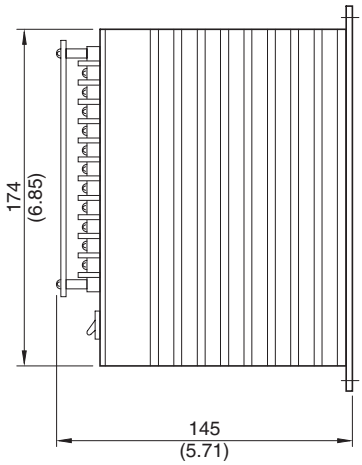

★1. Minimum Pressure Setting
★2. Variable Pressure Range Setting
★3. Minimum Flow Setting
★4. Variable Flow Range Setting

DIMENSIONS IN MILLIMETRES (INCHES)

Power Amplifiers For 10Ω - 10Ω Series Control Valves

These power amplifiers can drive two solenoid of 10Ω load simultaneously or separately, and the control can be done in the same way even though the object is separated by pressure system and flow rate system. Although the display of control unit on the front panel is PRESS and FLOW , they are exactly the same circuit, so there is no distinction between the two system when used.

Model Number Designation

AME	-D2	-1010	-11
Series Number	Type of Function	Coil Resistance of Valve	Design Number
AME	**D2**: DC Input Type	**1010**: 10 Ω × 2	11

Specifications

Description \ Model No.	AME-D2-1010-11
Type of Function	DC Input Type
Max. Output Current	1 A (10Ω Solenoid)
Max. Input Voltage	+ 10 V DC
Input Impedance	10 kΩ
Max. Gain	1 A / 5 V
Dither	Variable 100-300 mA
Temperature Drift (Max.)	0.2 mA /°C
Power Supply	85 - 264 VAC
Power Input (Max.)	120 VA
Ambient Temperature	0-50°C (32-122°F)
External Setting Resistance	1 kΩ
Approx. Mass	4.3 kg (9.5 lbs.)

Applicable to Valve

Name of Valve	Model Numbers
Pilot Relief Valves	EDG-01∗
Relief Valves	EBG-03 EBG-06 EBG-10
Relieving and Reducing Valves	ERBG-06 ERBG-10
10Ω Series Flow Control Valves	EFG-03/06 EFCG-03/06
10Ω-10Ω Series High Flow Series Flow Control and Relief Valves	EFBG-03 EFBG-06 EFBG-10

Applicable to Piston Pump

Name of Pump	Model Numbers
"A" Series Variable Displacement Piston Pump (Proportional Electro-Hydraulic Load Sensing Type)	A16-∗-R-04 A22-∗-R-04 A37-∗-R-04 A56-∗-R-04 A70-∗R04 A90-∗R04 A145-∗R04 Also, double pumps combined with the models listed above and fixed displacement vane pumps.

Instructions

Power supply for the setting adjuster up to two set can be provided from this power amplifier. However, please use the variable resistor or potentiometre of which impedance is 1 kΩ for the setting adjuster.

AME-D2-1010-11

[Example Diagram]

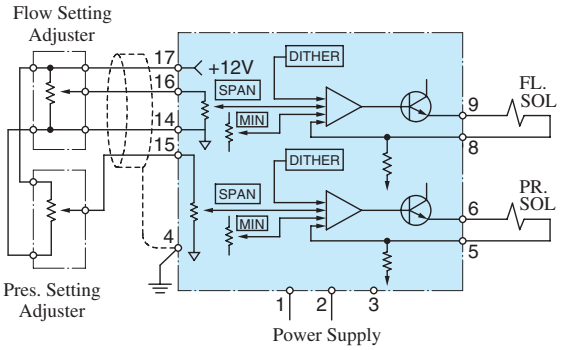

Detail of Terminal Board

Terminal Number	Name	
1	Power Supply 85 - 264 VAC	
2		
3	——	
4	Ground	G
5	Output to Pressure Control Valve Solenoid	PR. SOL
6		
7	Ammeter	
8	Output to Flow Control Valve Solenoid	FL. SOL
9		
10	Ammeter	
11	-12 V OUT	-12 V
12	Common	COM
13	+12 V OUT	+12 V
14	Common	COM
15	Input Signal for PRES.	PR.IN
16	Input Signal for FLOW	FL.IN
17	+12 V OUT	+12 V

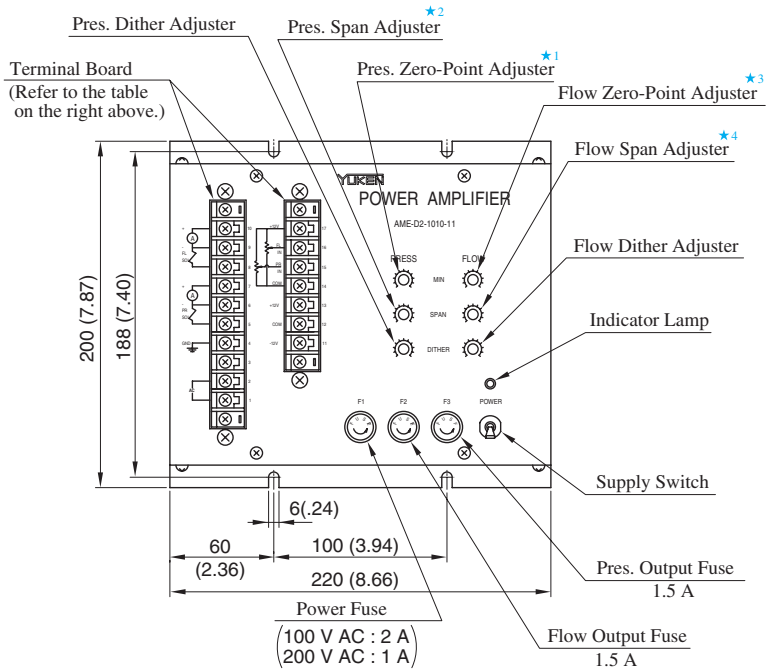

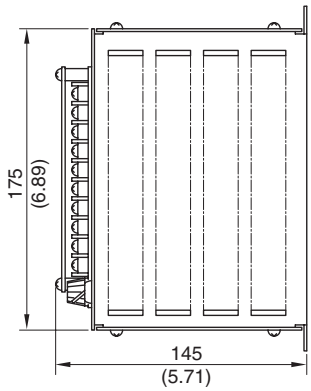

★1. Minimum Pressure Setting
★2. Variable Pressure Range Setting
★3. Minimum Flow Setting
★4. Variable Flow Range Setting

DIMENSIONS IN MILLIMETRES (INCHES)

Power Amplifiers
For Shockless Type Directional and Flow Control Valves

These power amplifiers are used to drive the shockless type proportional and flow control valves.

Model Number Designation

AMN	-G	-10
Series Number	Type of Function	Design Number
AMN	G : Shockless Directional and Flow Control Type	10
	W : DC Input Type	10

Applicable to Valve

Name of Valve	Model Numbers
Shockless Type Proportional Directional and flow Control Valves	EDFG-01

Specifications

Description \ Model Numbers		AMN-G-10	AMN-W-10
Max. Output Current		1.3 A (10 Ω Solenoid)	
Setting Resolution		0 – 99 % (1 % Units)	—
Number of Preselection Pattern		SOLa : 3 Patterns SOLb : 3 Patterns	—
Sequence Input	Input Current	10 mA/24 V	—
	Voltage Range	10 – 28 V	—
Maximum Input Voltage		—	–10 V DC : SOLa +10 V DC : SOLb
Input Impedance		—	10 kΩ
Maximum Gain		—	1.3 A/–5 V : SOLa 1.3 A/+5 V : SOLb
Dither		Variable (Internal)	
Slope Adjustment Range		0 – 99 %/Max. slope time	—
Maximum Slope Time		1 – 99 s	—
Delay Time Adjustment Range		—	0.1 – 3 s
Temperature Drift		0.2 mA /°C	
Power Supply		24 V DC (Power Supply Range : 20 – 30 V)	
Power Input		25 W	
Ambient Temperature		0 – 50°C (32 – 122°F)	
Ambient Humidity		90 % RH or less	
Approx. Mass		0.2 kg (.4 lbs.)	

Instructions

- **Power supply of the outside setting adjuster**
  When DC input type (AMN-W) power amplifier is used, power supply for the setting adjuster can be provided from this power amplifier, but for only one. However, please use the variable resistor or potentiometre of which impedance is 1 kΩ for the setting adjuster.

- **Supply Switch**
  The power amplifier has no power supply switch. As soon as it is connected to a power supply, it comes to be alive. Provide a power switch externally.

AMN-G-10

[Example Diagram]

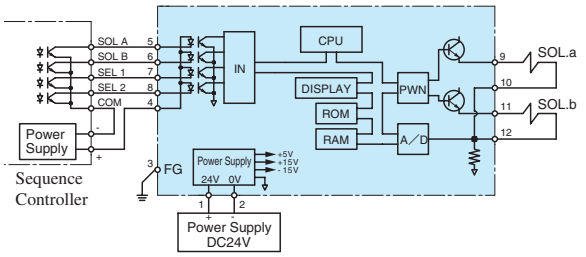

Detail of Terminal Board

Terminal Number	Name		Terminal Number	Name	
1	Power Supply	+24V	7	Sequence Input	SEL 1
2	Power Supply	0V	8	Sequence Input	SEL 2
3	Ground	G	9	Output to Valve Solenoid	SOL a
4	Sequence Input	IN COM	10		
5	Sequence Input	SOL A	11	Output to Valve Solenoid	SOL b
6	Sequence Input	SOL B	12		

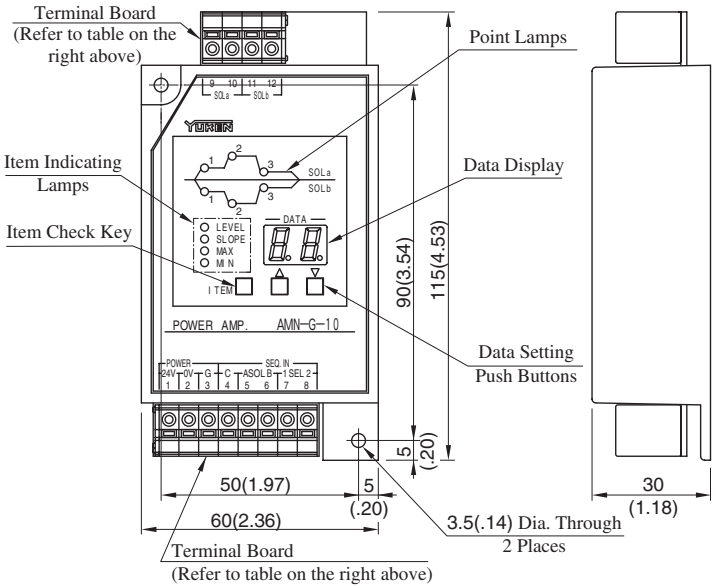

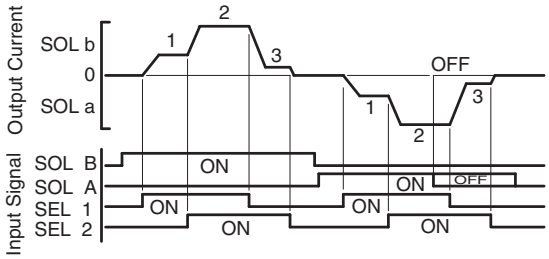

DIMENSIONS IN MILLIMETRES (INCHES)

AMN-W-10

[Example Diagram]

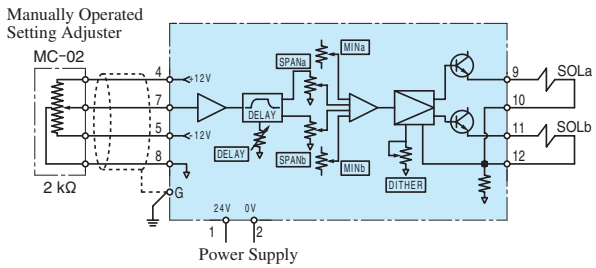

Detail of Terminal Board

Terminal Number	Name		Terminal Number	Name	
1	Power Supply	+24V	7	Input Signal	IN
2	Power Supply	0V	8	Input Signal	COM
3	Ground	G	9	Output to Valve Solenoid	SOL a
4	Internal Power Supply	+12V	10		
5	Internal Power Supply	−12V	11	Output to Valve Solenoid	SOL b
6	———		12		

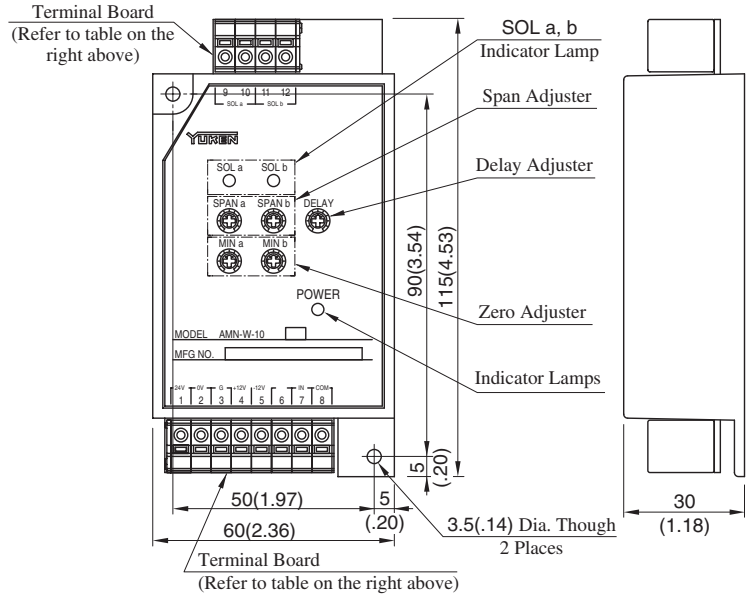

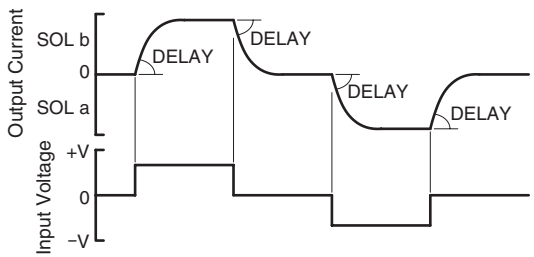

DIMENSIONS IN MILLIMETRES (INCHES)

H Power Amplifiers

Power Amplifiers For Directional and Flow Control Valves

These power amplifiers are used to drive the proportional electro-hydraulic directional and flow control valves.

Model Number Designation

SK1091	-D24	-10
Series Number	Power Supply	Design Number
SK1091	**D24**: 24 V DC	**10**

Applicable to Valve

Name of Valve	Model Numbers
Directional and Flow Control Valve	EDFHG- 03, 04, 06

Specifications

Description \ Model No.	SK1091-D24-10
Max. Output Current	1 A (10Ω Solenoid)
Max. Input Voltage	–10 V DC for SOL a +10 V DC for SOL b
Input Impedance	10 kΩ
Max. Gain	1 A / ±5 V
Dither	Variable
Delay Time Adjustment Range	0.15-3 s
Temperature Drift (Max.)	0.2 mA /°C
Power Supply	24 V DC (21-28 V Included Ripple)
Required Current	1.5 A or more
Power Input (Max.)	25 W
Ambient Temperature	0-50°C (32-122°F)
Ambient Humidity	90%RH or less
External Setting Resistance	2 kΩ
Approx. Mass	1.0 kg (2.2 lbs.)

Instructions

- **Power Supply for the Setting Adjuster**
  Power supply for the setting adjuster can be provided from this power amplifier, but for only one. However, please use the variable resistor or potentiometre of which impedance is 2 kΩ for the setting adjuster.
- **Power Switch**
  The power amplifier has no power supply switch. As soon as it is connected to a power supply, it comes to be alive. Provide a power switch externally.

SK1091-D24-10

[Example Diagram]

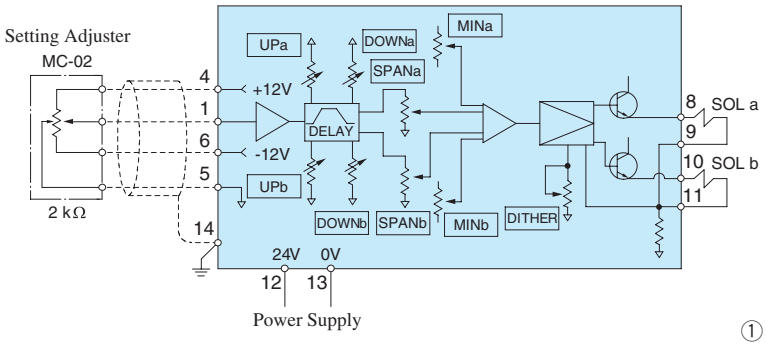

[Input-Output Characteristics]

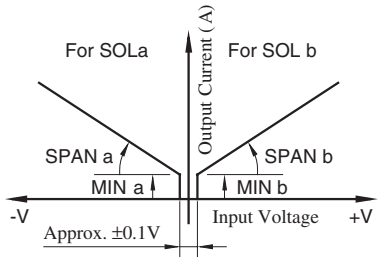

[Delay Function]

① In case "1" and "2" Input signal terminals are used.

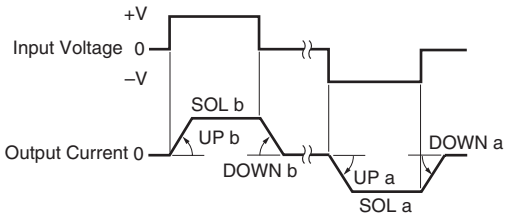

② In case "3" and "2" Input signal terminals are used.

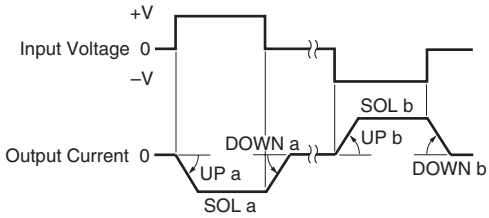

③ In case "1" , "2" and "3" Input signal terminals are used.

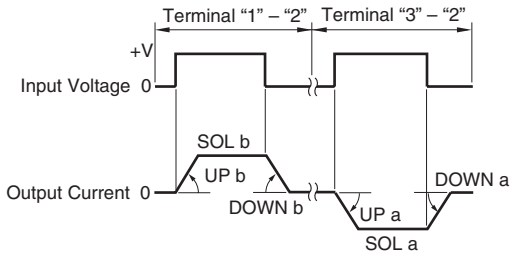

● Detail of Terminal Board

Terminal Number	Name	
1	Input Signal	IN★
2	Input Signal	COM
3	Input Signal	IN★
4	Power Supply for Setting Adjuster	+12V
5	Power Supply for Setting Adjuster	COM
6	Power Supply for Setting Adjuster	–12V
7	—	
8	Output to Valve Solenoid	SOL a
9		
10	Output to Valve Solenoid	SOL b
11		
12	Power Supply	24 V
13	Power Supply	0 V
14	Frame Ground	FG

★ Three (3) usages are available as shown ① to ③ of "Delay Function" at right hand side for Input signal terminal (IN).

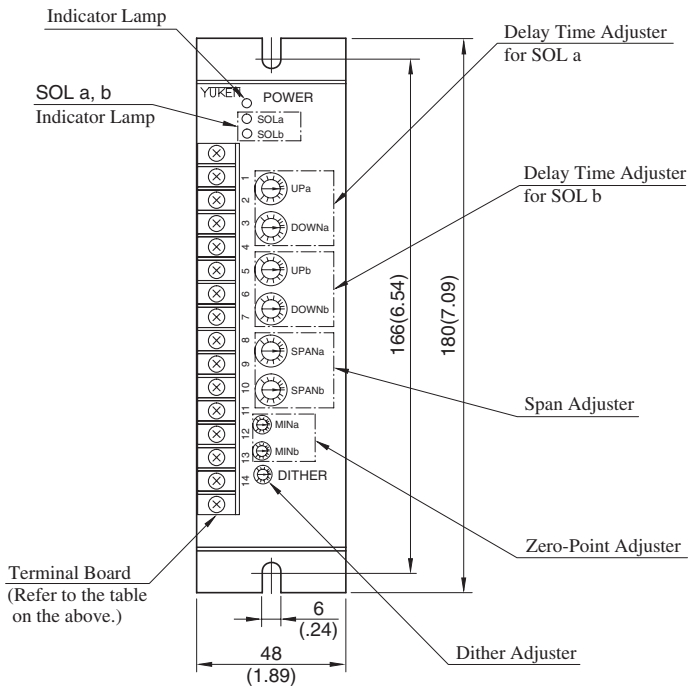

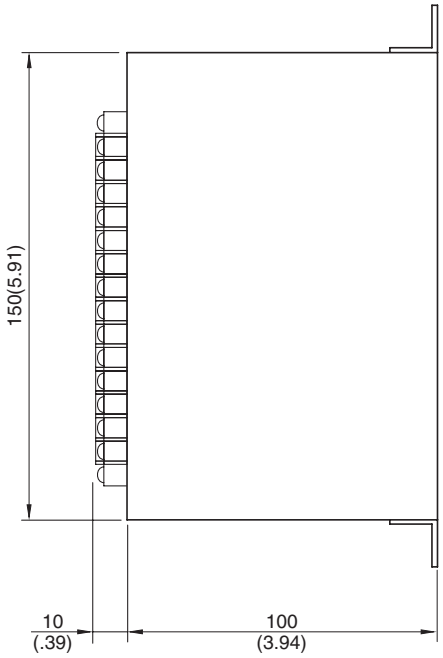

H
Power Amplifiers

Power Amplifiers
For High Response Type Directional and Flow Control Valves

These power amplifiers are used to drive the high response type proportional electro-hydraulic directional and flow control valves.
A compact AMN-L model and a euro card type AMB-EL model are available.
The single height [3U: 100 × 160 mm (3.94 × 6.30 in.)] is employed for the euro card size of the AMB-EL model.

AMN-L

AMB-EL

Model Number Designation

AMN-L

AMN	-L	-01	-3	-2P	-10
Series Number	Type of Function	Size of Applicable Valve	Compensation	Applicable Spool Type	Desigen Number
AMN	**L**: DC Input Type Directional and Flow Control with Miner feedback	**01**: 01 Size	**1**: Type 1	**None**: 3C2, 3C40	**10**
			3: Type 3	**2P**: 3C2P	

AMB-EL

AMB	-EL	-03	-2P	-1	-10
Series Number	Type of Function	Size of Applicable Valve	Applicable Spool Type	Compensation	Desigen Number
AMB	**EL**: DC Input Type Directional and Flow Control with Miner feedback	**01**: 01 Size	**None**: 3C2, 3C40 **2P**: 3C2P	★1	**10**
		03: 03 Size		**1**: For flow rate 40/80 L/min (10.6/21.1 U.S.GPM)	
		04: 04 Size		**2**: For flow rate 280 L/min (74.0 U.S.GPM)	
		06: 06 Size		**3**: For flow rate 350 L/min(92.5 U.S.GPM) **4**: For flow rate 500 L/min(132 U.S.GPM)	

Please refer to us for ★1.

Specifications

Description \ Model Numbers	AMN-L-01-1	AMN-L-01-3-2P	AMB-EL-01	AMB-EL-03	AMB-EL-04	AMB-EL-06
Max. Output Current	2.5 A (3.9 Ω Solenoid)		2.5 A (3.9 Ω Solenoid)	3.0 A (3 Ω Solenoid)	2.5 A (3.9 Ω Solenoid)	
Max. Input Voltage	+10 V DC: P→B→A→T –10 V DC: P→A→B→T		±10 V / ±5 V			
Input Impedance	10 kΩ or more		100 kΩ (50 kΩ in single-end mode)			
Slope-off input	Terminal Number 13-14 Short	——	4 – 28 V			
Slope Adjust Time	0.03 – 5 s	——	0.05 – 5 s (Slope Adjustment function is not available with "AMB-EL-∗-2P"			
Monitor Voltage	±1.5 V / ±3 mm st.		±10 V / rated st.			
Alarm	Open Collector (30 V DC, 10 mA Max.)		Open Collector (30 V DC, 10 mA Max.)			
Supply Voltage Rage	24 V DC (20 – 30 V DC)		24 V DC (21 – 28 V DC)			
Power Input	75 W		30 W	40 W	30 W	
Ambient Temperature	0 – 50 °C (32 – 122 °F)		0 – 50 °C (32 – 122 °F)			
Ambient Humidity	90 % RH or less		85 % RH or less			
Connector	——		DIN 41612 – F32			
Approx. Mass	0.3 kg (.66 lbs.)		0.28 kg (.62 lbs.)		0.34 kg (.75 lbs.)	

Applicable to Valve

Power Amplifiers Model Numbers	Valve Model Numbers
AMN-L	ELDFG-01
AMB-EL	ELDFG-01/03 ELDFHG-04/06

Instructions

Power Switch

The power amplifier has no power supply switch. As soon as it is connected to a power supply, it comes to be alive.
Provide a power switch externally.

AMN-L-01-1-10

[Example Diagram]

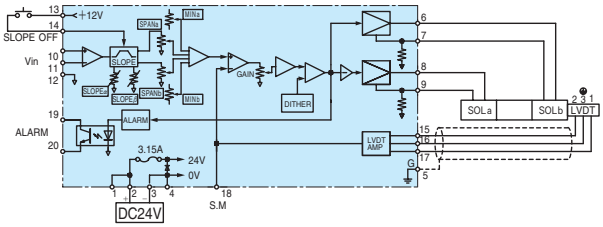

Detail of Terminal Board

Terminal Number	Name		Terminal Number	Name	
1	Power Supply	CAPACITOR(+)	11	Input Signal	–IN
2	Power Supply	+24V	12	Input Signal	COM
3	Power Supply	0V	13	Slope Control ON/OFF Terminal	SLOPE Vcc
4	Power Supply	CAPACITOR(–)	14	Slope Control ON/OFF Terminal	SLOPE OFF
5	Frame Ground	G	15	LVDT Terminal	CAR.
6	Output to Valve Solenoid	SOL b	16	LVDT Terminal	COM
7			17	LVDT Terminal	SIG.
8	Output to Valve Solenoid	SOL a	18	Sensor Moniter Output	S.M
9			19	Alarm Output	ALM(C)
10	Input Signal	+IN	20	Alarm Output	ALM(E)

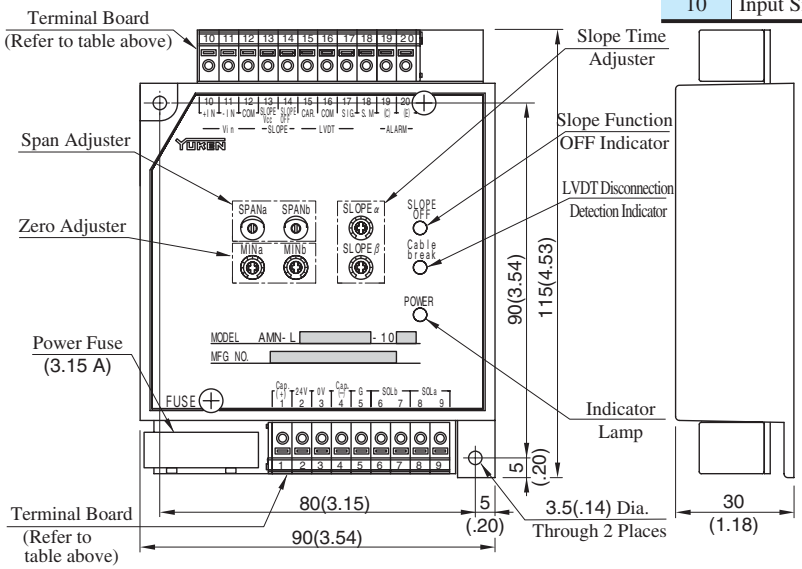

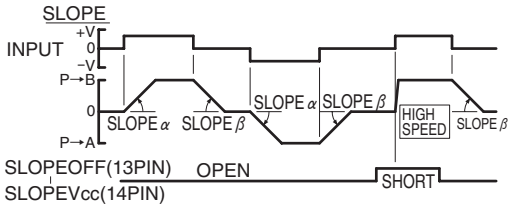

DIMENSIONS IN MILLIMETRES (INCHES)

AMN-L-01-3-2P-10

[Example Diagram]

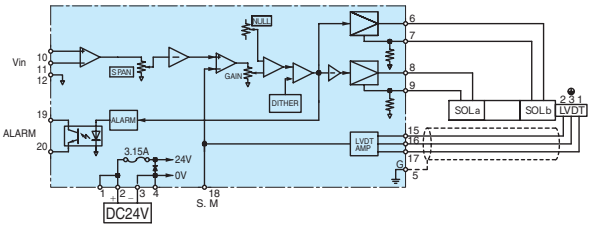

Detail of Terminal Board

Terminal Number	Name		Terminal Number	Name	
1	Power Supply	CAPACITOR(+)	11	Input Signal	–IN
2	Power Supply	+24V	12	Input Signal	COM
3	Power Supply	0V	13	———	
4	Power Supply	CAPACITOR(–)	14	———	
5	Frame Ground	G	15	LVDT Terminal	CAR.
6	Output to Valve Solenoid	SOL b	16	LVDT Terminal	COM
7			17	LVDT Terminal	SIG.
8	Output to Valve Solenoid	SOL a	18	Sensor Moniter Output	S.M
9			19	Alarm Output	ALM(C)
10	Input Signal	+IN	20	Alarm Output	ALM(E)

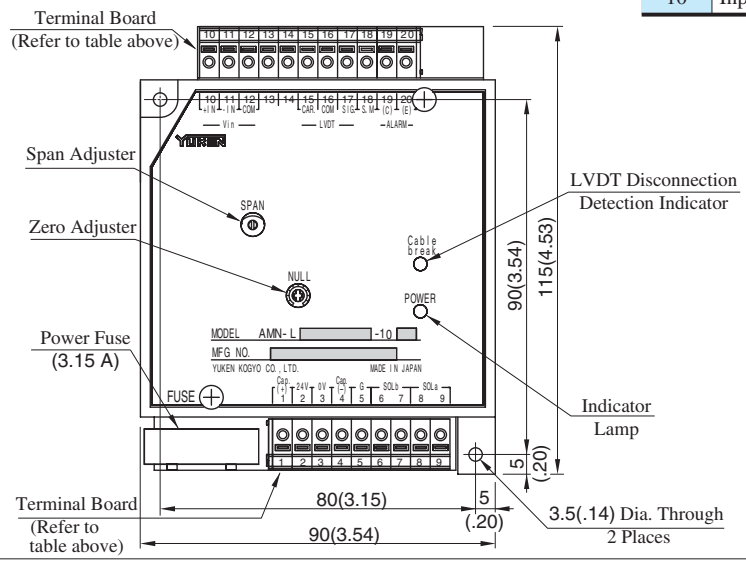

DIMENSIONS IN MILLIMETRES (INCHES)

H
Power Amplifiers

AMB-EL-∗-∗-∗-10

This power amplifier requires connector cards for connection. A connector card attached model is also available.
Please ask for details if interested.

Pin Connections and Functions

Pin Number	Name		Pin Number	Name	
b02	Power Supply 0V		z02	sol a(+)	
b04	Power Supply 0V		z04	sol a(–)	
b06	sol b(+)		z06	———	
b08	sol b(–)		z08	———	
b10	———		z10	Command Input (+)	
b12	———		z12	Command Input (–)	
b14	COM		z14		
b16	Power Supply +24V		z16	COM (No.2)	Conected to main valve sensor. See "Snsor Connecton"
b18	Power Supply +24V		z18	Carrier (No.3)	
b20	Slope Off		z20	Signal (No.1)	
b22	COM (No.3)	Conected to pilot valve sensor. See "Snsor Connecton"	z22	———	
b24	Signal (No.1)		z24	Alarm Output (–)	
b26	Carrier (No.2)		z26	Alarm Output (+)	
b28	Output 24V		z28	Stroke Monitor Signal (P)	
b30	Output 24V		z30	Stroke Monitor Signal (S)	
b32	FG		z32	———	

DIMENSIONS IN MILLIMETRES (INCHES)

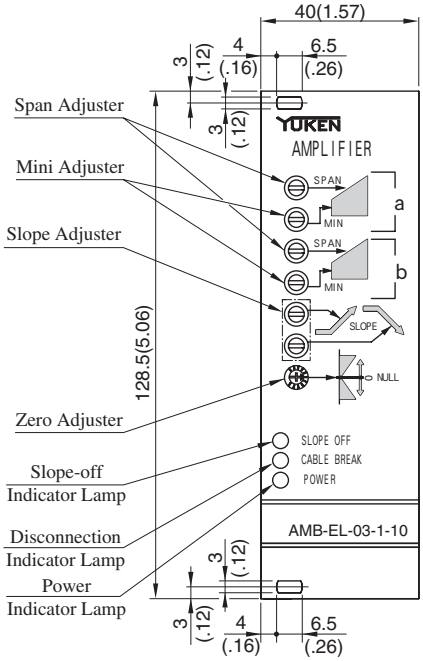

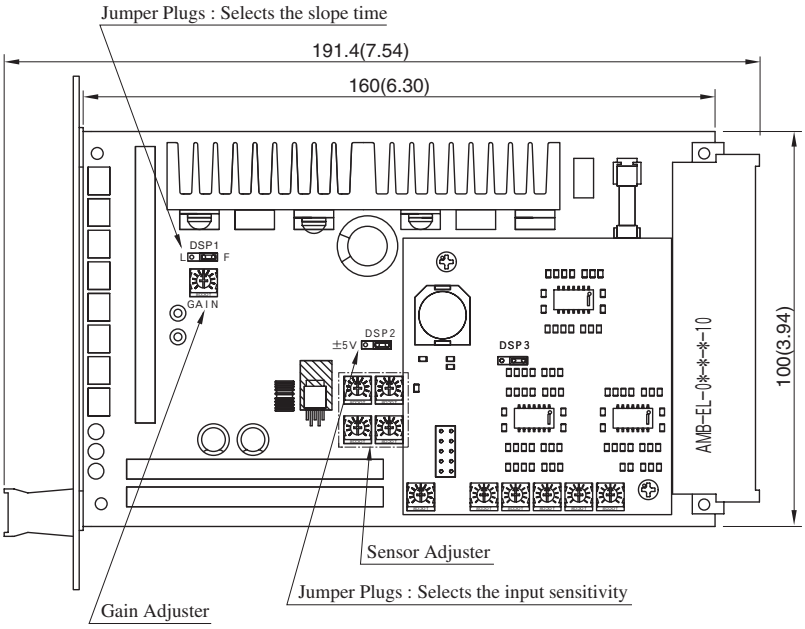

Sensor Connection

Main Valve Sensor

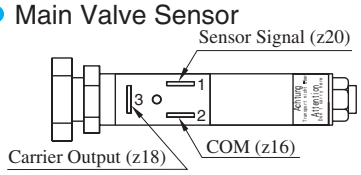

Pilot Valve Sensor

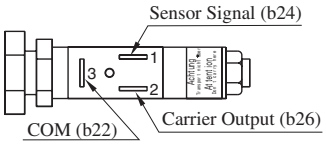

Lamp Pattern

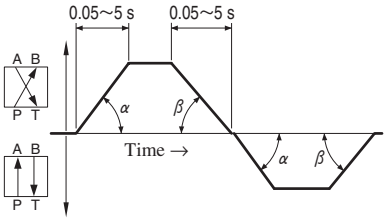

Setting Adjusters

The setting adjuster supplies the command signal voltage to the power amplifier. Since the setting adjuster is closely related to actual machine operating procedure, the user generally provides this device. Yuken makes the following standard setting adjusters for general use and designs and manufactures special setting adjusters to order.

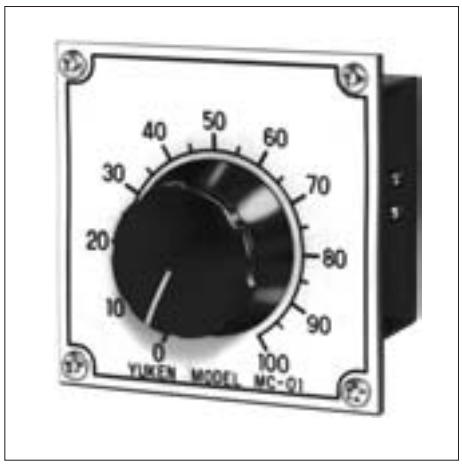

Type	Model Number	Function
Manually Operated Setting Adjuster	MC-01	This is the simplest setting adjuster, consisting of a trimmer (1 kΩ) and a dial.
	MC-02	Consisting of a centre-tapped trimmer (1 kΩ - 1 kΩ) and a dial, this setting adjuster is ideal for a servo system.
6-point Setting Adjuster	AMC-V6-S-∗-10	Six trimmers are incorporated, so it is possible to set six points.
Multifunction Slope Controller	AMC-T-20	This multifunction slope controller generates any desired two-channel analog voltage patttern outputs. It can also be used with slope-proportional and time-proportional systems.
Slope Controller	AMN-T-10	Slope and output can be set optionally 4-bit signal.

Manually Operated Setting Adjuster

MC-01

[Electric Circuit]

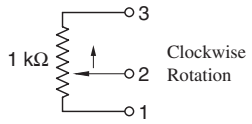

[Example Diagram]

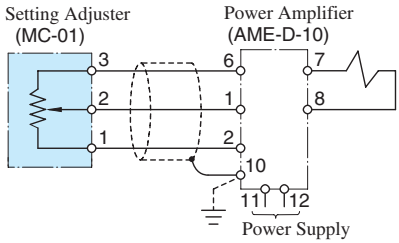

[Mounting Panel]

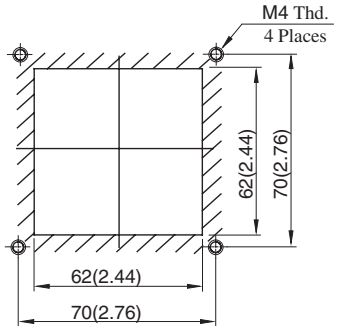

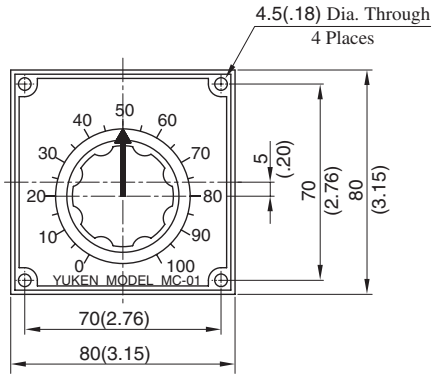

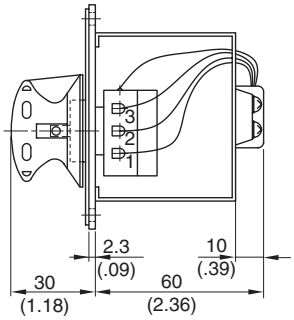

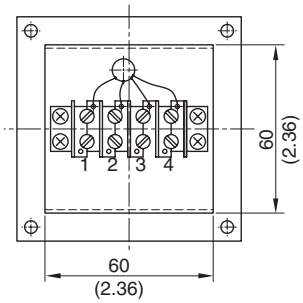

DIMENSIONS IN MILLIMETRES (INCHES)

MC-02

[How to Use]

This setting adjuster is for using positive and negative voltages to the right and left of the zero point. Most suitable for servo systems. Please contact us for usage details.

[Electric Circuit]

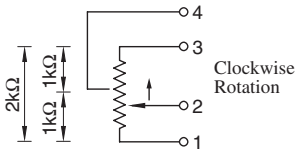

[Example Diagram]

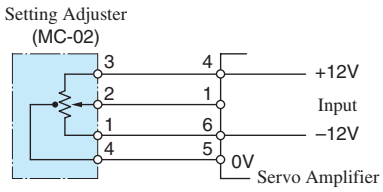

[Mounting Panel]

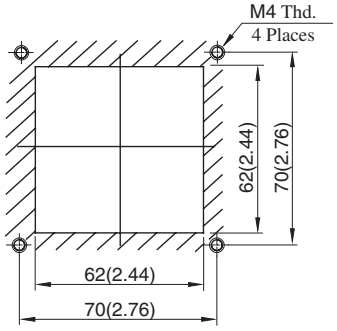

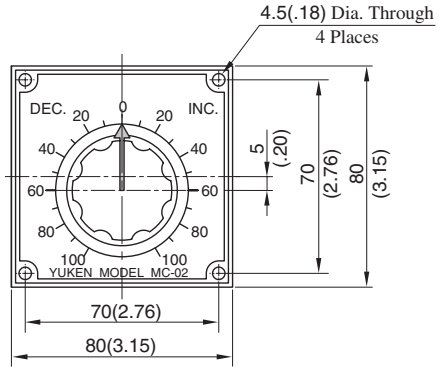

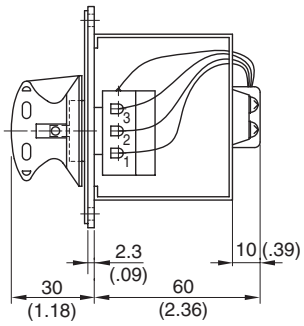

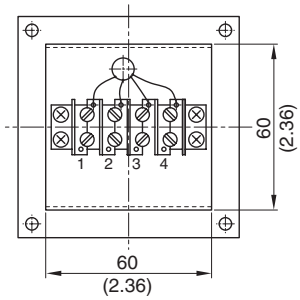

DIMENSIONS IN MILLIMETRES (INCHES)

6-Point Setting Adjuster

AMC-V6-S-∗-10

Power Supply
100 ..... 100 VAC
200 ..... 200 VAC
220 ..... 220 VAC

[Electric Circuit]

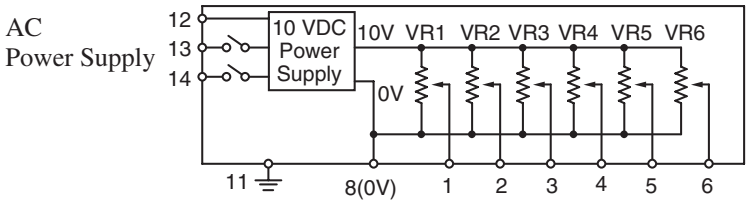

● Detail of Terminal Board

Terminal Number	Name
1	1 OUT (VR1)
2	2 OUT (VR2)
3	3 OUT (VR3)
4	4 OUT (VR4)
5	5 OUT (VR5)
6	6 OUT (VR6)
7	—
8	0V COM
9	—
10	—
11	Ground G
12	Power Supply 85 – 265 VAC
13	
14	

[Example Diagram]

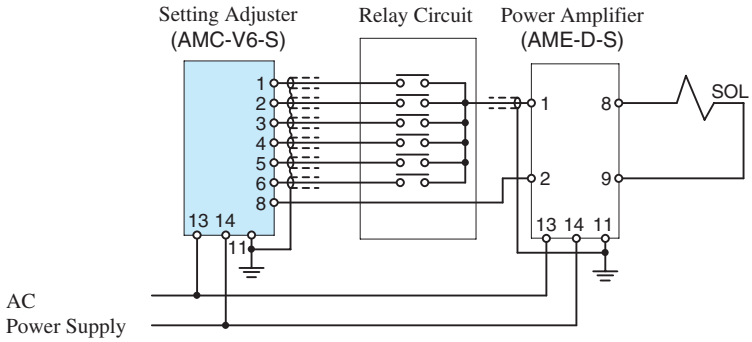

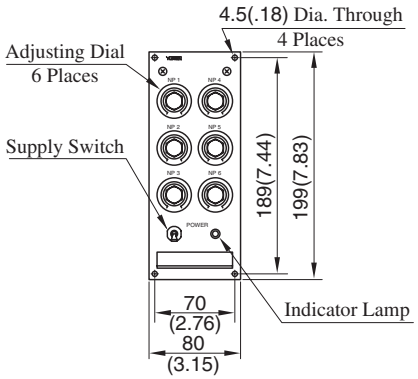

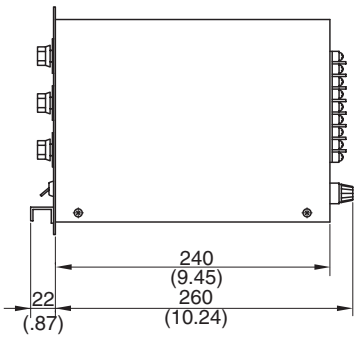

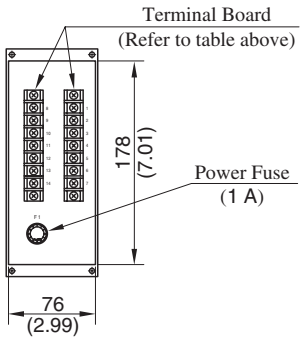

DIMENSIONS IN MILLIMETRES (INCHES)

H
Setting Adjusters

Multifunction Slope Controllers

This controller can generate any desired two-channel analog voltage pattern outputs and can be used with slope-constant and time-constant systems. Although two-channel outputs can be used independently, this controller can also be used as a setting adjuster for the EH Series variable piston pumps.

Model Number Designation

AMC	-T	-20
Series Number	Type of Function	Design Number
AMC: Setting Adjuster	**T** : Acceleration/deceleration signal type (Slope Controller)	**20**

Specifications

Model No. / Description	AMC-T-20
Number of Output Channels	2 channels (A, B)
Maximum Output Range	0 - +5 V ★, 0 - ±5 V, 0 - +10 V, 0 - ±10 V (The settings are DIP switch selectable)
Two Categories of Slopes	Slope-constant ★ With a level change, the slope will not change (but arrival time changes.) Time-constant With a level change, the time will not change (but the slope changes.) (to be selected by DIP switch)
Acceleration/Deceleration Signal Type	4 Types: Polygonal Line Signal ★ : 1 Type; Curve Compensation Signal : 3 Types (to be selected by DIP switch)
Max. Slope Time	5 s ★, 20 s, 50 s, 100 s (The settings are DIP switch selectable)
Setting Resolution	The level and slope settings are variable in 0.1% units from 0 to ±99.9%
Control Mode Number of Preselected Patterns	Mode 1, 4-bit binary code input, 15 patterns Mode 2, 6-bit binary code input, 63 patterns Mode 3, Timer control, 9 patterns (4 variations)
Stop Mode (Applicable Only for Control Mode 1)	ON : The stop mode is to retain the state of controller output at the instant an external input signal is interrupted. When the external signal is input again, the operation is resumed from the retained state. OFF ★ : When external input signal is interrupted, function goes back to the initial setting (Pattern No.0).
Control Input Signal	Current input type, 10 mA /bit max. Usable as a voltage input type (voltage range: 8 to 48V DC) Photocoupler insulation input
Control Output Signal	Output from transister open collector Max. 30V, 50 mA
Data Save	EEP-ROM (Battery not needed)
Power Supply	100/200 V AC, 50/60 Hz (85-260 V AC)
Power Input	10 VA or less
Ambient Temperature	0-50˚C (32-122˚F)
Ambient Humidity	85%RH or less (Bedewing must be avoided)
Approx. Mass	1 kg (2.2 lbs.)

Note: ★ Indicates preset conditions.

Instructions

- Since this controller incorporates a micro computer, do subject it to undue electrical noise.

Control Modes

One among the following three types of control modes can be chosen by changing DIP swicth.

Control Mode 1

Channels A and B generate optional slopes independently each other.

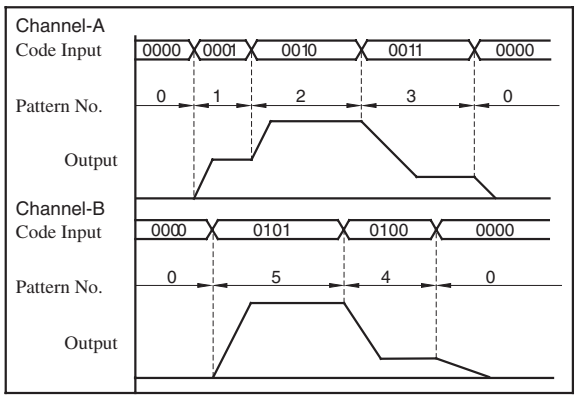

Control Mode 2

A slope is generated by a strobe signal (signal for change to next signal). Channels A and B operate synchronously.

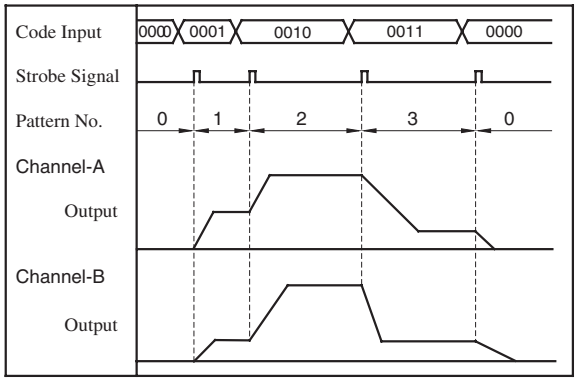

Control Mode 3

The internal timer is activated by a start signal, causing the slopes to be generated successively in memory.

Channels A and B operate independently.

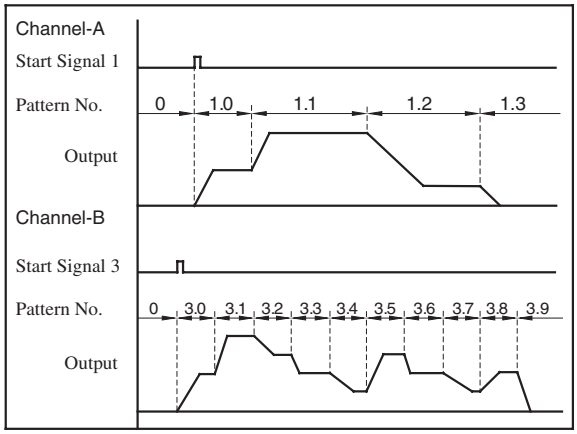

Setting Example

Control Mode 1 Channel - A

Code Input				Pattern No.	Setting %		Remarks
A8	A4	A2	A1		Level	Slope	
OFF	OFF	OFF	OFF	0	0	0	Stop
OFF	OFF	OFF	ON	1	99.9	40.0	Cylinder forward acceleration
OFF	OFF	ON	OFF	2	-80.0	60.0	Cylinder backward acceleration
OFF	OFF	ON	ON	3	10.0	50.0	Cylinder forward deceleration
~~	~~~~	~~~~	~~~~	~~~~	~~~~	~~~~	~~~~
ON	ON	ON	ON	15	10.0	10.0	

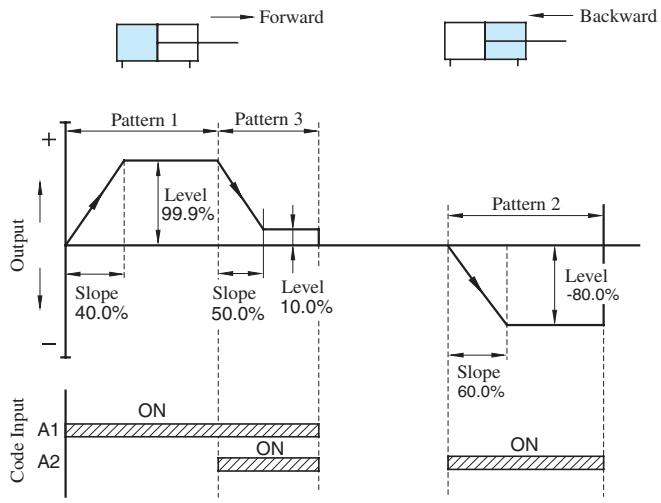

Slope Type

One among the follwing four types can be chosen by changing DIP switch.

Type 1

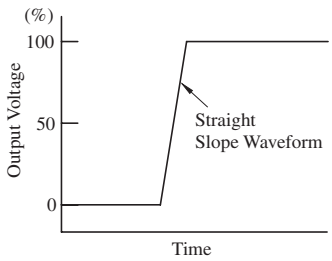

Type 2

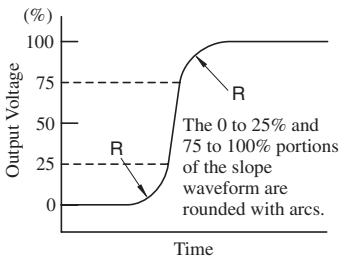

Type 3

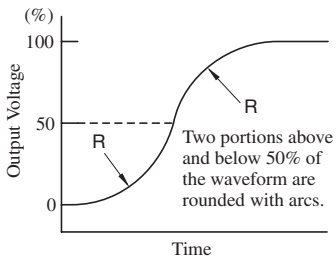

Type 4

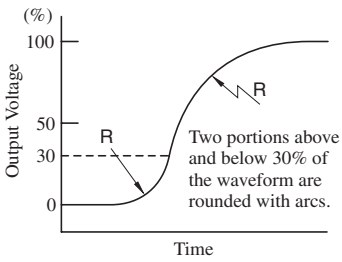

AMC-T-20

[Example Diagram]

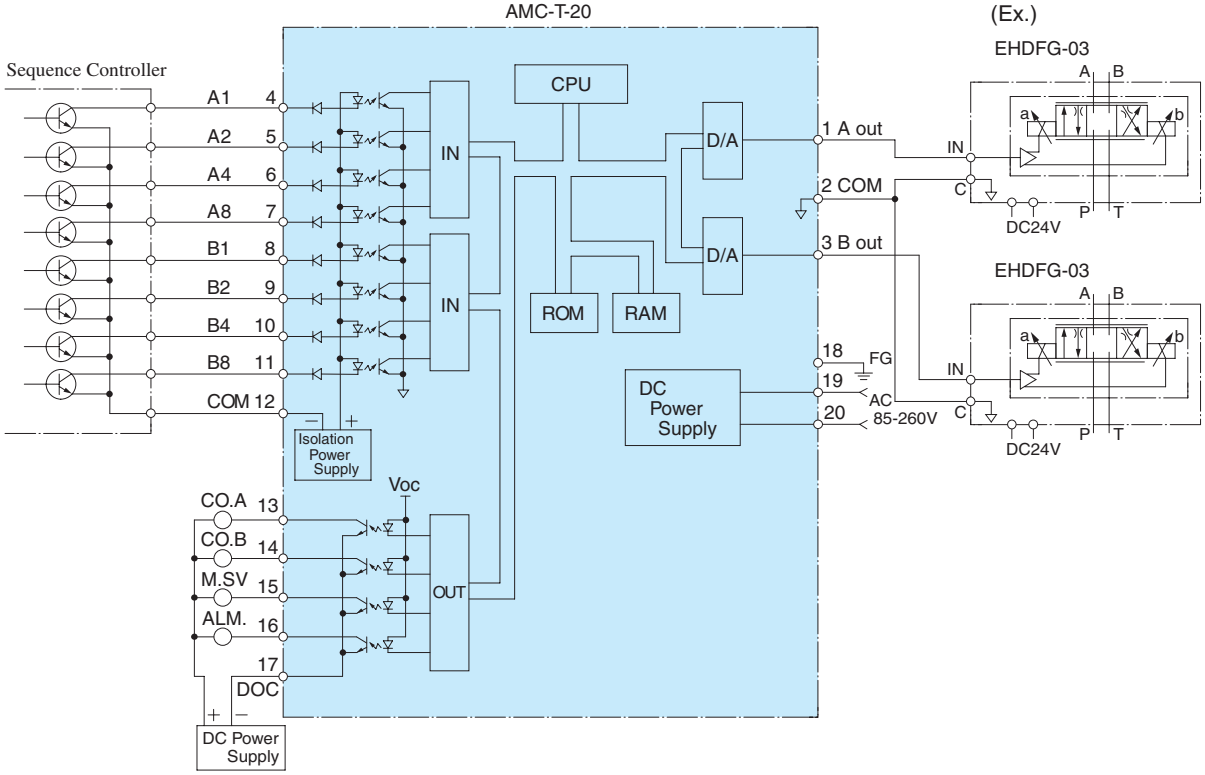

Detail of Terminal Board

Terminal Number	Name		Terminal Number	Name	
1	Channel A Output	A out	11	Code Input	B8
2	Common	COM	12	Code Input Common	DCOM
3	Channel B Output	B out	13	Coincidental Output Signal with "A"	CO.A
4	Code Input	A1	14	Coincidental Output Signal with "B"	CO.B
5	Code Input	A2	15	Data Save Signal	M.SV
6	Code Input	A4	16	Alarm Signal Output	ALM.
7	Code Input	A8	17	Output Common	DOC
8	Code Input	B1	18	Frame Ground	FG
9	Code Input	B2	19	Power Supply	AC
10	Code Input	B4	20		

DIMENSIONS IN MILLIMETRES (INCHES)

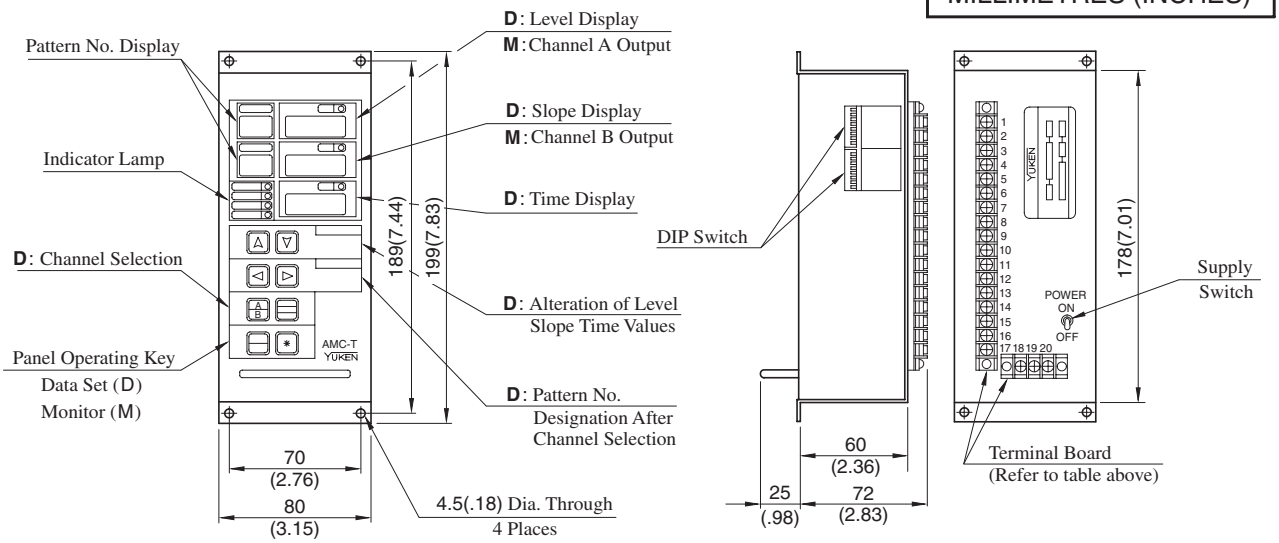

Interchangeability between Current and New Design

Specifications

Specifications unchanged unless specified below.

Description \ Model No.	New : AMC-T-20	Current : AMC-T-10
Control Output Signal	Output from transister open collector Max. 30 V, 50 mA	Output from transister open collector Max. 30 V, 10 mA
Slope Types	4 Types Polygonal Line Signal : 1 Type Curve Compensation Signal : 3 Types (to be selected by DIP switch)	1 Type : Polygonal Line Signal
Stop Mode (Applicable only for Control Mode 1)	ON, OFF	——
Data Save	EEP-ROM Battery not needed	Battery Required
Approx. Mass	1 kg (2.2 lbs.)	1.8 kg (4.0 lbs.)

Terminal

The following are differences between current and new.

Terminal Number	Name		Remarks
	New : Design 20	Current : Design 10	
13	Coincidental Output Signal with "A" "CO.A"	Coincidental Output Signal with "A" "DO1"	Abbreviation of the terminals are changed, though functionally the same.
14	Coincidental Output Signal with "B" "CO.B"	Coincidental Output Signal with "B" "DO2"	
15	Data Save Signal "M.SV"	——	Added new functions.
16	Alarm Signal Output "ALM."	——	

Interchangeability in Installation

There is an interchangeability in installation, although depths (dimensions "**A**" and "**B**") are different.

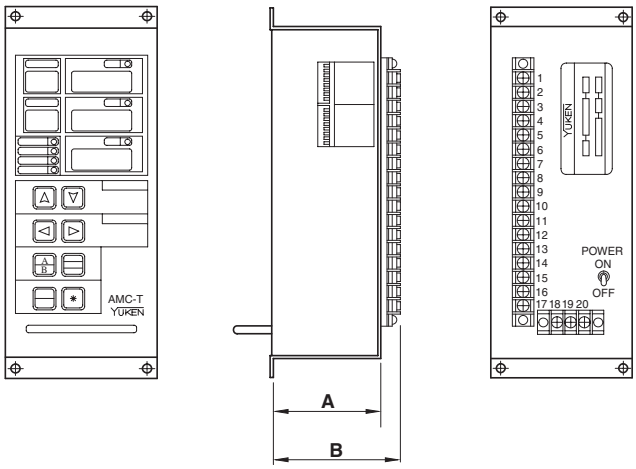

Model Numbers		mm (Inches)	
		A	B
Current	AMC-T-10	185 (7.28)	200 (7.87)
New	AMC-T-20	60 (2.36)	72 (2.83)

Slope Controllers

This slope controller is considerably smaller and lighter compared to conventional slope controllers.
4-bit switching signals allow the pattern output of given levels and acceleration/deceleration times. One-touch disconnection is supported. The mass and the volume have been reduced to one-fifth and one-fourth, respectively.

Model Number Designation

AMN	-T	-10
Series Number	Type of Function	Design Number
AMN	T : Slope Controller	10

Specifications

Model Numbers / Description	AMN-T-10
Number of Output Channels	1 channel
Maximum Output Range	0 – +5 V (Factory Preset) 0 – +10 V ±5 V ±10 V
Maximum Slope Time	● Slope-constant type: ★1 1-9999 s/Max. Output signal (Factory Setting, 5 s) ● Time-constant type: ★2 1–9999 s (Can be set in 1 second increments)
Acceleration/Deceleration ★3 Signal Type	Polygonal Line Signal: 1 Type (Factory Setting) Curve Compensation Signal: 3 Type
Setting Resolution	The level and slope setting are variable in 0.1 % units from 0 to ±99.9%
Number of Preselected Patterns	4-bit binary code input 15 patterns
Sequence Input	Input Current: 10 mA/24 V Voltage Range: 10 – 28 V
Sequence Output	Load Current: Max. 50 mA Supply Voltage: Max. 32 V
Power Supply Voltage	24 VDC (20 – 30 VDC)
Power Input	3 W
Ambient Temperature	0 – 50 °C (32 – 122 °F)
Ambient Humidity	90 % RH or less
Approx. Mass	0.2 kg (.44 lbs)

★1. A fixed slope means that the slope endpoint time changes while the slope gradient remains unchanged when the level is changed.
★2. A fixed time means that the slope endpoint time remains unchanged when the level is changed.
★3. The same slope types as those for the multifunction slope controller are supported. See page 789 for details.

Instructions

● Since this controller incorporates a micro computer, do subject it to undue electrical noise.

AMN-T-10

DIMENSIONS IN MILLIMETRES (INCHES)

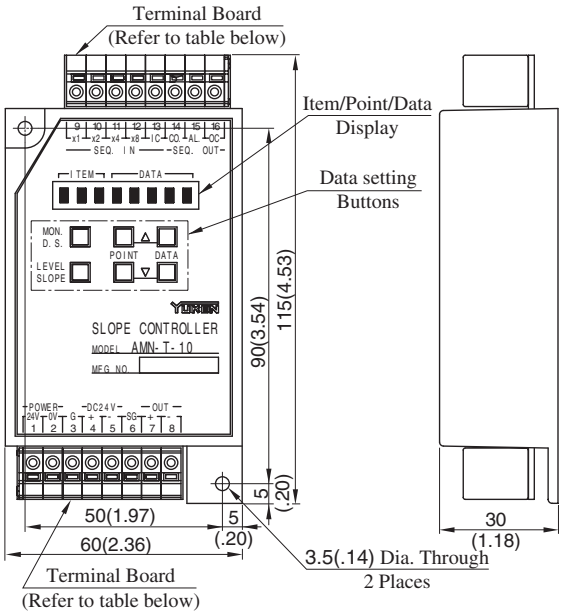

Detail of Terminal Board

Terminal Number	Name		Terminal Number	Name	
1	Power Supply	+24V	9	Sequence Input	×1
2	Power Supply	0V	10	Sequence Input	×2
3	Frame Ground	G	11	Sequence Input	×4
4	Internal Power Supply	+24V	12	Sequence Input	×8
5	Internal Power Supply	0V	13	Sequence Input	IN COM
6	Signal Ground	SG	14	Sequence Output	COL N.
7	Output Signal	+	15	Sequence Output	ALARM
8	Output Signal	–	16	Sequence Output	OUT COM
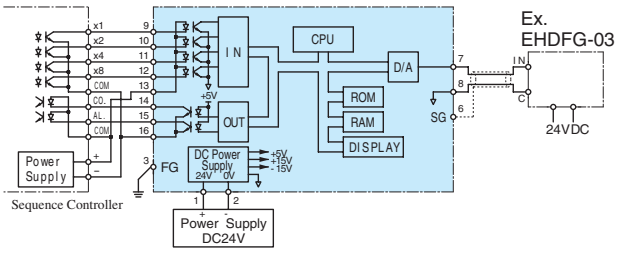
[Example Diagram]